ADDENDUM NO. 3
TO THE
CONTRACT DOCUMENTS

FOR

BRACKISH WATER DESALINATION PROJECT
P.W. 694

ISSUED
November 5, 2020

Bidders shall acknowledge receipt of this Addendum and all other Addenda issued by the City in Article II of the Bid Form, Section 00400. A Bid may be deemed non-responsive if receipt of all Addenda issued by the City are not acknowledged.

<u>SEE ATTACHED ADDENDUM ITEMS</u>

Approved By: _____
Scott Buenting, P.E.

ADDENDUM NO. 3

Brackish Water Desalination Project
PW 694

Issued November 5, 2020

1. Add the following new specification sections to the bid documents:
   a. 11221 – Flash and Rapid Mixing Equipment.
   b. 11256 – Polymer Blending and Feed Equipment: Dry.
   c. 17311 – Flow Measurement: Venturi Flowmeters.

2. APPENDICES:
   a. Add attached "Appendix A – Encroachment Permits" and Cover page:
      1) City of Pittsburg Standard Permit Application and Conditions.
   b. Add the attached design drawings for existing Plant A tube settlers and existing River Pump Station to Appendix J (22 dwgs) and cover.
   c. Add attached "Appendix K – Sample City Use Agreement" (pp. 1 to 5) and cover.
   d. Add attached new "Appendix L – River Pump Station Site - Soil and Groundwater Data and Delta Diablo WWTP Sewer Discharge Limits. (13 pages) and cover.

3. Section 00400 – Bid Forms:
   a. Attachment E, Replace Major Equipment or System Schedule Supplied by Contractor with the attached updated schedule.
   b. Attachment J, Certification of Electrical Subcontractor's Experience and Qualifications:
      1) Modify the last sentence of the heading as follows:

         "(To Be Submitted with Bid no later than 3 pm the day Bids are due)"

4. Section 00510 – Agreement:
   a. Change the Approximate Quantity for Item Numbers 13, 14, and 15 to "1 Job".
   b. Change the Unit for Item Numbers 13, 14, and 15 to "Lump Sum".

5. Section 00800 – Supplementary General Conditions:
   a. Add the following at the end of paragraph 1.1: "The Milestone Dates listed below are based on the City issuing Notice to Proceed to the Contractor by

February 1, 2021. If the Notice to Proceed is delayed, the Milestone dates may be adjusted by the City if warranted."

6. Section 01060 – Regulatory Requirements and Permits:

   a. Paragraph 4.01.A, line 4, replace "Order No. XXX-DWQ, NPDES Permit No. XXX" with "Order No. R2-2015-0049, NPDES Permit No. CAS612008."

7. Section 01140 – Work Restrictions:

   a. Paragraph1.04.B.3, insert at end:

      "o. Install raw water static mixer vault.

      p. Line existing 24" CI pipe in clearwell."

   b. Paragraph1.04.B.8, insert at end:

      "d. Tie-in to existing 6" FW pipeline at the WTP."

8. Section 01200 – Measurement and Payment:

   a. Add the following at the end of paragraph 1.03.B.1.n:

      "Discharge to the sewer shall be limited to 100 gpm. Contractor shall obtain a discharge permit from Delta Diablo prior to any discharge to the sewer. Refer to Appendix L for the sewer discharge permit application."

9. Section 01354 – Hazardous Material Procedures:

   a. Paragraph 1.04, insert at end:

      "G. Hazardous Materials Survey:

         1. Contractor shall hire a person who is certified by Cal/OSHA and has received AHERA training to conduct a Hazardous Materials Survey at the WTP and at the River Pump Station.
         2. Survey shall meet the requirements of BAAQMD, Regulation 11, Rule 2 and cover.
         3. At a minimum report shall cover asbestos-containing material, lead, and PCBs for areas of the WTP where demolition will be performed.
         4. Report must be submitted prior to any demolition or renovation work.
         5. For bidding purposes, contractor shall assume no hazardous materials."

10. Section 01500 – Temporary Facilities and Controls:

    a. Paragraph 1.03, insert at end:

       "C. For temporary piping systems (if needed):

          1. Submit layout drawings showing proposed routing of piping, including proposed pipe support and pipe restraint locations.
          2. Submit product data for piping, fittings, appurtenances, restraints, supports, and all other components of the temporary piping system."

b. Paragraph 1.11, insert at end:

"1.12 TEMPORARY PIPING (IF NEEDED)

B. CONTRACTOR shall provide all piping, appurtenances, and other materials as required to provide temporary piping systems as specified in this Section and as needed to perform the Work.

C. CONTRACTOR shall field route piping as needed and as field conditions dictate, and determine appropriate lengths of piping and quantity/type of pipe fittings needed to construct temporary piping system. Do not block access points such as driveways, and walkways to existing facilities unless approved in writing by the OWNER.

D. Restrain piping at valves and at fittings where piping changes direction, changes sizes, and at ends:
   1. When piping is buried, use concrete thrust block or mechanical restraints.
   2. When piping is exposed or under water, use mechanical or structural restraints.
   3. Determine thrust forces by multiplying the nominal cross sectional area of the piping by the operating pressure of the piping.

E. Temporary piping systems shall be installed in a manner that will not damage existing or new facilities.

F. Unless indicated otherwise, piping material, including gaskets, shall be suitable for potable water.

G. After temporary piping system is no longer required:
   1. Remove temporary piping system.
   2. Clean and repair damage caused by installation or use of temporary piping system.
   3. Restore existing facilities to original condition."

11. Section 01614 – Wind Design Criteria:

    a. 1.02 A.1.a. Risk Category III.

    b. 1.02 A.1.b, change "Wind Speed, Vult = 100 miles per hour."

    c. 1.02 A.1.b, change "Exposure Category: C."

12. Section 02260 – Excavation Support and Protection:

    a. Revise Section 1.04.B.J: "The contractor's shoring system shall be designed to prevent damage to existing adjacent facilities and shall be stiff enough to keep deflections to a practical minimum. Shoring system should also have structural adequacy to accommodate these deflections."

    b. Remove, Section 3.01.B.3.

13. Section 02351 – Steel Sheet Piping:

    a. Add, Section 1.06.A.2.f. "Contractor's means and methods for addressing potential leakage through shoring systems."

b. Add, Section 1.06.A.2.g. "Contractor's means and methods for protecting existing facilities."

c. Revise, Section 2.02.A as "Contractor shall implement appropriate measures to address leakage potential for leakage potential. Contractor's means and methods for addressing leakage shall be included in shoring submittals."

d. Revise, Section 3.02.A.1 "Settlement monitoring of existing bulkhead sheet piles near the boat launch."

e. Remove, Section 3.02.B.

14. Section 02700 – Cured-in-Place Pipe Rehabilitation – Full Structural (Pressure):

    a. Paragraph 1.04.E., replace "Contractor's" with "Manufacturer's".

    b. Delete paragraph 2.01.F in its entirety.

15. Section 03301 – Concrete Work:

    a. Paragraph 1.02: References ADD:
    "30. C989 - Standard Specification for Slag Cement for Use in Concrete and Mortars."

    b. Paragraph 1.04: Submittals, Insert:
    "4.c. 3) Slag cement: Identify source and provide testing results to demonstrate compliance with requirements of ASTM C989 and this Section."

    c. Paragraph 2.04: Concrete Mixes. B. Constituent Materials ADD:
    "1A. Blended hydraulic cement:
        a. In accordance with ASTM C595, Type IS(<70)(MS).
        b. Portland Cement Clinker Used In Manufacture of Portland-Pozzolan Cement: Type II.
        c. Pozzolan Content of Portland-Pozzolan Cement: Not exceed 15 percent by weight.
        d. Single source: To provide uniformity of appearance, for each structure use only 1 source, type, and brand of portland cement for walls and slabs that will be exposed in the finished work.
        e. Confirm adequate supply of cement over duration of project before making trial batches or beginning concrete placements.
        f. Cement for finishing: Provide cement from same source and of same type as concrete to be finished or repaired."
    "4.f. Slag cement:
        a. Grade 80, 100, or 120 in accordance with ASTM C989, except as modified below:
            1) Fineness: Amount retained on a No. 325 sieve: 20 percent maximum.
            2) Total alkalis Na2O + 0.658 K2O:
                a) Minimum: 0.60 percent.
                b) Maximum: 0.90 percent."

16. Section 11300 – Tube Settler Media:

    a. Insert the following at the end of paragraph 2.01A:

    "2. Enviropax, 3. Aqua Equipment Technologies LLC."

17. Section 11245 – Liquid Chemical Peristaltic Tube Metering Pumps:

a. Paragraph 1.04.C ADD the following:

"4. Polymer:

a. Dry chemical formula: Proprietary formula.
b. Solution concentration: 0.1 – 0.5 percent by weight.
c. Solution pH: 4 to 8.
d. Solution specific gravity: 1.0 to 1.1."

b. Paragraph 3.02.A, ADD the following to the table:

Tag Number	**PMP 61.1101** **PMP 61.1102**
Feed Point	Raw Water
Service	Polymer
Pump Type	Peristaltic Tubing
Number of Pumps	2
1st Named Manufacturer's Model	Blue-White Industries, M-4
Torsional Analysis	Not Required
Pump Characteristics	
Design Conditions	
Maximum Flow, (gallons per hour)	67.00
Minimum Flow, (gallons per hour)	3.00
Normal Flow, (gallons per hour)	20
Pump rpm	0.0125 – 125
Maximum Discharge Pressure (psi)	125
Minimum Suction Lift (feet)	30
Relief Valve Setting (psig)	Per plans
Pump Materials	
Pump Housing/Enclosure	413 Aluminum (Polyester powder coated)
Tubing	Flex-A-Prene
Rotor	Valox (PBT)
Pump Shaft	Chrome plated steel
Pump Housing Support	n/a
Pump Connections	Stainless Steel Flange
Driver Characteristics	
Driver Type	PWM type DC gear motor with integral controls
Drive Coupling	n/a
Minimum Driver Horsepower	0.25
Maximum Driver Speed, (rpm)	125
Service Factor	1
Voltage/Phases/Hertz	110 volt, 1 phase, 60 Hertz
NEMA Enclosure Type	NEMA 4X

Source Testing	
Test Witnessing	Not Witnessed
Performance Test Level	1
Vibration Test Level	None
Noise Test Level	None
Functional Testing	
Performance Test Level	1
Vibration Test Level	None
Noise Test Level	None

c. Paragraph 3.02.B, REPLACE the table with the following table:

Quantity	Service	Volume (mL)	Graduation Scale (mL)
1	Calcium Chloride	2000	50
1	Scale Inhibitor	100	10
1	Sodium Bisulfite	100	10
1	Polymer	4000	50

d. Paragraph 3.02.C, ADD the following to the table:

Tag Number	Service	Spring Range (PSI)	Relief Pressure (factory setting)
n/a	Polymer	5-125	75
n/a	Polymer	5-125	75

18. Section 11256 – Polymer Blending and Feed Equipment: Dry:

    a. ADD Section 11256 to the contract documents.

19. Section 11312D – Vertical Turbine Pumps:

    a. Add at the end of 2.01A: "3. Floway".

    b. Add at the end of 2.01B: "4. Floway".

    c. Add at the end of paragraph 2.02.A.2: "Only materials that are in contact with drinking water need to be ANSI/NSF 60 and 61certified. The entire pump assembly does not need to be ANSI/NSF 60 and 61 certified."

    d. Modify the first sentence of paragraph 2.11.A.2 as follows: "Listed driver horsepower is the minimum to be supplied, unless otherwise approved by the Engineer:"

    e. Remove paragraph 2.13-A, spare parts in its entirety.

    f. In the Pump Schedule in paragraph 3.02, modify the "Motor Voltage/Phases/Hertz" for Pumps 21.0301, 21.0302, and 21.0302 to "4160/3/60".

20. Section 11313E – Horizontal Self-Priming Sample Centrifugal Pump:

    a. Replace the Pump Schedule in paragraph 3.02 with the updated attached Pump Schedule.

21. Section 11800 – Reverse Osmosis Membrane System:

    a. Paragraph 1.04.B, ADD the following row to the Feed Water Quality Table:

Parameter	**Feed Water Quality**			
	Average	**Maximum**	**Minimum**	**Comment**
Bicarbonate (mg/L)	59	66	52	

    b. Paragraph 1.04.C, DELETE the following row from the Permeate Only Table:

Parameter	**Permeate Only (Note 1, 2)**		
	Minimum	**Average**	**Maximum**
~~Alkalinity (mg/L as $CaCO_3$)~~	~~-3.3~~	~~-0.16~~	~~1.76~~

22. Section 11902 – Fish Screen Assembly and Cleaning System:

    a. Revise 2.02.B.3.a: "Receiver shall include a class 150 ANSI flanged outlet with a 6" butterfly valve (VAL 76.0202) type 521 as specified in Section 15112 - Butterfly Valves."

    b. Add at the end of 2.02.B.3: "b. Compressor assembly shall include two 6" air burst system control valves, VAL 76.0104A and VAL 76.0104B. Valves shall be type 521 per Section 15112 and electrically actuated per Section 13447.

23. Section 13224 – Filter Underdrain Replacement:

    a. Replace Paragraph 1.03.A.3.b with: "The plastic block underdrain system, when installed, shall be designed for a minimum of 30 psi uplift."

    b. Delete Paragraph 3.01.A.1.a in its entirety.

24. Section 13226 – Filter Media:

    a. Replace Paragraph 1.01.B with: "Media Responsibility: If there are multiple media suppliers, one of the media suppliers shall be the Overall Media Supplier and shall have the sole responsibility for furnishing granular activated carbon and silica sand media meeting the requirements of this specification."

    b. Delete Paragraph 1.04.B.1.e in its entirety.

    c. Replace Paragraph 1.05.E with: "The Overall Media Supplier of the filter media shall supervise the media installation in the first two filters."

    d. Delete Paragraph 2.10.A.4 in its entirety.

25. Section 13447 – Electric Actuators, p. 12, Intelligent Actuator Schedule, Reference DWG 21N21-04:

    a. Change Item "Raw Water to Reservoir Isolation Valve" to "Raw Water to WTP Isolation Valve".

    b. Change Item "Raw Water to WTP Isolation Valve" to "Raw Water to Reservoir Isolation Valve".

26. Section 15052 – Common Work Results for General Piping:

    a. Paragraph 2.04.D, insert:

       "3. On buried pipes:
          a. Bolts: ASTM A193, Grade B7.
          b. Nuts: ASTM A194, Grade 2H.
          c. Coat with high solids epoxy."

    b. Insert after Paragraph 2.05.A.1: "2. All pipe and flange gaskets shall be NSF 61 approved except sanitary sewer, storm drain, and drain pipes."

    c. Delete Paragraph 2.05.B. in its entirety.

    d. Replace Paragraph 2.05.D.2.with:

       "2. Material:
          a. Chemical systems: 0.125-inch thick Viton™ rubber.
          b. Sewer and water: 0.125-inch thick SBR."

    e. Delete Paragraph 2.05.G.in its entirety.

    f. Paragraph 2.05.H.1, replace "pressures equal to or less than 150 pounds per square inch gauge" with "pressures equal to or less than test pressure indicated in the pipe schedule."

    g. Paragraph 2.05.H.1, insert:

       "a. SBR.
        b. NBR."

    h. Section 2.05, add to end:

       "I. Gaskets for mechanical joints in ductile iron:
          1. Certified to NSF-61 when used for potable water service.
          2. SBR or NBR or EPDM.

       J. Gaskets for push-on rubber gasket joints in ductile iron:
          1. Certified to NSF-61 when used for potable water service.
          2. SBR or NBR or EPDM."

27. Section 15111A – V-Port Control Valves:

a. REPLACE the table under Paragraph 2.01.E with the following:

Valve ID	Size (in)	Max Flow			Min Flow			CCV at 100% Open
		Qmax (gpm)	Inlet Pressure (psig)	Pressure Drop (psi)	Qmin (gpm)	Inlet Pressure (psig)	Pressure Drop (psi)	
VAL-25.0103A	6	346	735	672	346	162	155	1230
VAL-25.0203A	6	346	735	672	346	162	155	1230
VAL-25.0303A	6	346	735	672	346	162	155	1230
VAL-25.0403A	6	346	735	672	346	162	155	1230
VAL-25.0012A	6	2,000	70	50	500	50	2	1230
VAL-25.0903E	4	700	75	55	250	55	2	600
VAL-26.0301A	2.5	350	55	50	37	40	35	260
VAL-26.0301B	10	2800	55	50	250	40	35	3250

28. Section 15114 – Check Valves:

a. Modify the last sentence of paragraph 2.03.B as follows:
"6. Pressure Class: ASME Class 300, unless otherwise indicated in the schedule at the end of this Section ~~in the valve schedule in the Drawings~~."

b. Add new paragraph 3.04 VALVE SCHEDULE with table:

VALVE SCHEDULE				
Valve Type	**Valve Size**	**Valve #**	**Service**	**Location**
CV670	2"	66.0801B	Sulfuric Acid	Chemical Storage
CV633	2"	66.0901A	Calcium Chloride	Chemical Storage
CV632	6"	25.0903F	6" ROFF	CIP System
CV631	6"	25.0103C	6" BRN	RO Facility – Second Stage
CV631	6"	25.0203C	6" BRN	RO Facility – Second Stage
CV631	6"	25.0303C	6" BRN	RO Facility – Second Stage
CV631	6"	25.0403C	6" BRN	RO Facility – Second Stage

VALVE SCHEDULE				
Valve Type	**Valve Size**	**Valve #**	**Service**	**Location**
CV631	10"	25.0103G	10" ROP	RO Facility – Second Stage
CV631	10"	25.0203G	10" ROP	RO Facility – Second Stage
CV631	10"	25.0303G	10" ROP	RO Facility – Second Stage
CV631	10"	25.0403G	10" ROP	RO Facility – Second Stage
CV620	12"	25.0001	12" BFW	Brackish Filtered Water Pump Station
CV620	12"	25.0002	12" BFW	Brackish Filtered Water Pump Station
CV620	12"	25.0003	12" BFW	Brackish Filtered Water Pump Station
CV610	18"	21.0301A	18" Raw W	Raw Water Pump Station
CV610	18"	21.0302A	18" Raw W	Raw Water Pump Station
CV610	18"	21.0303A	18" Raw W	Raw Water Pump Station

29. Section 15119 – Automatic Air and Vacuum Valves:

    a. Paragraph 2.01.B.4. Replace with "Pressure rating: 125 pounds per square inch for valves at WTP and in Lone Tree Way. 250 pounds per square inch for valves at River Pump Station."

    b. Paragraph 2.01.B.5. Replace with "Inlet: Screwed. 2" minimum or valve size indicated on drawings."

30. Section 15211 – Ductile Iron Pipe: AWWA C151:

    a. Paragraph 2.01.B.4, delete in its entirety.

    b. Paragraph 3.01.B.3., delete in its entirety.

31. Section 15265 – Plastic Piping and Tubing:

    a. Paragraphs 2.03.A.1.a and 2.03.A.1.b., delete in its entirety.

    b. Paragraph 2.07.A, change "Materials:" to "Materials (<=1/2 inch):"

    c. Paragraph 2.07, add:

    "B. Materials (>1/2 inch):

    1. AWWA C901"

32. Section 17901 – Schedules: Field Instruments:

    a. Add the attached Schedule.

33. Section 17902 – Schedules: Control Panels:

    a. Add the attached schedule.

34. Section 17903 – Schedules: I/O List:

    a. Add the attached schedule.

35. Section 17905 – Schedules: HMI List:

    a. Add the attached schedule.

DRAWINGS

The following drawings are modified as indicated below.

1. Replace the following drawings with the attached updated drawings: G10, G13, G14, G18, G19, TCP06, TCP07, TM01, TM03, TP06, 00A01, 25D04, 21C01, 21C02, 25C03, 25C08, 25C15, 25C16, 25C18, 25C19, 25S01, 25S02, 25S03, 25S05, 25S06, 25S08, 25S10, 25S20, 25S24, 25S25, 25S26, 25S27, 25M05, 25M18, 25M29, 25M40, 25M41, 00E03-02, 00E03-04, 00E03-06, 00E04-04, 00N03-01, 21N21-04, 21N21-05, 21N21-06, 25N25-03, 25N25-04, 25N25-06, 25N25-10, 25N25-12, 25N25-13, 25N25-15, 25N25-17, 25N25-18, 25N25-20, 25N25-22, 25N25-23, 25N25-25, 25N25-27, 25N25-28, 25N25-29, 25N65-01, 25N66-02, 25N66-04, 25N66-06, 25N69-01,P47, P48, P49, P50

2. Add the new attached drawings: 25C18A, 25M27, 25M28, 25M41A, 25S28, 25N61-01, 25N61-02

3. Drawing G10, Deferred Submittals, Note 4. Modify the last sentence as follows:

   "A. Not Used"

4. Drawing TP01:

   a. Add Notes 4 and 5 to Detail P240/TYP:

      "4. The assembly must meet the test pressure specified in the pipe schedule.

      5. Flanged outlet and service saddle minimum size shall match ARV size."

   b. Typical Detail P110: Replace Note 5 with "HIGH STRENGTH TIE-RODS UP TO 1-INCH DIAMETER MAY BE USED. CONTRACTOR SHALL SUBMIT CALCULATIONS FOR APPROVAL. VERIFY FLANGE DIMENSIONS WORK WITH TIE-RODS.

5. Drawing TN03:

   a. Detail NP501, add new notes 3 and 4:

      "3. First valve after weld-o-let or thread-o-let should be 1" carbon steel. Tubing between the valve and the instrument should be 316L SS with minimum 0.035" wall thickness.

      4. For pressure gages, use a ½" male connection with ½" SS tubing between the first valve after the weld-o-let or thread-o-let and the pressure gage/switch."

6. Drawing TN04:

   a. Detail NP502, add new notes 3 and 4:

      "3. First valve after weld-o-let or thread-o-let should be 1" carbon steel. Tubing between the valve and the instrument should be 316L SS with minimum 0.035" wall thickness.

      4. For pressure gages, use a ½" male connection with ½" SS tubing between the first valve after the weld-o-let or thread-o-let and the pressure gage/switch."

7. Drawing 25D01:

   a. Delete General Note 2 and replace with "2. AT CONTRACTOR'S OPTION, INSTALL TEMPORARY PIPING AS REQUIRED TO MAINTAIN SERVICE OF 6" FW LINE. RECORD DWGS SHOW EX LINE VALVES ON 6" FW ADJACENT TO CLEARWELL AND AT 12" FW IN ROAD TO ZONE II RESERVOIR. THOROUGHLY FLUSH, DISINFECT AND SAMPLE TEMPORARY PIPE PRIOR TO CONNECTING TO EX POTABLE WATER SYSTEM PER SECTION 01757."

   b. Add keynote 8 callouts pointing to shrubs at gridline C7 and at gridline E7. Add keynote 8 "8. REMOVE EXISTING SHRUBS AND SMALL TREES ALONG HILLSIDE ADJACENT TO ACCESS ROAD AS REQUIRED FOR CONSTRUCTION."

   c. At gridline B6, add demo hatch to tree, callout and keynote 4 pointing to tree to right of Service Entrance Equipment saying "12" TREE".

   d. Keynote 4, replace "5 TRESS" with "6 TREES".

   e. Add note pointing south end of Plant A Clearwell: "SEE DWG 25D03 FOR CLEARWELL DEMOLITION".

   f. Add note pointing to existing duct bank on top of south end of Plant A Clearwell: "PROTECT IN PLACE EX DUCT BANK ON TOP OF CLEARWELL".

8. Drawing 25D02:

   a. Delete General Note 2 and replace with "2. AT CONTRACTOR'S OPTION, INSTALL TEMPORARY PIPING AS REQUIRED TO MAINTAIN SERVICE OF 12" FW and 24" FW. RECORD DRAWINGS SHOW EX LINE VALVES ON 12" FW AT THE WTP SOUTH PROPERTY LINE AND NEAR FLOW METER "A"

NORTH OF THE CLEARWELL. RECORD DRAWINGS SHOW EX LINE VALVES ON 24" FW EAST OF FLOW METER "B" NORTH OF THE CLEARWELL AND 100 LF SOUTH OF THE INTERSECTION OF DAVISON AND LONE TREE WAY. THOROUGHLY FLUSH, DISINFECT AND SAMPLE TEMPORARY PIPE PRIOR TO CONNECTING TO EX POTABLE WATER SYSTEM PER SECTION 01757."

9. Drawing 25C04:
   a. At gridline D2, add callout N2184951.37, E 6184113.21 pointing to north end of masonry sound wall.
   b. At gridline F2, add callout N2184875.44, E 6184144.94 pointing to south corner of masonry sound wall.

10. Drawing 25C13:
    a. Change profile name from "30" BFW" to "30" ID BFW" in two locations.

11. Drawing 25C14, Section A. Replace drilled pier callout "(18" DEEP)" with "(20' DEEP).

12. Drawing 25C20:
    a. On general note 1, change "02268" to "02665".

13. Add new attached drawing 25S23 to bid documents.

14. Drawing 21M01:
    a. Add to key note 1.
       1) "Thrust collar not required."

15. Drawing 21M05:
    a. Modify the connection between the Tee screen flanges and ductile iron pipe and fittings in Plan View A and Section B as shown on the attached drawing, Figure 1.
    b. In Section C, replace "Specification Section 02050" with "Specification Section 02317" in three places.

16. Drawing 25M01:
    a. Add Key Note 10 pointing to buried 12" BFW at gridline F2. Add key note "10. See detail A/25C18 for 12" BFW profile."
    b. On south side of building, change "30" BFW (HDPE)" callout to "34" BFW (HDPE)" in two locations.

17. Drawing 25M05:

    a. Key Tag 12:

        1) REPLACE "CV621" with "CV631".

    b. Key Tag 16:

        1) REPLACE "CV621" with "CV631".

18. Instrumentation Drawings:

    a. Various Pipe Callouts on the Instrumentation Drawings revised per the following table:

DRAWING NO.	CONTINUATION TAG UNIQUE IDENTIFIER	CURRENT PIPE CALLOUT	REVISED PIPE CALLOUT
21N21-04	122	1/2" SFA (T5)	1/2" SFA (T4)
21N21-05	205	1/2" SFA (T5)	1/2" SFA (T4)
25N25-03	129	1/2" SBS (T5)	1/2" SBS (T4)
25N25-06	141	1/2" SFA (T5)	1/2" SFA (T4)
25N25-10	30	1/4" SA (T4)	1/4" SA (T5)
25N25-12	30	1/4" SA (T4)	1/4" SA (T5)
25N25-12	NONE	1/4" SA (T4)	1/4" SA (T5)
25N25-12	NONE	1/4" SA (T4)	1/4" SA (T5)
25N25-13	42	1/4" SA (T#)	1/4" SA (T5)
25N25-15	76	1/4" SA (T4)	1/4" SA (T5)
25N25-17	76	1/4" SA (T4)	1/4" SA (T5)
25N25-17	NONE	1/4" SA (T4)	1/4" SA (T5)
25N25-17	NONE	1/4" SA (T4)	1/4" SA (T5)
25N25-18	143	1/4" SA (T#)	1/4" SA (T5)
25N25-20	84	1/4" SA (T4)	1/4" SA (T5)
25N25-22	84	1/4" SA (T4)	1/4" SA (T5)
25N25-22	NONE	1/4" SA (T4)	1/4" SA (T5)
25N25-22	NONE	1/4" SA (T4)	1/4" SA (T5)
25N25-23	144	1/4" SA (T#)	1/4" SA (T5)
25N25-25	91	1/4" SA (T4)	1/4" SA (T5)
25N25-27	91	1/4" SA (T4)	1/4" SA (T5)
25N25-27	NONE	1/4" SA (T4)	1/4" SA (T5)
25N25-27	NONE	1/4" SA (T4)	1/4" SA (T5)
25N25-28	145	1/4" SA (T#)	1/4" SA (T5)
25N25-29	100	1/2" CC (T5)	1/2" CC (T4)
25N65-01	129	1/2" SBS (T5)	1/2" SBS (T4)
25N66-02	141	1/2" SFA (T5)	1/2" SFA (T4)
25N66-04	122	1/2" SFA (T5)	1/2" SFA (T4)

DRAWING NO.	CONTINUATION TAG UNIQUE IDENTIFIER	CURRENT PIPE CALLOUT	REVISED PIPE CALLOUT
25N66-04	205	1/2" SFA (T5)	1/2" SFA (T4)
25N66-06	100	1/2" CC (T5)	1/2" CC (T4)
25N69-01	27	1/2" SI (T5)	1/2" SI (T4)

19. Drawing P15:
    a. REPLACE second line of note at grid line 11D "WITH 14" OF HDPE D317 CP167/TYP" with "WITH 14" HDPE DR17 CARRIER PIPE. AUGER BORE CP167/TYP".

20. Drawing P23:
    a. In profile near Sta 143+80, change "(IN 30" HDPE CASING)" TO "(IN 28" HDPE CASING)".
    b. Replace key note 5 with "CONNECT GATE VALVE TO HDPE PIPE USING BUTT FUSION OF A POLYCAM SERIES 908 (OR EQUAL) ID CONTROLLED MJ ADAPTOR TO EITHER SIDE OF THE GATE VALVE WITH A MEGALUG."

21. Drawing P26:
    a. Add key note 11 callout at Grid line 8A.
        1) "11. A City Use Agreement must be entered into for use of this parcel. See Appendix K."
    b. Replace key note 7 with "CONNECT GATE VALVE TO HDPE PIPE USING BUTT FUSION OF A POLYCAM SERIES 908 (OR EQUAL) ID CONTROLLED MJ ADAPTOR TO EITHER SIDE OF THE GATE VALVE WITH A MEGALUG."

22. Drawing P27:
    a. In profile near Sta 143+80, change "(IN 30" HDPE CASING)" TO "(IN 28" HDPE CASING)".

23. Drawing P28:
    a. Replace key note 5 with "CONNECT GATE VALVE TO HDPE PIPE USING BUTT FUSION OF A POLYCAM SERIES 908 (OR EQUAL) ID CONTROLLED MJ ADAPTOR TO EITHER SIDE OF THE GATE VALVE WITH A MEGALUG."

24. Drawing P33:
    a. Change Key Tag 1 to BRN-CARV-25.

25. Drawing P34:
    a. Change Key Tag 1 to BRN-CARV-26.

26. Drawing P35:

    a. Add Key Tag 1 pointing to CARV in plan. Add Key Tag 1 ~~BRN-CARV-26A~~ 2" CARV 911.

27. Drawing P44:

    a. Add keynote 7 callout adjacent to "EX 18' RAW W (CI)" label at gridline 3B. Add new keynote 7: "7. FILL APPROX 1735 LF OF EX 18" RAW W LINE AND 15 LF OF 30" RAW W LINE TO BE ABANDONED IN PLACE WITH CLSM FROM APPROXIMATELY STA 10+00 TO STA 27+75.

28. Drawings P45:

    a. Add keynote 3 callout adjacent to "EX 18' RAW W (CI)" label at gridline B5. Add new keynote 3: "3. FILL APPROX 1735 LF OF EX 18" RAW W LINE AND 15 LF OF 30" RAW W LINE TO BE ABANDONED IN PLACE WITH CLSM FROM APPROXIMATELY STA 10+00 TO STA 27+75.

29. Drawing P46:

    a. Add keynote 3 callout adjacent to "EX 18' RAW W (CI)" label at gridline C11. Add new keynote 3: "3. FILL APPROX 1735 LF OF EX 18" RAW W LINE AND 15 LF OF 30" RAW W LINE TO BE ABANDONED IN PLACE WITH CLSM FROM APPROXIMATELY STA 10+00 TO STA 27+75.

30. Drawing P51:

    a. Detail A, At Sta 2+18, REPLACE "-47.0 Top of Casing" with "-46.0 Top of Casing". Lower pipe and casing so top of casing is at elevation -46.0.

    b. Detail A, Change "14" HDPE(DR17) BRINE LINE IN 36" HDPE (DR 9) CASING" TO "14" HDPE (DR11) BRINE LINE IN 28" HDPE(DR 9) CASING".

    c. Detail B, At Sta 2+18, REPLACE "-44.0 Top of Casing" with "-48.0 Top of Casing". Lower pipe and casing so top of casing is at elevation -48.0.

    d. Detail B, Change "14" HDPE(DR17) BRINE LINE IN 36" HDPE (DR 9) CASING" TO "14" HDPE (DR11) BRINE LINE IN 28" HDPE(DR 9) CASING".

    e. Detail E, at gridline E11, change replace callout at pipe elbow with "INSTALL NEW 18" 90° DI BEND WITH MEGALUG CONNECTION ON EX CI PIPE".

SELECTED RESPONSES TO REQUESTS FOR INFORMATION

1) **Question:** AIR VACUUM AND AIR RELEASE FOR 3" AND SMALLER VALVE ASSEMBLY WITH 4" FLANGE OUTLET: Looking at detail P240 / TP01, we see the callout for a 4" 150 LB, blind flange drilled and tapped for a NPT nipple. Is it your intention for all air release valve assemblies 3" and smaller to have a 4" flanged outlet on top of the pipe that the air release valve is installed? Please clarify.

   Answer: The minimum welded outlet size with blind flange or minimum service saddle connection should be suitable for a pipe size matching the ARV size. The pressure rating of the assembly should meet the test pressure listed in the pipe schedule.

2) **Question:**
   We would like clarification regarding the Contractor(s)'s right to reject any applicant referred by the Union(s), specifically confirming that such rejection of applicants are not subject to the grievance procedure in Article 12, nor employees discharged within the Contractor(s)'s right to reject timeframes specific to each Union.

   Answer:
   Section 2.1 of the Project Stabilization Agreement ("PSA") provides:

   The provisions of this Agreement, including the local master labor agreements ("Master Labor Agreement(s)") of the Union(s) signatory to this Agreement incorporated herein by reference, shall apply to the work covered by this Agreement, notwithstanding the provisions of any other local, area and/or national agreements which may conflict with or differ from the terms of this Agreement, except as provided in Section 2.4. To the extent a provision of this Agreement is inconsistent with a Master Labor Agreement, the provisions of this Agreement shall prevail. Where a provision of a Master Labor Agreement is not inconsistent with this Agreement, the provisions of the Master Labor Agreement shall apply.

   Section 14.1 of the PSA provides contractors with the right to reject any applicant referred by Union in accordance with the provisions of Article 12 (Grievance Procedure).

   Section 12.1 of the PSA provides in pertinent part:

   It is mutually agreed that disputes involving the application or interpretation of a Master Labor Agreement to which a Contractor and Union are parties, and all disputes involving employee discipline or discharge, shall be resolved pursuant to the grievance and arbitration provisions of the applicable Master Labor Agreement. No employee working on the Project shall be disciplined or discharged without just cause.

   Applying these sections of the PSA, the provisions of the applicable Union MLA are incorporated by reference into the PSA and apply where they are not in conflict with the terms of the PSA. The contractor has the right to reject an applicant referred by the Union under the provisions of the PSA. Should a Master Labor Agreement of the applicable Union provide a more specific right of rejection of an applicant, then such specific right would apply. Any dispute over application of the right of rejection would be resolved under the grievance procedure of the applicable Master Labor Agreement pursuant to the first sentence of Section 12.1 and would apply the provisions of the MLA. If, for example, such MLA allows a contractor to reject an applicant for any reason within certain timeframes and such action would not be subject to the grievance procedure of the MLA, then that provision would apply.

3) **Question:** We are providing a quote for the Diaphragm Metering Pumps described in the attached spec section and would love to know the viscosity (in centipoise) for the Sulfuric Acid?

   Answer: The dynamic viscosity for the Sulfuric Acid will vary with temperature. Please assume the dynamic viscosity will range between 18 – 34.9 centipoise for this project.

New Section

SECTION 11221[AD3]

FLASH AND RAPID MIXING EQUIPMENT

PART 1 GENERAL

1.01 SUMMARY

A. Section includes:
   1. Replacement of the existing flash mixer, including motor, drive, shaft, mixing blades, gasket, and anchors. Equipment to match the same mounting bolt pattern as existing flash mixer and be mounted on the existing concrete pedestal with new anchor bolts. Refer to the appendix of this specification for more information.
   2. Contractor/supplier to confirm all dimensions of the existing mixer and coordinate with new mixer submittal.
   3. If provided mixer does not match the dimensions of the existing mixer, Contractor/Supplier will be responsible for all costs associated with the design and construction of all modifications (including concrete pad modifications) needed to install the new unit.
   4. Each unit shall be furnished and installed complete with all anchors and supports; all mechanical equipment required for proper operation, including a complete drive unit; and all additional materials or construction required by the manufacturer's design.
   5. Each assembly (motor, drive, shaft, impellers, etc. shall have a combined weight that does not exceed 2000 pounds.

B. Tag number designations: As indicated in the Schedule.

1.02 REFERENCES

A. American Gear Manufacturers Association (AGMA):
   1. 6013 - Standard for Industrial Enclosed Gear Drives.

B. American Bearing Manufacturers Association (ABMA):
   1. 9 - Load Rating and Fatigue Life for Ball Bearings.
   2. 11 - Load Rating and Fatigue Life for Roller Bearings.

C. National Electrical Manufacturers Association (NEMA):
   1. 250 - Enclosures for Electrical Equipment (1000 V Maximum).
   2. MG 1 - Motors and Generators.

1.03 DEFINITIONS

A. NEMA Type 4X enclosure in accordance with NEMA 250.

1.04 SUBMITTALS

A. Product data: Include manufacturer's technical specifications and data describing the complete assembly and data covering materials used, power drive assemblies, and accessories forming a part of the equipment furnished.

B. Dimensions of the existing equipment, including impeller size and spacing, shaft length, mounting bolt pattern and comparison drawing showing it matching to the new unit:
   1. If new unit does not match existing unit bolt pattern, provide drawings, including equipment pad and anchorage design showing how the unit will be installed. Any design drawings must be stamped by a registered professional engineer in the state of California.

C. Shop drawings: Include fabrication, assembly, and mounting drawings showing materials and significant dimensions. Minimum data requirements as listed below:
   1. Impellers:
      a. Diameter.
      b. Maximum shaft speed.
      c. Tip speed at maximum shaft speed and at minimum required water horsepower.
      d. Materials.
      e. Stress at maximum load.
      f. Setting elevation.
      g. Water horsepower at maximum speed and minimum temperature.
      h. Power number.
      i. Flow number.
      j. Flow field and hydraulic loading analysis results.
   2. Impeller shaft:
      a. Diameter.
      b. Materials.
      c. Critical speed of rotating assembly.
      d. Torsional and bending stresses at maximum load.
      e. Coupling details.
      f. Impeller connection details.
      g. Revolutions per minute at maximum motor speed.
      h. Revolutions per minute at minimum required water horsepower.
      i. Revolutions per minute at maximum water horsepower at reduced speed.
      j. Coupling-shaft sleeve arrangement.
      k. Lower bearing details.
      l. Flow field and hydraulic loading analysis results.
   3. Gear reducers:
      a. Manufacturer’s literature and drawings.
      b. Model number.
      c. AGMA horsepower rating.
      d. Materials.
      e. Efficiency.
      f. Bearing ratings.
      g. Lubrication details.
      h. Bearing life under maximum loading conditions.
   4. Motors:
      a. Provide manufacturer's data sheets and drawings with sufficient detail to demonstrate compliance with specified requirements.
      b. Horsepower.
      c. Revolutions per minute.
      d. Insulation and enclosure details.
      e. Efficiency at full, 3/4, and 1/2 load.

5. Support design information:
    a. Weight of complete assembly.
    b. Impeller shaft and impeller weight.
    c. Torque load.
    d. Setting drawings and instructions for installation of anchor bolts and gear reducer, including tolerances.
6. Electrical information:
    a. Wiring diagrams showing electrical connections to motor.

D. Operation and maintenance manuals:
1. Submit as specified in Section 01782 - Operation and Maintenance Manuals.
2. Data and specifications for each unit shall include the following:
    a. Installation, operation, and maintenance data.
    b. Impeller information, including diameter, power number, and flow number.
    c. Impeller shaft size, material, and number of sections.
    d. Motor data in accordance with the Submittals article.
    e. Type, specifications, details, input and output speeds, exact gear ratios, and service factor (24-hour continuous service) of speed reducers.
    f. Motor, maximum horsepower requirements, revolutions per minute, insulation and enclosure, and efficiency.
    g. Ratio of maximum rotative speed to critical speed of shaft.
    h. Details of supporting base structure: Weight of complete assembly, torque load, and setting drawings and instructions for installation of anchor bolts and gear reducer, including tolerances.

E. Certifications:
1. Power numbers and flow numbers:
    a. Submit certification that design has been performed in accordance with the specifications.
    b. Submit for approval documented laboratory testing results and full-scale prototype or actual process results that clearly substantiate radial flow impeller performance in regard to the specification requirements.
    c. Submit certified Laser Doppler Velocimetry or Particle Image Velocimetry data verifying both power number and flow number for the impellers to be supplied for this Project.
    d. Submit data to substantiate required average velocity gradients and primary pumping capacities at the specified temperature and operating speed.
    e. Verify average velocity gradients and primary pumping capacities at specified temperatures and operating speeds.

1.05 SYSTEM DESCRIPTION

A. General: Provide 1 mixing unit matching the existing flash mix unit. The arrangement of the mixing units is indicated on the Drawings:
1. The mixers shall provide complete and uniform dispersion of treatment chemicals into the raw water.

B. Each mixer shall consist of a constant-speed motor-driven gear reducer directly connected to a vertical shaft equipped with an radial flow turbine impeller:
   1. All drive assemblies, bearings, couplings, and structural supports shall be located above the liquid level in the mixing compartments to ensure ease of service and dependable operation.
   2. All components of the equipment shall be completely suitable in all respects for outdoor operation and 24-hour -per-day continuous operation.

C. The mixers shall be designed for operation in the mixing chambers as scheduled and as indicated on the Drawings.

D. Design requirements:
   1. Mixers shall provide complete and uniform dispersion of treatment chemicals into water.
   2. Each mixer shall consist of a constant-speed motor-driven gear reducer directly connected to a vertical shaft equipped with two impellers as indicated in the appendix.
   3. Drive assemblies, bearings, couplings, and structural supports shall be located above mounting level in mixing compartments to ensure ease of service and dependable operation.
   4. Components of equipment shall be completely suitable for outdoor operation and 24 -hour-per-day continuous operation.

1.06 QUALITY ASSURANCE

A. Manufacturer qualifications: Mixing equipment manufacturer in the United States with minimum of 15 years of experience producing substantially similar equipment, able to show evidence of minimum of 5 installations in satisfactory operation in the continental United States for a minimum of 5 years, and member of AGMA.

B. Unit responsibility: For each type of equipment specified, provide from a single manufacturer as listed.

C. Component supply and compatibility:
   1. Obtain equipment included in this Section from a single mixing equipment manufacturer.
   2. Mixing equipment manufacturer shall review shop drawings and other submittals prepared for flash- and rapid-mixing equipment components.
   3. Gear reducers shall be manufactured by mixing equipment manufacturer.

1.07 DELIVERY, STORAGE, AND HANDLING

A. Packing for shipping:
   1. Protect machined surfaces and mating connections.
   2. Protect bearings and gearing with a shop-applied corrosion-prevention coating.
   3. Cover openings into gearboxes with vapor-inhibiting and water-repellent material.
   4. Crate in a manner which will prevent damage during shipment, delivery, and on-site storage.
   5. Identify crate contents by a packing slip fastened to the outside of crate.

B. Deliver materials to the site to ensure uninterrupted progress of the Work.

C. Deliver anchor bolts and anchorage devices, which are to be embedded in cast-in-place concrete, in ample time to not delay Work.

D. Store materials to permit easy access for inspection and identification.

E. Keep steel members off ground, using pallets, platforms, or other supports.

F. Protect steel members and packaged materials from corrosion and deterioration:
   1. Store in loose-covered, breathable storage area off the ground to prevent condensation.
   2. The use of plastic sheeting will not be allowed.

1.08 ENVIRONMENTAL REQUIREMENTS

A. Drive units will be mounted outdoors and shall be suitable for outdoor operation with exposure to rain and dust.

1.09 MAINTENANCE

A. Furnish with each unit the following spare parts, which shall include, as a minimum, the following:
   1. Special tools required for maintenance and operation.

B. Spare parts for each mixing unit:
   1. 1-year supply of bearing grease or oil.
   2. 1 repair kit for each size of speed reducer supplied. Kit shall include, as a minimum:
      a. Gaskets.
      b. Seals.
      c. Retaining rings.
      d. Packing rings.
      e. Adaptor sleeves.
   3. 1 spare impeller blade with fasteners.

C. Label and box spare parts as specified in Section 01600 - Product Requirements.

PART 2 PRODUCTS

2.01 MANUFACTURERS

A. Mixers: One of the following or equal:
   1. Philadelphia Mixing Solutions Ltd.
   2. Mixing Equipment Co., Inc.; Lightnin, Series 80.
   3. Chemineer, Inc.

B. Motors: The following or equal:
   1. Reliance Electric.

2.02 DRIVE UNIT ASSEMBLY

A. General:
   1. Design drive unit assembly for the specific requirements of mixer service and suitable for 24-hour-per-day operation in outdoor conditions exposed to rain and dust.
   2. Each drive unit assembly consists of an electric motor and a speed reducer with a flexible coupling provided between the motor and speed reducer.
   3. Overall installed height: Entire drive unit including electric motors, maximum 5 feet above supporting deck elevation.
   4. Speed reducers requiring internal or external oil pumps: Prohibited.
   5. Oil-level gauge or dipstick and drain: Included.
   6. External cooling: Not required to dissipate heat.
   7. 1 set of lifting lugs: Designed and located to permit lifting complete mixer and drive unit.
   8. Lifting lugs: Provide on each motor and speed reducer.

B. Right-angle drive configuration: Required when applicable.

C. Flexible coupling: Provide with flexible coupling between motor and speed reducer:
   1. Pinion mounted directly on motor shaft: Prohibited.
   2. Motors: Readily separated from speed reducers.

D. Speed reducer:
   1. Furnished with independent bearing support construction.
   2. Designed and rated in accordance with AGMA Standard 6013 with minimum service factor of 2.0 based on motor nameplate horsepower.
   3. Housing: Constructed of close-grain cast iron or steel weldments.
   4. Output shaft: Constructed and supported such that shaft deflections caused by operating loads do not affect alignment of anti-friction bearings or cause misalignment of gearing during mixer operation.
   5. Bearings: Anti-friction type with minimum L-10 life of the following hours as defined by AMBA 9 and 11:
      a. L-10 life, general: 100,000 hours.
      b. L-10 life, output shaft bearings: 300,000 hours.
      c. Bearing life: Based on rated motor nameplate horsepower.
      d. Allowance for vacuum-processed metals or special processing techniques: None.
   6. Lubrication system: Provide with a suitable lubrication system for all-weather starting and operation of unit. Include the following:
      a. Dipstick or sight glass: Provide to observe oil levels.
      b. Fill and drain lines: Sized for efficient functioning and located for easy accessibility.
      c. Oil changes, following initial run-in period: Not required at less than 2,500-hour intervals.
      d. Oil leakage down low-speed shaft: Prevented by means of a dry well.
      e. Oil drain: Extended from drive to prevent leakage and spillage during oil changes.
      f. Speed-reducer breather: Located above possible oil-foam level.

E. Gearing systems:
   1. Reducers employing worm gearing will not be acceptable.
   2. Utilize precision-ground, alloy-steel, spiral-bevel, and helical-gear combinations.
   3. Gear lubrication: Splash type.

F. Sound level: Maximum 85 dBA at 3 feet from drive assembly at operating speeds.

G. Unit: Capable of supporting overhung loads.

H. External cooling: Not required to dissipate heat.

I. Flanged pedestal: Provided for mounting speed reducer to base plate.

J. Bearings: Anti-friction type with minimum L-10 life of the following hours as defined by AMBA 9 and 11:
   1. Typical: 100,000 hours.
   2. Output shaft bearings: 300,000 hours.
   3. Bearing life: Based on rated motor nameplate horsepower.

K. Allowance for vacuum-processed metals or special processing techniques: None.

L. General maintenance, specifically including motor changes, gear changes, replacement of anti-friction bearings (except bearings supporting output shaft), and oil system maintenance: Shall not require removal of speed-reducer housing from speed-reducer housing foundation.

2.03 MOTORS

A. Type:
   1. Horizontal, totally enclosed, fan-cooled, foot-mounted, squirrel-cage induction units.
   2. NEMA Design B in accordance with NEMA MG 1.

B. General: As specified in Section 16222 - Low Voltage Motors up to 500 Horsepower, unless otherwise specified.

C. Electrical service requirements:
   1. Power supply: 480 volt, 3-phase, 60 hertz.
   2. Premium high-efficiency, high-power factor, and severe-duty motors designed for specified horsepower ratings and for continuous operation.
   3. Service factor: 1.15 at 50 degrees Celsius ambient temperature.
   4. Insulation: Class F.
   5. Windings: Copper.

D. Motor and drive assembly requirements:
   1. Bearings: Anti-friction with minimum L-10 life of 50,000 hours as defined by AMBA 9 and 11.
   2. Motor: Direct connected to input shaft of speed reducer with a flexible coupling.
   3. Each coupling: Provided with an approved-type guard for each coupling.

E. Size of motor: Sufficient so that unit operates within motor's rated nameplate horsepower under every condition of operation.

F. Motor terminal box: Cast iron or fabricated steel, neoprene gasketed and bolted, and oversized to provide adequate space for connections.

G. Motor leads: Permanently marked in agreement with connection diagram.

H. Nameplates: Stainless steel, as a minimum indicating type, frame, insulation, class, horsepower, full load current, revolutions per minute, centigrade degree rise, manufacturer's name and serial number, model, voltage, locked rotor kVA code, and a connection diagram.

2.04 IMPELLER AND IMPELLER SHAFT

A. Impeller type:
   1. Two Vertical Flat Blade Turbines, each containing four blades.

B. Unit: With high pumping characteristics, dynamically and hydraulically stable.

C. Power number: Minimum 3.5.

D. Shaft stabilizers: Use of shaft stabilizers is not acceptable.

E. Shaft diameter:
   1. As determined by analysis of torque, bending moment, and the critical speed.
   2. Larger than that required by structural design and analysis or operating critical speed ratio speed criterion specified.

F. Strength of shaft, impellers, and couplings:
   1. As determined by manufacturer's detailed structural calculations in accordance with AISC, using appropriate endurance limit for stainless steel furnished.
   2. Strength of components shall be sufficient to resist hydraulic forces within basins, with a service factor of not less than 2.0.
   3. Shaft shall be designed for infinite fatigue life based on eccentric loading that would occur with 1 impeller blade missing.
   4. Hydraulic forces shall be determined based on the uniform flow rates indicated in this Section, basin and equipment configuration as indicated on the Drawings, and anticipated flow conditions within the mixing basins, as supported by computational hydraulic modeling techniques to estimate local velocity vectors and flow eddies within the mixing chambers.
   5. Hydraulic modeling: Hydraulic modeling shall be provided by the mixer manufacturer as follows:
      a. Modeling technique shall be finite element with flow-through capability or comparable method:
         1) Static modeling will not be acceptable.
      b. Flow modeling shall be conducted for process flows from the entrance at the mixing chamber rectangular butterfly valves to the exit of each mixing chamber at the mixing chamber weir gates.
      c. Modeling will reflect change in flow component caused by the mixer action.
      d. Flow modeling basis and results will be submitted with the equipment submittal.

G. Maximum output shaft speed: Maximum 45 percent of first lateral critical speed.

H. Vertical shafting for impeller assembly: Of ample size and design for service intended and supported and steadied so that unit operates without shaft whip or vibration.

I. Shaft:
   1. The output shaft shall be totally overhung.
   2. When turned by hand, impeller shaft run out or deflection shall not exceed 1/4 inch per 10 foot of length.

J. Shafts: Of solid type made from Type 316 stainless steel.

K. Rigid type couplings: Upper half of steel and lower half of stainless steel.

L. Coupling assembly at top of vertical impeller shaft: Attached to output shaft of speed reducer with lower half made from Type 316L stainless steel, welded to shaft.

M. Coupling flanges: Turned and faced after being welded in place and provided with a rabbeted or registered fit.

N. Coupling: Designed to transmit 200 percent of full torque and 150 percent of axial load on coupling.

O. Coupling halves: Bolted together through flanges with Type 316 stainless steel bolts.

P. Location of coupling: Arranged so that flange bolts may be removed from coupling by operators on top of concrete floor which supports drive.

Q. Impeller and impeller shaft:
   1. Drive unit shall be configured to allow removal of entire drive unit assembly. Vertical impeller shaft and impeller may be suspended from above concrete floor, so that a standby, complete drive unit may be installed on same sole plate or base and be in alignment.
   2. All parts which require field assembly shall be matchmarked at the factory.

R. Impeller shaft:
   1. One of the following:
      a. Supported on 2 adapter-type antifriction bearings, mounted independent of speed reducer so as to isolate gearing from bending loads caused by varying direction of fluid reaction forces, carrying only impeller shaft loads, and including thrust bearing capable of supporting entire weight of vertical impeller shaft and impeller.
      b. Lower mixer shaft connected to the upper, or drive output shaft, by means of a rigid flanged coupling, of either the welded or interference fit hub type. Coupling face shall have a rabbeted male and female piloted connection for accurate concentricity and shall not require match marks for alignment.

2.05 SUBMERGED BEARINGS

A. Submerged bearings are not allowed.

2.06 MOUNTING PLATES AND ANCHOR BOLTS

A. Mounting plate for each mixer: Mounting plate is existing. Contractor to clean face of mounting plate and provide new gasket prior to mounting mixer.

B. Anchor bolts, nuts, and other fasteners: Type 316 stainless steel, as required for connection of equipment and appurtenant items to structure or base pads.

C. Anchor sizes and installation: Sized by manufacturer for ample strength for purpose intended and installed in accordance with manufacturer's instructions, unless otherwise specified.

2.07 FINISHES

A. Shop finishing:
   1. All ferrous metals, except the control enclosure, shall be shop-primed and field-finished coated as specified in Section 09960 - High-Performance Coatings.
   2. Motors, speed reducers, and other components that could be damaged by blast cleaning may be furnished with the manufacturer's standard coating system, when approved by the Engineer.

B. Coat gears, bearing surfaces, and similar ferrous metal surfaces that are to remain unpainted with a heavy application of rust-resistant coating. Maintain coating during storage and until equipment is placed in operation.

2.08 SOURCE QUALITY CONTROL

A. Running test: Operate gear reducer at maximum speed using a rust-inhibiting break-in oil prior to shipment to check for proper operation and excessive noise and vibration.

B. Visual inspection: Verify that equipment complies with specifications and accepted shop drawings:
   1. Inspect prior to packing. Ensure that assemblies and components are complete and undamaged.

PART 3 EXECUTION

3.01 INSTALLATION

A. Install equipment in accordance with manufacturer's instructions and accepted shop drawings.

B. Install speed reducers on existing mounting plate. Clean mounting plate surface as needed and install new water tight gasket. Set level, and plumb and grout plates with nonshrink grout as specified in Section 03600 - Grouting.

C. Provide initial supply of lubricants recommended by manufacturer.

3.02 START-UP

A. Verify that structures and equipment are compatible.

B. Make adjustments required to place equipment in proper operation.

3.03 FIELD TESTING

A. General: Test results shall demonstrate to the satisfaction of the Engineer that the power demand of each drive motor does not exceed the nameplate horsepower or nameplate full-load ampere rating.

B. Drive motor: Demonstrate that power demand of each drive motor does not exceed nameplate horsepower or nameplate full-load ampere rating.

C. Mixers:
   1. Demonstrate that each mixer is capable of operation without undue noise, vibration, or shaft whip over complete range of operating speeds.
   2. Adjust, repair, or replace with new equipment.

D. Furnish necessary equipment required for testing, properly calibrated.

3.04 MANUFACTURER'S REPRESENTATIVE

A. Manufacturer shall provide services of a factory-trained representative to inspect installation of equipment, test equipment, make necessary adjustments, place equipment in initial trouble-free operation, and instruct Owner in operation and maintenance.

B. Manufacturer shall provide both classroom and hands-on instruction to plant personnel for minimum of 2 hours for each of two different sessions.

C. Classroom instruction shall cover specific operation and maintenance topics and procedures as specified in Section 01756 - Commissioning.

3.05 SCHEDULES

A. Mixers: Design mixers for operation in mixing chambers, as indicated on the Drawings, and for the following requirements:

Mixers	**Rapid Basin Mixer**
Equipment Tag Numbers	21.0701
Design Rate of Flow per Chamber	
Minimum (mgd)	2
Average (mgd)	8
Maximum (mgd)	16
Mixing Chamber Dimensions, feet-inches	4-9 by 4-9
Design Flow Water Depth, feet	12.3

Mixers	**Rapid Basin Mixer**
Actual Flow Water Depth, feet	
Minimum (feet)	11.5
Maximum (feet)	12.3
Design Mixing Volume Dimensions, feet-inches	4-9 by 4-9 by 9.3
Top of Supporting Slab Elevation, feet	145.25*
Chamber Floor Elevation, feet	129.75*
Impeller Centerline Elevation, feet	134.42*, 139.75*
Number of Impellers	2
Impeller Type	Radial
Pumping Direction	Radial
Minimum Number of Blades (per Impeller)	4
Minimum Impeller Diameter, inch	31
Maximum Motor Nameplate Horsepower	10
Maximum Mixer Total Weight, pounds	2,000
*Contractor to verify value	

B. Motors: Motors shall have the following characteristics in addition to those described:

Motors	**Rapid Basin Mixer**
Maximum Horsepower	10
Enclosure	TEFC
Synchronous Speed, rpm	1,800
Voltage, volts	460
Phase	3
Nominal Frequency, hertz	60

END OF SECTION

APPENDIX

EXISTING RAPID MIXER CUTSHEET

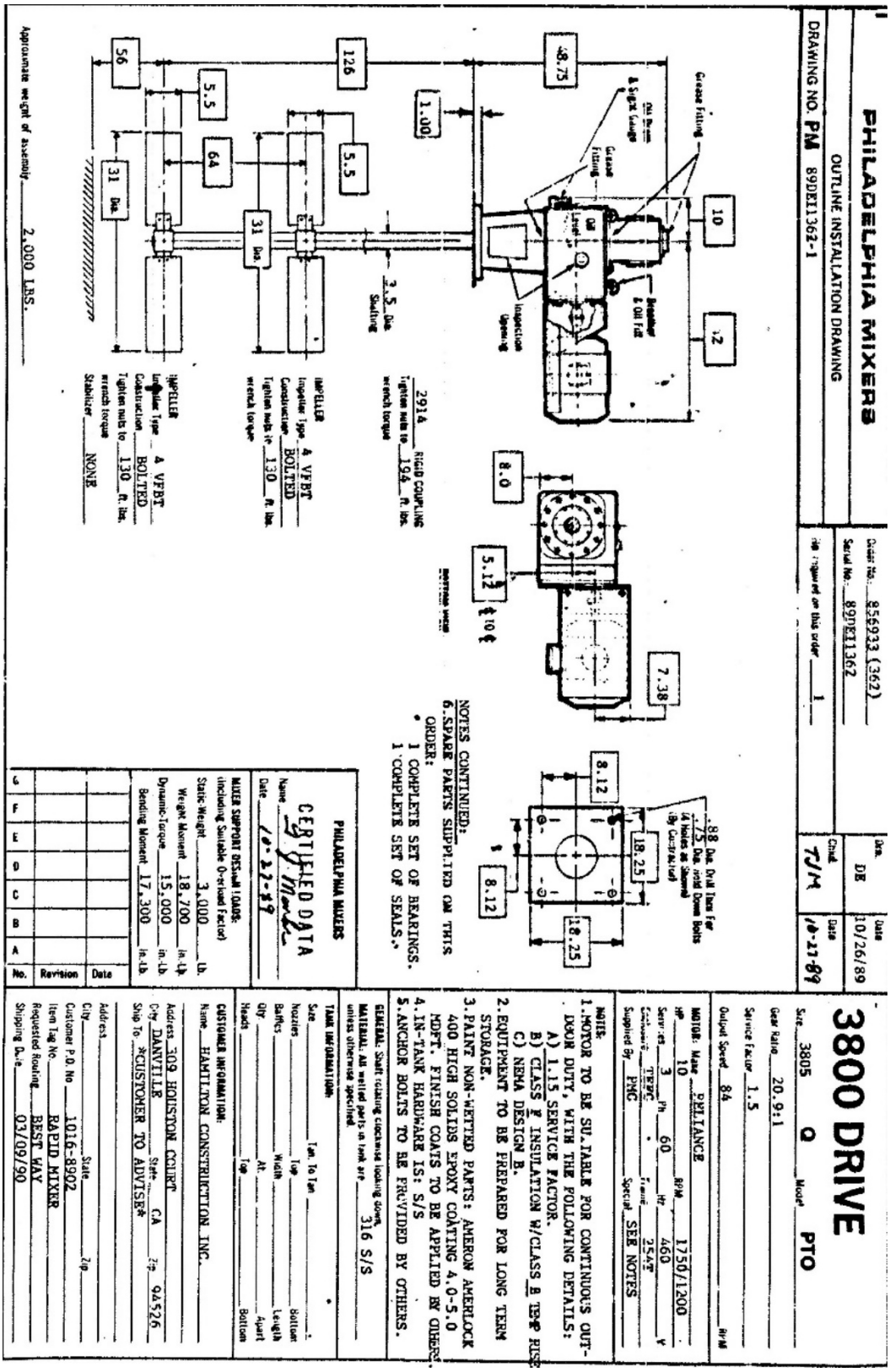

SECTION 11256

POLYMER BLENDING AND FEED EQUIPMENT: DRY

PART 1 GENERAL

1.01 SUMMARY

A. Section includes: Complete and operational automatic polymer blending and storage system.

B. As specified in Section 15050 - Common Work Results for Mechanical Equipment.

C. Tag numbers:
   1. Dry Polymer Feed Package: FDR-61.1110.

1.02 SYSTEM DESCRIPTION

A. Design requirements:
   1. Provide 1 modular polymer preparation system designed to prepare up to a maximum of 8 lb/hour of dry polymer at a 0.75 percent solution concentration with an aging time of not less than 60 minutes:
      a. Aging time shall be calculated after all of the polymer has been delivered to the mix/age tank.
      b. Total cycle time shall not exceed 100 minutes.
      c. The system shall be a modular design with all required components necessary for a complete system.
      d. Polymer preparation system:
         1) Manufacturers: The following or equal:
            a) UGSI Chemical Feed, Inc., Polyblend Model DP 500/DD4 with vacuum bag unloading system.
   2. Equipment included with the polymer system includes:
      a. Polymer storage hopper:
         1) Volumetric feeder.
         2) Wetting chamber.
         3) Mix/age and holding tank system with level controls.
         4) Tank mixer.
         5) Dilution water flow control valve.
         6) System control panel.
         7) Vacuum bag unloading system.

B. Pre-assemble and shop-test system to ensure compliance with pressure and operational requirements.

C. Design criteria:
   1. Polymer type: Dry.
   2. Active polymer consumption rate range: 3-lbs/day - 67-lbs/day.
   3. Final percent solution desired: 0.50.

D. Maximum water pressure available for dilution water is 40 pounds per square inch:
   1. For polymer feed systems requiring higher working differential pressures for dilution water, manufacturer must provide booster pumps and appurtenances as a part of a fully operational, pre-packaged system.
   2. Booster pump to be controlled by polymer blending unit and must be able to fit in the polymer storage area indicated on the Drawings without any interferences or changes to the specified system.

1.03 SUBMITTALS

A. Submit as specified in Section 01330 - Submittal Procedures.

B. Product data: As specified in Section 15050 - Common Work Results for Mechanical Equipment:
   a. Detailed specifications and shop drawings with both isometric and orthogonal views of the proposed installation, including dimensions, weights, and complete parts list.
   b. Hydraulic characteristics of the mixer.

C. Shop drawings: As specified in Section 15050 - Common Work Results for Mechanical Equipment.

D. Calculations: As specified in Section 15050 - Common Work Results for Mechanical Equipment.

E. Vendor operation and maintenance manuals: As specified in Section 01782 - Operation and Maintenance Manuals.

F. Commissioning submittals:
   1. Provide Manufacturer's Certificate of Source Testing as specified in Section 1756 - Commissioning.
   2. Provide Manufacturer's Certificate of Installation and Functionality Compliance as specified in Section 01756 - Commissioning.

1.04 WARRANTY

A. Provide warranty as specified in Section 01785 - Warranties and Bonds.

PART 2 PRODUCTS

2.01 MANUFACTURERS

A. The following or equal:
   1. UGSI Chemical Feed, Inc., Polyblend Model DP 500/DD4 with vacuum bag unloading system.
   2. Alternate manufacturers must provide a list of exceptions with their proposal detailing specific areas that do not meet the specification requirements in this Section, if applicable.
   3. Alternative manufacturers must have at least 5 years of experience in the design and manufacture of the equipment, and supply a list of not less than 10 operating installations as evidence of meeting the experience requirement.

2.02 MATERIALS

A. General:
   1. System shall be constructed with a Type 304 stainless steel chassis.
   2. Hardware shall be Type 304 stainless steel.
   3. Any components in contact with polymer or water shall be constructed of brass, stainless steel, or an inert plastic. Flow control valves shall be constructed of either brass, stainless steel, or cast iron.

2.03 EQUIPMENT

A. Polymer storage skid:
   1. Provide Type 304 stainless steel skid incorporating the dry polymer storage hopper system, volumetric feeder and dry polymer pneumatic conveyance system including an air compressor with 2.0-gallon reservoir.

2.04 COMPONENTS

A. Dry material storage.

B. A polymer storage hopper shall be provided having a minimum capacity of 2.5 cubic feet.

C. The storage hopper shall be outfitted with a vacuum bag unloading system to pneumatically transport dry polymer from 1 cubic foot bags to the dry polymer feeder hopper:
   1. The vacuum bag unloading system shall be a dual stage system. Single stage systems will not be considered equal and will not be accepted. The system shall include a true cyclonic power unit for wall mounting remote from the feeder/hopper. The power unit shall have 135” sealed vacuum (water lift), 118 scfm maximum air flow at 61 dBA, a 6-gallon translucent collection cannister and have a 6-foot power cord for operation on 115 VAC at 12 amps. The system shall include a true cyclonic separator mounted onto the top of the dry polymer feeder hopper with an open bottom and translucent viewing section to visualize polymer level. A 30-foot flexible vacuum hose shall be provided with on/off switch and plastic wand for withdrawing the powder. The polymer system supplier shall include all interconnection piping (designed for vacuum conveyance), fittings including inlet valves, outlet valves, and low voltage wiring for a complete and functional system.

D. The hopper shall be fabricated of not less than 16 gauge Type 304 stainless steel with straight sidewall to facilitate flow of the dry product to the ensuing screw feeder.

E. The storage hopper shall include a rotating paddle type low-level sensor.

F. Provide a stainless steel screen in the hopper to prevent foreign material from entering auger:
   1. The screen shall have 1/4-inch square area openings.
   2. The screen shall not be the woven type capable of coming apart and fouling the feed auger.

2.05 VOLUMETRIC FEEDER

A. Provide a volumetric feeder to accurately metering dry product from the storage hopper.

B. Powder shall be fed by a positive displacement auger.

C. Motor shall be variable speed. The motor shall not be less than ¼ horsepower, 90 VDC.

D. The discharge port of the volumetric feeder shall be completely enclosed in an acrylic chamber to prevent inadvertent drifting of airborne polymer dust and protect feeder discharge from environment.

E. The discharge port shall be fitted with a pneumatically operated valve to isolate dry polymer from the environment between cycles.

F. Volumetric feeder shall have a flexible vinyl liner to eliminate bridging. Feeders without this feature will not be acceptable.

G. Dry polymer shall rely on gravity to transfer from feed device to wetting device.

H. Systems utilizing any type pneumatic conveying system shall not be acceptable.

2.06 DILUTION WATER ASSEMBLY

A. All dilution water valves and instruments shall be mounted on the wetting system skid in a position for easy access.

B. Provide a pneumatically actuated, slow-closing, 1-1/2 inch ball valve for on/off control of make-down water flow.

C. Provide a 2-1/2 inch stainless steel liquid filled pressure gauge.

D. Provide a pressure switch to sense low water pressure. The pressure switch shall be rated NEMA 4X.

2.07 MIX/AGE TANK SYSTEM

A. The tank system shall be an over/under design with the mixing/aging tank on top, and the holding tank on the bottom.

2.08 MIX/AGE TANK

A. One 160 gallon usable capacity mix/age tank shall be provided to mix and age dry polymer solution. The polymer shall be fully wetted prior to entering the mix tank. The mix tank shall provide a minimum of 60 minutes of aging, after all of the polymer has been delivered to the mix/age tank, and shall effectively and thoroughly mix the polymer solution without damaging its molecular structure prior to transfer to the feed tank.

B. The mix tank shall be constructed of glass fiber-reinforced polyester resin:
   1. Construction shall be a one-piece molded shape with gelled surface to the interior of the tank.
   2. Shape of mixing tank will provide for a circular section at the bottom with a transition to a square section at mid-height.
   3. The mixing tank shall have a square section from mid-height to top providing optimum mixing pattern without relying on interior baffling.
   4. Mix tank shall have a minimum 160 working gallon capacity and be mounted vertically above holding tank.
   5. Gravity shall be used for solution transfer from the mix tank to the hold tank.
   6. The mix tank shall be equipped with an air-operated dump valve.
   7. Mixing time shall be adjustable via panel mounted operator interface module.
   8. Cycle shall be based on high/low level controls in mixing tank.

2.09 POLYMER WETTING DEVICE

A. Initial wetting of dry polymer with water shall be high-energy mechanical mixing to disperse individual polymer particles in water to prevent fisheye formation. Hydraulic or non-mechanical initial wetting shall not be acceptable.

B. The wetting chamber shall consist of two integrated zones:
   1. The initial area, called an acceleration zone, shall be a machined stainless steel volute with a tangential water connection and emulsion polymer injection fitting.
   2. Water introduced tangentially shall produce a deep vortex into the second stage mixer below.
   3. The second stage mixer, close coupled to the first, shall enclose a high energy mixing impeller imparting very-high mixing energy (G-vale of 15,000 sec^{-1}) to the vortex.
   4. The resultant vortex shall produce a suction force that ensures a vacuum for pulling any airborne dry polymer particles into the water vortex.
   5. The polymer and water shall flow into the center of the impeller and discharge at the perimeter via centrifugal force generated by the rotating impeller.

C. The polymer/water initial wetting shall be clearly visible through an acrylic barrel that also serves to enclose the dry polymer as it is fed into the water vortex.

D. Cleaning polymer buildup in the wetting chamber shall not require any components to be taken apart and shall be able to perform while the polymer system is operating.

E. The wetting device shall be driven by a 1 HP, 3450 RPM, TENV, washdown duty 56C frame motor.

2.10 WATER FLOW

A. Dilution water flow shall be maintained at a constant rate of 20 gpm by means of a flow control valve:
   1. A differential pressure indicator (with switch) shall be supplied to display water differential pressure.
   2. Low differential pressure switch shall shut down system and display text message and audible alarm after delay.

B. Water flow (on/off) shall be controlled by a pneumatic ball valve with spring to close for fail-safe operation.

2.11 TANK MIXER

A. The mixer shall be hollow-bladed stainless steel impeller:
   1. The impeller shall not be less than 2-ft in diameter.

B. The mixer diameter shall be minimum 60 percent of the tank diameter.

C. The mixer shaft shall be stainless steel with clear PVC sleeve to direct polymer slurry from the wetting device into hollow-bladed impeller.

D. Centrifugal force generated by the low speed, rotating hollow impeller shall draw the slurry into the center of the impeller:
   1. The slurry shall travel radially the length of the impeller blades and exit continuously at the tips of the rotating impeller.
   2. The action shall also cause material in the tank to recirculate through an opening in the center of the impeller, creating the maximum low energy turbulence.
   3. At no time shall prepared polymer come in contact with a propeller type mixer.

E. The mix tank impeller shall be driven by a 1 ½ HP, 1750 RPM, TEFC, washdown duty 56C frame type motor coupled with a right angle gear reducer. The gear reducer and motor shall be mounted on a channel crossing the mixing tank. The impeller shall be coupled to the gear reducer.

2.12 LEVEL SENSOR

A. Provide conductivity level probes and back-up float switch for high-high level in the mix/age tank for cycle control.

2.13 FEED TANK

A. One 160 gallon usable capacity feed tank shall be provided to store dry polymer solution prior to and during solution metering. The polymer shall be fully aged and ready for use prior to being transferred to the feed tank.

B. The feed tank shall be constructed of glass fiber-reinforced polyester resin.

2.14 LEVEL SENSOR

A. Provide float switches in the feed tank for cycle control.

2.15 COMPRESSED AIR SYSTEM

A. A 1/3 horsepower diaphragm compressor and 2.0 gallon reservoir including tank safety valve, pressure switch for automatic cycling and permanently lubricated motor and bearings, including mounting, piping and wiring to control panel. Compressor will be located on the disperser skid.

2.16 VENDOR POLYMER PREPARATION SYSTEM CONTROL PANEL

A. General:
   1. One control panel shall be supplied to control the entire dry polymer preparation system.
   2. The control panel enclosure and all electrical and instrumentation components shall conform to the requirements stated in the Contract Documents.
   3. Vendor control panels and all components shall be UL listed and labeled.

B. Vendor control panel:
   1. The system shall have a control panel for fully automatic control:
      a. Control panel construction shall be NEMA 4X fiberglass reinforced plastic or Type 304 or Type 316 stainless steel.
      b. Panel shall include door mounted color touch screen operator interface module, and programmable controller (inside cabinet) for sequencing control.
      c. A power light and an emergency stop pushbutton shall be installed on the front of the panel.
      d. Panel shall include starters, overload relays, transformer for control power, instrument power supply, interposing relays and short circuit fuse protection for all components.
      e. Wiring shall be enclosed in wireway separating low voltage and power wiring as required. All wiring and terminals shall be numbered and color coded as appropriate.
      f. Power wiring and control wiring shall be separated by barriers.
   2. Operator interface shall be a color touch screen type with screens indicating mode of operation for major components. The operator interface shall include a message display screen, system timers screen, system run time screen, polymer feed calibration screen, batch counters screen and alarm screen. The operator interface shall include displays for major component status and softkeys to function as switches.
   3. Operator interface shall display batch count with a resettable counter and a non-resettable counter.
   4. Operator interface shall display motor run time in hours for all unit motors. Hour counter shall be non-resettable.
   5. Operator interface shall allow access to timers so that timer settings can be viewed and-or changed for polymer feed time, tank mix time, flush time and feed calibration. Each timer shall be displayed in count-up fashion to determine remaining time for cycle.
   6. Operator interface shall display specific alarm condition in words to facilitate troubleshooting. An alarm history shall also be available to view previous alarm conditions.
   7. Operator interface shall contain alarm silence and alarm reset pushbuttons.
   8. Operator interface can be programmed with a security passcode.
   9. Each screen shall have a main menu softkey to easily access the main menu.
   10. Each screen shall have an alarm screen softkey to easily access the alarm menu.
   11. Each major component shall have its own screen with Hand/Off/Auto softkeys and start and stop pushbutton softkeys for major components in the Hand mode. A pictorial representation of the system with on/off status of major components shall be supplied.

2.17 PROCESS CYCLE

A. Sequential operation shall be initiated by low level in mix tank:
   1. This shall start the tank mixer, disperser, water, and polymer feeder to begin in a timed sequence, preparing a batch of polymer at a preset concentration.
   2. Polymer batch concentration is selected via a panel mounted operator interface module.
   3. A high level in mix tank shall initiate the shutdown sequence.
   4. The shutdown shall turn off polymer feeder (assuming it has not completed timing sequence) while allowing disperser water flow to flush disperser system and plumbing of activated polymer.

PART 3 EXECUTION

3.01 INSTALLATION

A. Polymer feed systems shall be installed under the direction of the system supplier in strict conformance with the manufacturer's installation instructions and with favorable review shop drawings.

B. Checkout of final installation, start-up, calibration, and instruction of operating personnel shall be performed by an authorized representative of the manufacturer.

C. Alignment of piping may vary from that indicated on the Drawings. Upon acceptance by the Engineer, align piping to suit the equipment furnished, without additional cost to Owner.

D. Contractor to flush out potable water line until water discharged from line is clear and free of debris.

3.02 COMMISSIONING

A. As specified in Section 01756 - Commissioning and this Section.

B. Manufacturer services:
   1. Provide certificates:
      a. Manufacturer’s Certificate of Source Testing.
      b. Manufacturer’s Certificate of Installation and Functionality Compliance.
   2. Manufacturer’s Representative onsite requirements:
      a. Installation: 1 trip, 1 day minimum.
      b. Functional Testing: 2 trips, 2 day minimum each.
   3. Training:
      a. Maintenance: 4 hours per session, 2 sessions.
      b. Operation: 4 hours per session, 2 sessions.
   4. Process operational period:
      a. As required by Owner or Contractor.

C. Source testing:
   1. Test as specified in Section 15958 - Mechanical Equipment Testing.
   2. Polymer preparation system:
      a. Test witnessing: Not witnessed.
      b. Conduct Level 1 General Equipment Performance Test.

c. Conduct Level 1 Vibration Test.
d. Conduct Level 1 Noise Test.

3. Electrical Instrumentation and Controls:
   a. Test witnessing: Not witnessed.
   b. Conduct testing as specified in Section 17950 - Commissioning for Instrumentation and Controls.

D. Functional testing:
   1. Polymer preparation system:
      a. Test witnessing: Witnessed.
      b. Conduct Level 2 General Equipment Performance Test.
      c. Conduct Level 2 Vibration Test.
      d. Conduct Level 2 Noise Test.
      e. Verify that all connections are watertight.
      f. During testing, Contractor shall make all final adjustments necessary to place equipment in satisfactory working order.
      g. Test and calibrate all controls, switches, automatic valves, and other instrumentation and control equipment associated with the polymer feed system specified in this Section, in accordance with the manufacturer's printed instruction over the full operating range of the equipment.
   2. Electrical Instrumentation and Controls:
      a. Test witnessing: Witnessed.
      b. Conduct testing as specified in Section 17950 - Commissioning for Instrumentation and Controls.

1.01 ADDITIONAL SERVICES

A. Manufacturer's representative shall include a one-day site visit during the first year of operation coordinated with the Owner.

END OF SECTION

New Section

SECTION 17311[AD3]

FLOW MEASUREMENT: VENTURI FLOWMETERS

PART 1 GENERAL

1.01 SUMMARY

A. Section includes:
   1. Venturi flowmeters.

B. Provide all instruments identified in the Contract Documents.

1.02 REFERENCES

A. As specified in Section 17050 - Common Work Results for Process Control and Instrumentation Systems.

B. As specified in Section 17406 - Pressure/Vacuum Measurement: Differential.

1.03 DEFINITIONS

A. As specified in Section 17050 - Common Work Results for Process Control and Instrumentation Systems.

B. Specific definitions:
   1. Inlet: The part of the Venturi flow tube where the diameter is the largest. The point where the “high pressure tap” is placed.
   2. Throat: The part of the Venturi flow tube where the diameter is constricted down to create the differential pressure. The “low pressure tap” is placed at the center of the throat where the flow tube diameter is smallest.
   3. Beta ratio: The ratio of the throat diameter to the inlet diameter. This number is required to be constant to accurately measure flow.
   4. Headloss: The pressure loss incurred by the introduction of the Venturi flow tube.
   5. Discharge coefficient: The ratio of the actual flow rate to the theoretical flow rate.
   6. Reynolds number: Dimensionless parameter expressing the ratio between the inertia and viscous forces in the process fluid. It depends on the density (ρ), velocity (V), and viscosity (μ) of the process fluid and the diameter (d) of the pipe ($Re=\rho VD/\mu$).

1.04 SUBMITTALS

A. Furnish submittals as specified in Sections 01330 - Submittal Procedures and 17050 - Common Work Results for Process Control and Instrumentation Systems.

B. Venturi flow tube sizing calculation:
   1. Provide calculation for each Venturi flow tube using manufacturer’s standard sizing program.

2. Include the following at a minimum:
    a. Beta ratio.
    b. Venturi flow tube inlet diameter.
    c. Venturi flow tube throat diameter.
    d. Normal operating process temperature and pressure.
    e. Expected differential pressure at normal and maximum flow rates.
    f. Permanent pressure loss at normal and maximum flow rates.

C. Provide complete documentation covering the traceability of all calibration instruments.

1.05 QUALITY ASSURANCE

A. As specified in Section 17050 - Common Work Results for Process Control and Instrumentation Systems.

B. Examine the complete set of Contract Documents and verify that the instruments are compatible with the installed conditions including:
    1. Process conditions: Fluids, pressures, temperatures, flows, materials etc.
    2. Physical conditions:
        a. Installation and mounting requirements.
        b. Location within the process.
        c. Accessories: Verify that all required accessories are provided and are compatible with the process conditions and physical installation.

C. Notify the Engineer if any installation condition does not meet the instrument manufacturer's recommendations or specifications.

1.06 DELIVERY, STORAGE, AND HANDLING

A. As specified in Section 17050 - Common Work Results for Process Control and Instrumentation Systems.

1.07 PROJECT OR SITE CONDITIONS

A. Project environmental conditions as specified in Section 17050 - Common Work Results for Process Control and Instrumentation Systems.
    1. Provide instruments suitable for the installed site conditions including, but not limited to, material compatibility, site altitude, site seismic conditions, humidity, and process and ambient temperatures.

1.08 WARRANTY

A. As specified in Section 17050 - Common Work Results for Process Control and Instrumentation Systems.

B. Provide warranty for the Venturi flowmeter (not including the electronics) a period of not less than 25 years against defects in materials and workmanship.

1.09 MAINTENANCE

A. Furnish all parts, materials, fluids, etc. necessary for operation, maintenance, and calibration purposes throughout the warranty period. Deliver all these supplies before project substantial completion.

PART 2 PRODUCTS

2.01 MANUFACTURERS

A. One of the following or equal:
   1. PFS (Primary Flow Signal).
   2. BIF (Builder's Iron Foundry).
   3. Badger Meter (Wyatt Engineering).

2.02 MANUFACTURED UNITS

A. Venturi flow tube meter:
   1. General:
      a. Venturi flowmeter systems to utilize the actual beta value, discharge coefficient, and differential pressure readings to determine the volumetric flow rate.
      b. IP measurement with the inlet and throat taps at the same pressure.
   2. Performance requirements:
      a. Accuracy:
         1) Flow tube: 0.25 percent of flow rate for flows at Reynolds numbers of 75,000 or more for 8:1 turndown.
         2) Flow tube and transmitter combined accuracy not to exceed 0.5 percent for 8:1 turndown.
   3. Element:
      a. Flow tube:
         1) Meter manufacturer shall verify that materials of construction are sufficient for the intended application and service.
         2) Provide ANSI type 150 pound flanged ends unless otherwise noted.
      b. Throat lines and pressure tap bushings:
         1) Type 316 stainless steel.
      c. Pressure taps:
         1) Placed on the sides of the meter at centerline at 3 and 9 o'clock positions.
         2) 2 low-pressure taps 180 degrees apart on horizontal or vertical centerline (for horizontal and vertical flow, respectively).
         3) 2 high-pressure taps 180 degrees apart on horizontal or vertical centerline (for horizontal and vertical flow, respectively).
      d. Capillary wires and tubing:
         1) Materials of construction and lengths shall be reviewed and commented on by Engineer.
         2) Bending radius not less than 2 inches.
   4. Transmitter:
      a. As specified in Section 17406 - Pressure/Vacuum Measurement: Differential.

5. Components:
    a. Vent ports (on top) and drains (on bottom) on a 90-degree plane to the metering taps.
    b. Bleed valve to expel entrained air for all non-diaphragm systems (as required by Engineer).
    c. Plugging protection device that does not impede the flow.

2.03 ACCESSORIES

A. Nameplates:
    1. Stainless steel:
        a. Manufacturer information.
        b. ANSI flange rating.
        c. Beta value.
        d. Discharge coefficient.
        e. Process pressure operating ranges.
        f. Process temperature operating ranges.
        g. Arrow with direction of flow.
        h. Pipe inside diameter dimension.
        i. Tap size.

2.04 SOURCE QUALITY CONTROL

A. As specified in Section 17050 - Common Work Results for Process Control and Instrumentation Systems.

B. Factory calibrate each instrument with a minimum 3-point calibration or according to Manufacturer's standard at a facility that is traceable to the NIST.
    1. Submit calibration data sheets to the Engineer at least 30 days before shipment of the instruments to the project site.

PART 3 EXECUTION

3.01 EXAMINATION

A. Examine the installation location for the instrument and verify that the instrument will work properly when installed:
    1. Notify the Engineer promptly if any installation condition does not meet the instrument manufacturer's recommendations or specifications.

3.02 PREPARATION (NOT USED)

3.03 INSTALLATION

A. As specified in Section 17050 - Common Work Results for Process Control and Instrumentation Systems.

B. Coordinate the installation with all trades to ensure that the mechanical system has all necessary appurtenances including weld-o-lets, valves, etc. for proper installation of instruments.

C. Mount all transmitters below pressure taps at a minimum slope of one inch per foot unless an alternative method is required by Engineer.

D. Insure that all transmitters are accessible for maintenance.

3.04 FIELD QUALITY CONTROL

A. As specified in Section 17050 - Common Work Results for Process Control and Instrumentation Systems.

B. Provide manufacturer's services to perform start-up and calibration or verification.

3.05 ADJUSTING

A. As specified in Section 17950 - Commissioning for Instrumentation and Controls.

3.06 CLEANING

A. As specified in Section 17050 - Common Work Results for Process Control and Instrumentation Systems.

3.07 DEMONSTRATION AND TRAINING

A. As specified in Section 17050 - Common Work Results for Process Control and Instrumentation Systems.

3.08 PROTECTION

A. As specified in Section 17050 - Common Work Results for Process Control and Instrumentation Systems.

3.09 SCHEDULES

A. The provided information does not necessarily include all required instruments. Provide all instruments identified in the Contract Documents:
   1. Instruments may be indicated on the Drawings, specified in the Specifications, or both.

END OF SECTION

A/E:	Carollo Engineers	VENTURI FLOWMETERS						
						Spec. No.		Rev.
Contractor:		No	By	Date	Revision	17311		
Project:						Contract		Date
Customer:								
Plant:						Req.		P.O.
Location:								
BOM No.:						By	Chk	App
File:								

1		Instrument Tag No.	FE-	
2		Service		
3		P&ID		
4		Flow tube Material	316 Stainless Steel: Other:	316 Stainless Steel: Other:
5	V	Beta (d/D)		
6	E	Throat Diameter		
7	N	Pipe Size		
8	T	Pipe Inside Diameter		
9	U	Number of Taps		
10	R	Tap Location		
11	I	Tap Size	1/2-Inch: √	1/2-Inch: Other:
12		Pressure Drop at Norm Flow		
13	F	Perm. Press. Drop at Norm Flow		
14	L	Flange Material	316 Stainless Steel: Other:	316 Stainless Steel: Other:
15	O	Flange Rating	ANSI 150 lb.: √	ANSI 150 lb.: ANSI 300 lb.: Other:
16	W	Face to Face Length		
17	T	Interior Paint/Coating Type		
18	U	Options	Inspection Hole: Vent/Drain:	
19	B	Purge System	Automatic: Manual:	
20	E	Other		
21		Other		
22		Other		
23		Fluid		
24		Fluid State	Liquid: Gas:	Liquid: Gas:
25		Pressure		
26	F	Temperature		
27	L	Specific Gravity		
28	U	Reynolds Number		
29	I	Max Flow Units		
30	D	Max Velocity Units		
31		Norm Flow / Min Flow		
32		Max Temp / Min Temp		
33		Max Press / Min Press		
34		Other		
35		Transmitter	See Transmitter Data Sheet in Section 17406 - Pressure/Vacuum Measurement: Differential.	See Transmitter Data Sheet in Section. 17406 - Pressure/Vacuum Measurement: Differential
36		Calibrated Range		
37		Combined Accuracy		
38		Venturi Flow tube Manufacturer		
39		Venturi Flow tube Model No.		

Notes:
Refer to Section 17406 - Pressure/Vacuum Measurement: Differential for additional differential pressure transmitter requirements.

AD3 Addendum No. 3

PLC I/O Listing for PLC-25.0000

Drawing	Tag	I/O	Location	Description	Service	(E/F)
25N53	AUX1-25.0011	DI	PLC-25.0000	RUNNING	CIP MOTOR	
25N51	AUX1-25.0101	DI	PLC-25.0000	RUNNING	RO FEED PUMP NO.1	
25N51	AUX1-25.0104	DI	PLC-25.0000	RUNNING	RO BOOSTER PUMP NO.1	
25N51	AUX1-25.0201	DI	PLC-25.0000	RUNNING	RO FEED PUMP NO.2	
25N51	AUX1-25.0204	DI	PLC-25.0000	RUNNING	RO BOOSTER PUMP NO.2	
25N52	AUX1-25.0301	DI	PLC-25.0000	RUNNING	RO FEED PUMP NO.3	
25N52	AUX1-25.0401	DI	PLC-25.0000	RUNNING	RO FEED PUMP NO.4	
25N52	AUX1-25.0404	DI	PLC-25.0000	RUNNING	RO BOOSTER PUMP NO.4	
25N53	AUX1-25.0903	DI	PLC-25.0000	RUNNING	FLUSH MOTOR	
25N90	AUX1-79.3101	DI	PLC-25.0000	RUNNING	AIR HANDLING UNIT AHU-101	
25N90	AUX1-79.3105	DI	PLC-25.0000	RUNNING	EXHAUST FAN EF-101	
25N90	AUX1-79.3106	DI	PLC-25.0000	RUNNING	SUPPLY FAN SF-101	
25N90	AUX1-79.3107	DI	PLC-25.0000	RUNNING	EXHAUST FAN EF-102	
25N90	AUX1-79.3108	DI	PLC-25.0000	RUNNING	SUPPLY FAN SF-102	
25N90	AUX1-79.3109	DI	PLC-25.0000	RUNNING	EXHAUST FAN EF-103	
25N90	AUX1-79.3110	DI	PLC-25.0000	RUNNING	EXHAUST FAN EF-104	
25N53	AUX2-25.0011	DI	PLC-25.0000	FAILED	CIP MOTOR	
25N51	AUX2-25.0101	DI	PLC-25.0000	FAILED	RO FEED PUMP NO.1	
25N51	AUX2-25.0104	DI	PLC-25.0000	FAILED	RO BOOSTER PUMP NO.1	
25N51	AUX2-25.0201	DI	PLC-25.0000	FAILED	RO FEED PUMP NO.2	
25N51	AUX2-25.0204	DI	PLC-25.0000	FAILED	RO BOOSTER PUMP NO.2	
25N52	AUX2-25.0301	DI	PLC-25.0000	FAILED	RO FEED PUMP NO.3	
25N52	AUX2-25.0401	DI	PLC-25.0000	FAILED	RO FEED PUMP NO.4	
25N52	AUX2-25.0404	DI	PLC-25.0000	FAILED	RO BOOSTER PUMP NO.4	
25N53	AUX2-25.0903	DI	PLC-25.0000	FAILED	FLUSH MOTOR	
25N90	AUX2-79.3101	DI	PLC-25.0000	FAILED	AIR HANDLING UNIT AHU-101	
25N53	FSH-25.0017	DI	PLC-25.0000		FLOW SWITCH HIGH	

PLC I/O Listing for PLC-25.0000

Drawing	Tag	I/O	Location	Description	Service	(E/F)
25N53	FSL-25.0011	DI	PLC-25.0000		THERMAL FLOW SWITCH	
25N51	FSL-25.0101	DI	PLC-25.0000	FLOW	THERMAL FLOW SWITCH	
25N51	FSL-25.0104	DI	PLC-25.0000	FLOW	THERMAL FLOW SWITCH	
25N51	FSL-25.0201	DI	PLC-25.0000	FLOW	THERMAL FLOW SWITCH	
25N51	FSL-25.0204	DI	PLC-25.0000	FLOW	THERMAL FLOW SWITCH	
25N52	FSL-25.0301	DI	PLC-25.0000	FLOW	THERMAL FLOW SWITCH	
25N52	FSL-25.0304	DI	PLC-25.0000	FLOW	THERMAL FLOW SWITCH	
25N52	FSL-25.0401	DI	PLC-25.0000	FLOW	THERMAL FLOW SWITCH	
25N52	FSL-25.0404	DI	PLC-25.0000	FLOW	THERMAL FLOW SWITCH	
21N10	HSAR-21.0601A	DI	PLC-25.0000	REMOTE	RAW WATER TO WTP ISOLATION VALVE	
21N10	HSAR-21.0601B	DI	PLC-25.0000	REMOTE	RAW WATER TO WTP ISOLATION VALVE	
21N10	HSAR-21.0602E	DI	PLC-25.0000	REMOTE	ELECTRIC DISCRETE VALVE RUN OPEN/CLOSE	
21N10	HSAR-21.0602F	DI	PLC-25.0000	REMOTE	ELECTRIC DISCRETE VALVE RUN OPEN/CLOSE	
25N59	HSAR-25.0001F	DI	PLC-25.0000	REMOTE	BRINE LINE ISOLATION VALVE AT WTP	
25N53	HSAR-25.0007E	DI	PLC-25.0000	REMOTE	RO PERMEATE ISOLATION VALVE	
25N53	HSAR-25.0008F	DI	PLC-25.0000	REMOTE	RO PERMEATE ISOLATION VALVE	
25N53	HSAR-25.0011	DI	PLC-25.0000	REMOTE	CIP MOTOR	
25N53	HSAR-25.0012	DI	PLC-25.0000	REMOTE	ELECTRIC ANALOG MODULATING VALVE	
25N51	HSAR-25.0101	DI	PLC-25.0000	REMOTE	RO FEED PUMP NO.1	
25N51	HSAR-25.0101A	DI	PLC-25.0000	REMOTE	ELECTRIC DISCRETE VALVE RUN OPEN/CLOSE	
25N51	HSAR-25.0101B	DI	PLC-25.0000	REMOTE	ELECTRIC DISCRETE VALVE RUN OPEN/CLOSE	
25N51	HSAR-25.0103A	DI	PLC-25.0000	REMOTE	ELECTRIC ANALOG MODULATING VALVE	
25N51	HSAR-25.0104	DI	PLC-25.0000	REMOTE	RO BOOSTER PUMP NO.1	
25N51	HSAR-25.0201	DI	PLC-25.0000	REMOTE	RO FEED PUMP NO.2	
25N51	HSAR-25.0201A	DI	PLC-25.0000	REMOTE	ELECTRIC DISCRETE VALVE RUN OPEN/CLOSE	
25N51	HSAR-25.0201B	DI	PLC-25.0000	REMOTE	ELECTRIC DISCRETE VALVE RUN OPEN/CLOSE	
25N51	HSAR-25.0203A	DI	PLC-25.0000	REMOTE	ELECTRIC ANALOG MODULATING VALVE	

PLC I/O Listing for PLC-25.0000

Drawing	Tag	I/O	Location	Description	Service	(E/F)
25N51	HSAR-25.0204	DI	PLC-25.0000	REMOTE	RO BOOSTER PUMP NO.2	
25N52	HSAR-25.0301	DI	PLC-25.0000	REMOTE	RO FEED PUMP NO.3	
25N52	HSAR-25.0301A	DI	PLC-25.0000	REMOTE	ELECTRIC DISCRETE VALVE RUN OPEN/CLOSE	
25N52	HSAR-25.0301B	DI	PLC-25.0000	REMOTE	ELECTRIC DISCRETE VALVE RUN OPEN/CLOSE	
25N52	HSAR-25.0303A	DI	PLC-25.0000	REMOTE	ELECTRIC ANALOG MODULATING VALVE	
25N52	HSAR-25.0401	DI	PLC-25.0000	REMOTE	RO FEED PUMP NO.4	
25N52	HSAR-25.0401A	DI	PLC-25.0000	REMOTE	ELECTRIC DISCRETE VALVE RUN OPEN/CLOSE	
25N52	HSAR-25.0401B	DI	PLC-25.0000	REMOTE	ELECTRIC DISCRETE VALVE RUN OPEN/CLOSE	
25N52	HSAR-25.0403A	DI	PLC-25.0000	REMOTE	ELECTRIC ANALOG MODULATING VALVE	
25N52	HSAR-25.0404	DI	PLC-25.0000	REMOTE	RO BOOSTER PUMP NO.4	
25N53	HSAR-25.0903	DI	PLC-25.0000	REMOTE	FLUSH MOTOR	
25N53	HSAR-25.0903A	DI	PLC-25.0000	REMOTE	RO PERMEATE TO FLUSH TANK ISOLATION VALE	
25N53	HSAR-25.0903E	DI	PLC-25.0000	REMOTE	ELECTRIC ANALOG MODULATING VALVE	
25N60	HSAR-26.0301A	DI	PLC-25.0000	REMOTE	BLEND WATER FLOW CONTROL VALVE	
25N60	HSAR-26.0301B	DI	PLC-25.0000	REMOTE	BLEND WATER FLOW CONTROL VALVE	
25N60	HSAR-66.0801D	DI	PLC-25.0000	REMOTE	SULFURIC ACID ISOLATION VALVE	
25N53	HSAR-71.5002	DI	PLC-25.0000	REMOTE	POTABLE WATER FROM GAC FILTER ISOLATION VALVE	
25N90	HSAR-79.3105	DI	PLC-25.0000	REMOTE	EXHAUST FAN EF-101	
25N90	HSAR-79.3106	DI	PLC-25.0000	REMOTE	SUPPLY FAN SF-101	
25N90	HSAR-79.3107	DI	PLC-25.0000	REMOTE	EXHAUST FAN EF-102	
25N90	HSAR-79.3108	DI	PLC-25.0000	REMOTE	SUPPLY FAN SF-102	
25N90	HSAR-79.3109	DI	PLC-25.0000	REMOTE	EXHAUST FAN EF-103	
25N90	HSAR-79.3110	DI	PLC-25.0000	REMOTE	EXHAUST FAN EF-104	
25N54	JS1-25.0000	DI	PLC-25.0000	24V PWR SUP FAIL	PCM CABINET	
25N54	JS2-25.0000	DI	PLC-25.0000	24V PWR SUP FAIL	PCM CABINET	
25N54	JS3-25.0000	DI	PLC-25.0000	DIODE BRIDGE FAIL	PCM CABINET	
21N10	LSH-21.0605	DI	PLC-25.0000		LEVEL SWITCH HIGH	

PLC I/O Listing for PLC-25.0000

Drawing	Tag	I/O	Location	Description	Service	(E/F)
21N10	LSH-21.0606	DI	PLC-25.0000		LEVEL SWITCH HIGH	
21N10	LSH-21.0608	DI	PLC-25.0000	LEVEL	LEVEL SWITCH HIGH	
25N53	LSH-25.0019	DI	PLC-25.0000		SUMP LEVEL	
25N59	LSH-25.0909	DI	PLC-25.0000	LEVEL	LEVEL SWITCH HIGH	
25N53	LSLL-25.0019	DI	PLC-25.0000		SUMP LEVEL	
25N90	PDSH-79.3101	DI	PLC-25.0000	DIRTY FILTER	PRESSURE DIFFERENTIAL TRANSMITTER	
25N53	PSH-25.0903	DI	PLC-25.0000	PRESS	PRESSURE SWITCH HIGH	
25N53	PSL-25.0015	DI	PLC-25.0000		PRESSURE SWITCH LOW	
25N51	PSL-25.0101	DI	PLC-25.0000		PRESSURE TRANSMITTER	
25N51	PSL-25.0104	DI	PLC-25.0000	PRESS	PRESSURE SWITCH LOW	
25N51	PSL-25.0201	DI	PLC-25.0000		PRESSURE TRANSMITTER	
25N51	PSL-25.0204	DI	PLC-25.0000	PRESS	PRESSURE SWITCH LOW	
25N52	PSL-25.0301	DI	PLC-25.0000		PRESSURE TRANSMITTER	
25N52	PSL-25.0304	DI	PLC-25.0000	PRESS	PRESSURE SWITCH LOW	
25N52	PSL-25.0401	DI	PLC-25.0000		PRESSURE TRANSMITTER	
25N52	PSL-25.0404	DI	PLC-25.0000	PRESS	PRESSURE SWITCH LOW	
25N54	TSH-25.0000	DI	PLC-25.0000	PLC TEMP	PCM CABINET	
25N53	TSH-25.0011	DI	PLC-25.0000	TEMP	CIP MOTOR	
25N51	TSH-25.0101	DI	PLC-25.0000	TEMP	RO FEED PUMP NO.1	
25N51	TSH-25.0104	DI	PLC-25.0000	TEMP	RO BOOSTER PUMP NO.1	
25N51	TSH-25.0201	DI	PLC-25.0000	TEMP	RO FEED PUMP NO.2	
25N51	TSH-25.0204	DI	PLC-25.0000	TEMP	RO BOOSTER PUMP NO.2	
25N52	TSH-25.0301	DI	PLC-25.0000	TEMP	RO FEED PUMP NO.3	
25N52	TSH-25.0401	DI	PLC-25.0000	TEMP	RO FEED PUMP NO.4	
25N52	TSH-25.0404	DI	PLC-25.0000	TEMP	RO BOOSTER PUMP NO.4	
25N53	TSH-25.0903	DI	PLC-25.0000	TEMP	FLUSH MOTOR	
25N54	XA5-25.0000	DI	PLC-25.0000	ES1 FAIL	UPS POWER STATUS	

PLC I/O Listing for PLC-25.0000

Drawing	Tag	I/O	Location	Description	Service	(E/F)
25N90	XS1-79.3101	DI	PLC-25.0000	SMOKE	SMOKE DETECTOR	
25N90	XS1-79.3106	DI	PLC-25.0000	SMOKE	SMOKE DETECTOR	
25N90	XS1-79.3108	DI	PLC-25.0000	SMOKE	SMOKE DETECTOR	
25N54	ZS-25.0000	DI	PLC-25.0000	INTRUSION	PCM CABINET	
21N10	ZSC-21.0601A	DI	PLC-25.0000	CLOSED	RAW WATER TO WTP ISOLATION VALVE	
21N10	ZSC-21.0601B	DI	PLC-25.0000	CLOSED	RAW WATER TO WTP ISOLATION VALVE	
21N10	ZSC-21.0602E	DI	PLC-25.0000	CLOSED	ELECTRIC DISCRETE VALVE RUN OPEN/CLOSE	
21N10	ZSC-21.0602F	DI	PLC-25.0000	CLOSED	ELECTRIC DISCRETE VALVE RUN OPEN/CLOSE	
25N59	ZSC-25.0001F	DI	PLC-25.0000	CLOSED	BRINE LINE ISOLATION VALVE AT WTP	
25N53	ZSC-25.0007E	DI	PLC-25.0000	CLOSED	RO PERMEATE ISOLATION VALVE	
25N53	ZSC-25.0008F	DI	PLC-25.0000	CLOSED	RO PERMEATE ISOLATION VALVE	
25N53	ZSC-25.0012	DI	PLC-25.0000	CLOSED	ELECTRIC ANALOG MODULATING VALVE	
25N51	ZSC-25.0101A	DI	PLC-25.0000	CLOSED	ELECTRIC DISCRETE VALVE RUN OPEN/CLOSE	
25N51	ZSC-25.0101B	DI	PLC-25.0000	CLOSED	ELECTRIC DISCRETE VALVE RUN OPEN/CLOSE	
25N51	ZSC-25.0103A	DI	PLC-25.0000	CLOSED	ELECTRIC ANALOG MODULATING VALVE	
25N51	ZSC-25.0201A	DI	PLC-25.0000	CLOSED	ELECTRIC DISCRETE VALVE RUN OPEN/CLOSE	
25N51	ZSC-25.0201B	DI	PLC-25.0000	CLOSED	ELECTRIC DISCRETE VALVE RUN OPEN/CLOSE	
25N51	ZSC-25.0203A	DI	PLC-25.0000	CLOSED	ELECTRIC ANALOG MODULATING VALVE	
25N52	ZSC-25.0301A	DI	PLC-25.0000	CLOSED	ELECTRIC DISCRETE VALVE RUN OPEN/CLOSE	
25N52	ZSC-25.0301B	DI	PLC-25.0000	CLOSED	ELECTRIC DISCRETE VALVE RUN OPEN/CLOSE	
25N52	ZSC-25.0303A	DI	PLC-25.0000	CLOSED	ELECTRIC ANALOG MODULATING VALVE	
25N52	ZSC-25.0401A	DI	PLC-25.0000	CLOSED	ELECTRIC DISCRETE VALVE RUN OPEN/CLOSE	
25N52	ZSC-25.0401B	DI	PLC-25.0000	CLOSED	ELECTRIC DISCRETE VALVE RUN OPEN/CLOSE	
25N52	ZSC-25.0403A	DI	PLC-25.0000	CLOSED	ELECTRIC ANALOG MODULATING VALVE	
25N53	ZSC-25.0903A	DI	PLC-25.0000	CLOSED	RO PERMEATE TO FLUSH TANK ISOLATION VALE	
25N53	ZSC-25.0903E	DI	PLC-25.0000	CLOSED	ELECTRIC ANALOG MODULATING VALVE	
25N60	ZSC-26.0301A	DI	PLC-25.0000	CLOSED	BLEND WATER FLOW CONTROL VALVE	

PLC I/O Listing for PLC-25.0000

Drawing	Tag	I/O	Location	Description	Service	(E/F)
25N60	ZSC-26.0301B	DI	PLC-25.0000	CLOSED	BLEND WATER FLOW CONTROL VALVE	
25N60	ZSC-66.0801D	DI	PLC-25.0000	CLOSED	SULFURIC ACID ISOLATION VALVE	
25N53	ZSC-71.5002	DI	PLC-25.0000	CLOSED	POTABLE WATER FROM GAC FILTER ISOLATION VALVE	
21N10	ZSO-21.0601A	DI	PLC-25.0000	OPENED	RAW WATER TO WTP ISOLATION VALVE	
21N10	ZSO-21.0601B	DI	PLC-25.0000	OPENED	RAW WATER TO WTP ISOLATION VALVE	
21N10	ZSO-21.0602E	DI	PLC-25.0000	OPENED	ELECTRIC DISCRETE VALVE RUN OPEN/CLOSE	
21N10	ZSO-21.0602F	DI	PLC-25.0000	OPENED	ELECTRIC DISCRETE VALVE RUN OPEN/CLOSE	
25N59	ZSO-25.0001F	DI	PLC-25.0000	OPENED	BRINE LINE ISOLATION VALVE AT WTP	
25N53	ZSO-25.0007E	DI	PLC-25.0000	OPENED	RO PERMEATE ISOLATION VALVE	
25N53	ZSO-25.0008F	DI	PLC-25.0000	OPENED	RO PERMEATE ISOLATION VALVE	
25N53	ZSO-25.0012	DI	PLC-25.0000	OPENED	ELECTRIC ANALOG MODULATING VALVE	
25N51	ZSO-25.0101A	DI	PLC-25.0000	OPENED	ELECTRIC DISCRETE VALVE RUN OPEN/CLOSE	
25N51	ZSO-25.0101B	DI	PLC-25.0000	OPENED	ELECTRIC DISCRETE VALVE RUN OPEN/CLOSE	
25N51	ZSO-25.0103A	DI	PLC-25.0000	OPENED	ELECTRIC ANALOG MODULATING VALVE	
25N51	ZSO-25.0201A	DI	PLC-25.0000	OPENED	ELECTRIC DISCRETE VALVE RUN OPEN/CLOSE	
25N51	ZSO-25.0201B	DI	PLC-25.0000	OPENED	ELECTRIC DISCRETE VALVE RUN OPEN/CLOSE	
25N51	ZSO-25.0203A	DI	PLC-25.0000	OPENED	ELECTRIC ANALOG MODULATING VALVE	
25N52	ZSO-25.0301A	DI	PLC-25.0000	OPENED	ELECTRIC DISCRETE VALVE RUN OPEN/CLOSE	
25N52	ZSO-25.0301B	DI	PLC-25.0000	OPENED	ELECTRIC DISCRETE VALVE RUN OPEN/CLOSE	
25N52	ZSO-25.0303A	DI	PLC-25.0000	OPENED	ELECTRIC ANALOG MODULATING VALVE	
25N52	ZSO-25.0401A	DI	PLC-25.0000	OPENED	ELECTRIC DISCRETE VALVE RUN OPEN/CLOSE	
25N52	ZSO-25.0401B	DI	PLC-25.0000	OPENED	ELECTRIC DISCRETE VALVE RUN OPEN/CLOSE	
25N52	ZSO-25.0403A	DI	PLC-25.0000	OPENED	ELECTRIC ANALOG MODULATING VALVE	
25N53	ZSO-25.0903A	DI	PLC-25.0000	OPENED	RO PERMEATE TO FLUSH TANK ISOLATION VALE	
25N53	ZSO-25.0903E	DI	PLC-25.0000	OPENED	ELECTRIC ANALOG MODULATING VALVE	
25N60	ZSO-26.0301A	DI	PLC-25.0000	OPENED	BLEND WATER FLOW CONTROL VALVE	
25N60	ZSO-26.0301B	DI	PLC-25.0000	OPENED	BLEND WATER FLOW CONTROL VALVE	

PLC I/O Listing for PLC-25.0000

Drawing	Tag	I/O	Location	Description	Service	(E/F)
25N60	ZSO-66.0801D	DI	PLC-25.0000	OPENED	SULFURIC ACID ISOLATION VALVE	
25N53	ZSO-71.5002	DI	PLC-25.0000	OPENED	POTABLE WATER FROM GAC FILTER ISOLATION VALVE	
PLC-25.0000 Total DI Points = 164						

PLC I/O Listing for PLC-25.0000

Drawing	Tag	I/O	Location	Description	Service	(E/F)
25N53	MS-25.0011	DO	PLC-25.0000	RUN	CIP MOTOR	
25N51	MS-25.0101	DO	PLC-25.0000	RUN	RO FEED PUMP NO.1	
25N51	MS-25.0104	DO	PLC-25.0000	RUN	RO BOOSTER PUMP NO.1	
25N51	MS-25.0201	DO	PLC-25.0000	RUN	RO FEED PUMP NO.2	
25N51	MS-25.0204	DO	PLC-25.0000	RUN	RO BOOSTER PUMP NO.2	
25N52	MS-25.0301	DO	PLC-25.0000	RUN	RO FEED PUMP NO.3	
25N52	MS-25.0401	DO	PLC-25.0000	RUN	RO FEED PUMP NO.4	
25N52	MS-25.0404	DO	PLC-25.0000	RUN	RO BOOSTER PUMP NO.4	
25N53	MS-25.0903	DO	PLC-25.0000	RUN	FLUSH MOTOR	
25N90	MS-79.3105	DO	PLC-25.0000	RUN	EXHAUST FAN EF-101	
25N90	MS-79.3106	DO	PLC-25.0000	RUN	SUPPLY FAN SF-101	
25N90	MS-79.3107	DO	PLC-25.0000	RUN	EXHAUST FAN EF-102	
25N90	MS-79.3108	DO	PLC-25.0000	RUN	SUPPLY FAN SF-102	
25N90	MS-79.3109	DO	PLC-25.0000	RUN	EXHAUST FAN EF-103	
25N90	MS-79.3110	DO	PLC-25.0000	RUN	EXHAUST FAN EF-104	
25N54	XA1-25.0000	DO	PLC-25.0000	STROBE	PCM CABINET	
25N54	XA2-25.0000	DO	PLC-25.0000	HORN	PCM CABINET	
25N90	XS2-79.3101	DO	PLC-25.0000	SMOKE	SMOKE DETECTOR	
25N90	XS2-79.3106	DO	PLC-25.0000	SMOKE	SMOKE DETECTOR	
25N90	XS2-79.3108	DO	PLC-25.0000	SMOKE	SMOKE DETECTOR	
21N10	ZCC-21.0601A	DO	PLC-25.0000	CLOSE	RAW WATER TO WTP ISOLATION VALVE	
21N10	ZCC-21.0601B	DO	PLC-25.0000	CLOSE	RAW WATER TO WTP ISOLATION VALVE	
21N10	ZCC-21.0602E	DO	PLC-25.0000	CLOSE	ELECTRIC DISCRETE VALVE RUN OPEN/CLOSE	
21N10	ZCC-21.0602F	DO	PLC-25.0000	CLOSE	ELECTRIC DISCRETE VALVE RUN OPEN/CLOSE	
25N59	ZCC-25.0001F	DO	PLC-25.0000	CLOSE	BRINE LINE ISOLATION VALVE AT WTP	
25N53	ZCC-25.0007E	DO	PLC-25.0000	CLOSE	RO PERMEATE ISOLATION VALVE	
25N53	ZCC-25.0008F	DO	PLC-25.0000	CLOSE	RO PERMEATE ISOLATION VALVE	

PLC I/O Listing for PLC-25.0000

Drawing	Tag	I/O	Location	Description	Service	(E/F)
25N53	ZCC-25.0012	DO	PLC-25.0000	CLOSE	ELECTRIC ANALOG MODULATING VALVE	
25N51	ZCC-25.0101A	DO	PLC-25.0000	CLOSE	ELECTRIC DISCRETE VALVE RUN OPEN/CLOSE	
25N51	ZCC-25.0101B	DO	PLC-25.0000	CLOSE	ELECTRIC DISCRETE VALVE RUN OPEN/CLOSE	
25N51	ZCC-25.0103A	DO	PLC-25.0000	CLOSE	ELECTRIC ANALOG MODULATING VALVE	
25N51	ZCC-25.0201A	DO	PLC-25.0000	CLOSE	ELECTRIC DISCRETE VALVE RUN OPEN/CLOSE	
25N51	ZCC-25.0201B	DO	PLC-25.0000	CLOSE	ELECTRIC DISCRETE VALVE RUN OPEN/CLOSE	
25N51	ZCC-25.0203A	DO	PLC-25.0000	CLOSE	ELECTRIC ANALOG MODULATING VALVE	
25N52	ZCC-25.0301A	DO	PLC-25.0000	CLOSE	ELECTRIC DISCRETE VALVE RUN OPEN/CLOSE	
25N52	ZCC-25.0301B	DO	PLC-25.0000	CLOSE	ELECTRIC DISCRETE VALVE RUN OPEN/CLOSE	
25N52	ZCC-25.0303A	DO	PLC-25.0000	CLOSE	ELECTRIC ANALOG MODULATING VALVE	
25N52	ZCC-25.0401A	DO	PLC-25.0000	CLOSE	ELECTRIC DISCRETE VALVE RUN OPEN/CLOSE	
25N52	ZCC-25.0401B	DO	PLC-25.0000	CLOSE	ELECTRIC DISCRETE VALVE RUN OPEN/CLOSE	
25N52	ZCC-25.0403A	DO	PLC-25.0000	CLOSE	ELECTRIC ANALOG MODULATING VALVE	
25N53	ZCC-25.0903A	DO	PLC-25.0000	CLOSE	RO PERMEATE TO FLUSH TANK ISOLATION VALE	
25N60	ZCC-26.0301A	DO	PLC-25.0000	CLOSE	BLEND WATER FLOW CONTROL VALVE	
25N60	ZCC-26.0301B	DO	PLC-25.0000	CLOSE	BLEND WATER FLOW CONTROL VALVE	
25N60	ZCC-66.0801D	DO	PLC-25.0000	CLOSE	SULFURIC ACID ISOLATION VALVE	
25N53	ZCC-71.5002	DO	PLC-25.0000	CLOSE	POTABLE WATER FROM GAC FILTER ISOLATION VALVE	
21N10	ZCO-21.0601A	DO	PLC-25.0000	OPEN	RAW WATER TO WTP ISOLATION VALVE	
21N10	ZCO-21.0601B	DO	PLC-25.0000	OPEN	RAW WATER TO WTP ISOLATION VALVE	
21N10	ZCO-21.0602E	DO	PLC-25.0000	OPEN	ELECTRIC DISCRETE VALVE RUN OPEN/CLOSE	
21N10	ZCO-21.0602F	DO	PLC-25.0000	OPEN	ELECTRIC DISCRETE VALVE RUN OPEN/CLOSE	
25N59	ZCO-25.0001F	DO	PLC-25.0000	OPEN	BRINE LINE ISOLATION VALVE AT WTP	
25N53	ZCO-25.0007E	DO	PLC-25.0000	OPEN	RO PERMEATE ISOLATION VALVE	
25N53	ZCO-25.0008F	DO	PLC-25.0000	OPEN	RO PERMEATE ISOLATION VALVE	
25N51	ZCO-25.0101A	DO	PLC-25.0000	OPEN	ELECTRIC DISCRETE VALVE RUN OPEN/CLOSE	
25N51	ZCO-25.0101B	DO	PLC-25.0000	OPEN	ELECTRIC DISCRETE VALVE RUN OPEN/CLOSE	

PLC I/O Listing for PLC-25.0000

Drawing	Tag	I/O	Location	Description	Service	(E/F)
25N51	ZCO-25.0201A	DO	PLC-25.0000	OPEN	ELECTRIC DISCRETE VALVE RUN OPEN/CLOSE	
25N51	ZCO-25.0201B	DO	PLC-25.0000	OPEN	ELECTRIC DISCRETE VALVE RUN OPEN/CLOSE	
25N52	ZCO-25.0301A	DO	PLC-25.0000	OPEN	ELECTRIC DISCRETE VALVE RUN OPEN/CLOSE	
25N52	ZCO-25.0301B	DO	PLC-25.0000	OPEN	ELECTRIC DISCRETE VALVE RUN OPEN/CLOSE	
25N52	ZCO-25.0401A	DO	PLC-25.0000	OPEN	ELECTRIC DISCRETE VALVE RUN OPEN/CLOSE	
25N52	ZCO-25.0401B	DO	PLC-25.0000	OPEN	ELECTRIC DISCRETE VALVE RUN OPEN/CLOSE	
25N53	ZCO-25.0903A	DO	PLC-25.0000	OPEN	RO PERMEATE TO FLUSH TANK ISOLATION VALE	
25N60	ZCO-66.0801D	DO	PLC-25.0000	OPEN	SULFURIC ACID ISOLATION VALVE	
25N53	ZCO-71.5002	DO	PLC-25.0000	OPEN	POTABLE WATER FROM GAC FILTER ISOLATION VALVE	
PLC-25.0000 Total DO Points = 63						

PLC I/O Listing for PLC-25.0001

Drawing	Tag	I/O	Location	Description	Service	(E/F)
25N40	A-24.0004	AI	PLC-25.0001	CL	CHLORINE RESIDUAL	
25N60	A-26.0401F	AI	PLC-25.0001	COND	CONDUCTIVITY INSTRUMENT	
25N40	F-24.0102	AI	PLC-25.0001		FLOW METER	
25N40	F-24.0202	AI	PLC-25.0001		FLOW METER	
25N40	F-24.0302	AI	PLC-25.0001		FLOW METER	
25N40	F-24.0402	AI	PLC-25.0001		FLOW METER	
25N40	F-24.0502	AI	PLC-25.0001		FLOW METER	
25N40	F-24.0602	AI	PLC-25.0001		FLOW METER	
25N40	F-24.0702	AI	PLC-25.0001		FLOW METER	
25N40	F-24.0802	AI	PLC-25.0001		FLOW METER	
25N50	F-25.0001A	AI	PLC-25.0001		FLOW METER	
25N50	F-25.0002A	AI	PLC-25.0001		FLOW METER	
25N50	F-25.0003A	AI	PLC-25.0001		FLOW METER	
25N50	L-25.0001	AI	PLC-25.0001		ULTRASONIC LEVEL TRANSMITTER	
25N50	P-25.0001	AI	PLC-25.0001		PRESSURE TRANSMITTER	
25N50	P-25.0002	AI	PLC-25.0001		PRESSURE TRANSMITTER	
25N50	P-25.0003	AI	PLC-25.0001		PRESSURE TRANSMITTER	
25N40	Z-24.0102	AI	PLC-25.0001	POSITION	ELECTRIC DISCRETE MODULATING VALVE	
25N40	Z-24.0102A	AI	PLC-25.0001	POSITION	ELECTRIC DISCRETE MODULATING VALVE	
25N40	Z-24.0104A	AI	PLC-25.0001	POSITION	ELECTRIC DISCRETE MODULATING VALVE	
25N40	Z-24.0104B	AI	PLC-25.0001	POSITION	ELECTRIC DISCRETE MODULATING VALVE	
25N40	Z-24.0202A	AI	PLC-25.0001	POSITION	ELECTRIC DISCRETE MODULATING VALVE	
25N40	Z-24.0202B	AI	PLC-25.0001	POSITION	ELECTRIC DISCRETE MODULATING VALVE	
25N40	Z-24.0204A	AI	PLC-25.0001	POSITION	ELECTRIC DISCRETE MODULATING VALVE	
25N40	Z-24.0204B	AI	PLC-25.0001	POSITION	ELECTRIC DISCRETE MODULATING VALVE	
25N40	Z-24.0302	AI	PLC-25.0001	POSITION	ELECTRIC DISCRETE MODULATING VALVE	
25N40	Z-24.0302A	AI	PLC-25.0001	POSITION	ELECTRIC DISCRETE MODULATING VALVE	

PLC I/O Listing for PLC-25.0001

Drawing	Tag	I/O	Location	Description	Service	(E/F)
25N40	Z-24.0304A	AI	PLC-25.0001	POSITION	ELECTRIC DISCRETE MODULATING VALVE	
25N40	Z-24.0304B	AI	PLC-25.0001	POSITION	ELECTRIC DISCRETE MODULATING VALVE	
25N40	Z-24.0402A	AI	PLC-25.0001	POSITION	ELECTRIC DISCRETE MODULATING VALVE	
25N40	Z-24.0402B	AI	PLC-25.0001	POSITION	ELECTRIC DISCRETE MODULATING VALVE	
25N40	Z-24.0404A	AI	PLC-25.0001	POSITION	ELECTRIC DISCRETE MODULATING VALVE	
25N40	Z-24.0404B	AI	PLC-25.0001	POSITION	ELECTRIC DISCRETE MODULATING VALVE	
25N40	Z-24.0502	AI	PLC-25.0001	POSITION	ELECTRIC DISCRETE MODULATING VALVE	
25N40	Z-24.0502A	AI	PLC-25.0001	POSITION	ELECTRIC DISCRETE MODULATING VALVE	
25N40	Z-24.0504A	AI	PLC-25.0001	POSITION	ELECTRIC DISCRETE MODULATING VALVE	
25N40	Z-24.0504B	AI	PLC-25.0001	POSITION	ELECTRIC DISCRETE MODULATING VALVE	
25N40	Z-24.0602	AI	PLC-25.0001	POSITION	ELECTRIC DISCRETE MODULATING VALVE	
25N40	Z-24.0602A	AI	PLC-25.0001	POSITION	ELECTRIC DISCRETE MODULATING VALVE	
25N40	Z-24.0604A	AI	PLC-25.0001	POSITION	ELECTRIC DISCRETE MODULATING VALVE	
25N40	Z-24.0604B	AI	PLC-25.0001	POSITION	ELECTRIC DISCRETE MODULATING VALVE	
25N40	Z-24.0702	AI	PLC-25.0001	POSITION	ELECTRIC DISCRETE MODULATING VALVE	
25N40	Z-24.0702A	AI	PLC-25.0001	POSITION	ELECTRIC DISCRETE MODULATING VALVE	
25N40	Z-24.0704A	AI	PLC-25.0001	POSITION	ELECTRIC DISCRETE MODULATING VALVE	
25N40	Z-24.0704B	AI	PLC-25.0001	POSITION	ELECTRIC DISCRETE MODULATING VALVE	
25N40	Z-24.0802	AI	PLC-25.0001	POSITION	ELECTRIC DISCRETE MODULATING VALVE	
25N40	Z-24.0802A	AI	PLC-25.0001	POSITION	ELECTRIC DISCRETE MODULATING VALVE	
25N40	Z-24.0804A	AI	PLC-25.0001	POSITION	ELECTRIC DISCRETE MODULATING VALVE	
25N40	Z-24.0804B	AI	PLC-25.0001	POSITION	ELECTRIC DISCRETE MODULATING VALVE	
PLC-25.0001 Total AI Points = 49						

PLC I/O Listing for PLC-25.0001

Drawing	Tag	I/O	Location	Description	Service	(E/F)
25N40	HSAR-24.0102	DI	PLC-25.0001	REMOTE	ELECTRIC DISCRETE MODULATING VALVE	
25N40	HSAR-24.0102A	DI	PLC-25.0001	REMOTE	ELECTRIC DISCRETE MODULATING VALVE	
25N40	HSAR-24.0104A	DI	PLC-25.0001	REMOTE	ELECTRIC DISCRETE MODULATING VALVE	
25N40	HSAR-24.0104B	DI	PLC-25.0001	REMOTE	ELECTRIC DISCRETE MODULATING VALVE	
25N40	HSAR-24.0202A	DI	PLC-25.0001	REMOTE	ELECTRIC DISCRETE MODULATING VALVE	
25N40	HSAR-24.0202B	DI	PLC-25.0001	REMOTE	ELECTRIC DISCRETE MODULATING VALVE	
25N40	HSAR-24.0204A	DI	PLC-25.0001	REMOTE	ELECTRIC DISCRETE MODULATING VALVE	
25N40	HSAR-24.0204B	DI	PLC-25.0001	REMOTE	ELECTRIC DISCRETE MODULATING VALVE	
25N40	HSAR-24.0302	DI	PLC-25.0001	REMOTE	ELECTRIC DISCRETE MODULATING VALVE	
25N40	HSAR-24.0302A	DI	PLC-25.0001	REMOTE	ELECTRIC DISCRETE MODULATING VALVE	
25N40	HSAR-24.0304A	DI	PLC-25.0001	REMOTE	ELECTRIC DISCRETE MODULATING VALVE	
25N40	HSAR-24.0304B	DI	PLC-25.0001	REMOTE	ELECTRIC DISCRETE MODULATING VALVE	
25N40	HSAR-24.0402A	DI	PLC-25.0001	REMOTE	ELECTRIC DISCRETE MODULATING VALVE	
25N40	HSAR-24.0402B	DI	PLC-25.0001	REMOTE	ELECTRIC DISCRETE MODULATING VALVE	
25N40	HSAR-24.0404A	DI	PLC-25.0001	REMOTE	ELECTRIC DISCRETE MODULATING VALVE	
25N40	HSAR-24.0404B	DI	PLC-25.0001	REMOTE	ELECTRIC DISCRETE MODULATING VALVE	
25N40	HSAR-24.0502	DI	PLC-25.0001	REMOTE	ELECTRIC DISCRETE MODULATING VALVE	
25N40	HSAR-24.0502A	DI	PLC-25.0001	REMOTE	ELECTRIC DISCRETE MODULATING VALVE	
25N40	HSAR-24.0504A	DI	PLC-25.0001	REMOTE	ELECTRIC DISCRETE MODULATING VALVE	
25N40	HSAR-24.0504B	DI	PLC-25.0001	REMOTE	ELECTRIC DISCRETE MODULATING VALVE	
25N40	HSAR-24.0602	DI	PLC-25.0001	REMOTE	ELECTRIC DISCRETE MODULATING VALVE	
25N40	HSAR-24.0602A	DI	PLC-25.0001	REMOTE	ELECTRIC DISCRETE MODULATING VALVE	
25N40	HSAR-24.0604A	DI	PLC-25.0001	REMOTE	ELECTRIC DISCRETE MODULATING VALVE	
25N40	HSAR-24.0604B	DI	PLC-25.0001	REMOTE	ELECTRIC DISCRETE MODULATING VALVE	
25N40	HSAR-24.0702	DI	PLC-25.0001	REMOTE	ELECTRIC DISCRETE MODULATING VALVE	
25N40	HSAR-24.0702A	DI	PLC-25.0001	REMOTE	ELECTRIC DISCRETE MODULATING VALVE	
25N40	HSAR-24.0704A	DI	PLC-25.0001	REMOTE	ELECTRIC DISCRETE MODULATING VALVE	

PLC I/O Listing for PLC-25.0001

Drawing	Tag	I/O	Location	Description	Service	(E/F)
25N40	HSAR-24.0704B	DI	PLC-25.0001	REMOTE	ELECTRIC DISCRETE MODULATING VALVE	
25N40	HSAR-24.0802	DI	PLC-25.0001	REMOTE	ELECTRIC DISCRETE MODULATING VALVE	
25N40	HSAR-24.0802A	DI	PLC-25.0001	REMOTE	ELECTRIC DISCRETE MODULATING VALVE	
25N40	HSAR-24.0804A	DI	PLC-25.0001	REMOTE	ELECTRIC DISCRETE MODULATING VALVE	
25N40	HSAR-24.0804B	DI	PLC-25.0001	REMOTE	ELECTRIC DISCRETE MODULATING VALVE	
25N50	HSAR-25.0004A	DI	PLC-25.0001	REMOTE	FILTERED WATER PUMP GATE 2	
25N50	HSAR-25.0004B	DI	PLC-25.0001	REMOTE	FILTERED WATER PUMP GATE 1	
25N50	HSAR-25.0004C	DI	PLC-25.0001	REMOTE	FILTERED WATER PUMP GATE 3	
25N50	HSAR-25.0004D	DI	PLC-25.0001	REMOTE	FILTERED WATER PUMP GATE 4	
25N50	HSAR-25.0004E	DI	PLC-25.0001	REMOTE	FILTERED WATER PUMP GATE 4	
25N50	HSAR-25.0004F	DI	PLC-25.0001	REMOTE	FILTERED WATER PUMP GATE 3	
25N54	JS1-25.0001	DI	PLC-25.0001	24V PWR SUP FAIL	PCM CABINET	
25N54	JS2-25.0001	DI	PLC-25.0001	24V PWR SUP FAIL	PCM CABINET	
25N54	JS3-25.0001	DI	PLC-25.0001	DIODE BRIDGE FAIL	PCM CABINET	
25N54	TSH-25.0001A	DI	PLC-25.0001	PLC TEMP	PCM CABINET	
25N54	XA5-25.0001	DI	PLC-25.0001	ES1 FAIL	UPS POWER STATUS	
25N54	ZS-25.0001	DI	PLC-25.0001	INTRUSION	PCM CABINET	
25N40	ZSC-24.0102	DI	PLC-25.0001	CLOSED	ELECTRIC DISCRETE MODULATING VALVE	
25N40	ZSC-24.0102A	DI	PLC-25.0001	CLOSED	ELECTRIC DISCRETE MODULATING VALVE	
25N40	ZSC-24.0104A	DI	PLC-25.0001	CLOSED	ELECTRIC DISCRETE MODULATING VALVE	
25N40	ZSC-24.0104B	DI	PLC-25.0001	CLOSED	ELECTRIC DISCRETE MODULATING VALVE	
25N40	ZSC-24.0202A	DI	PLC-25.0001	CLOSED	ELECTRIC DISCRETE MODULATING VALVE	
25N40	ZSC-24.0202B	DI	PLC-25.0001	CLOSED	ELECTRIC DISCRETE MODULATING VALVE	
25N40	ZSC-24.0204A	DI	PLC-25.0001	CLOSED	ELECTRIC DISCRETE MODULATING VALVE	
25N40	ZSC-24.0204B	DI	PLC-25.0001	CLOSED	ELECTRIC DISCRETE MODULATING VALVE	
25N40	ZSC-24.0302	DI	PLC-25.0001	CLOSED	ELECTRIC DISCRETE MODULATING VALVE	
25N40	ZSC-24.0302A	DI	PLC-25.0001	CLOSED	ELECTRIC DISCRETE MODULATING VALVE	

PLC I/O Listing for PLC-25.0001

Drawing	Tag	I/O	Location	Description	Service	(E/F)
25N40	ZSC-24.0304A	DI	PLC-25.0001	CLOSED	ELECTRIC DISCRETE MODULATING VALVE	
25N40	ZSC-24.0304B	DI	PLC-25.0001	CLOSED	ELECTRIC DISCRETE MODULATING VALVE	
25N40	ZSC-24.0402A	DI	PLC-25.0001	CLOSED	ELECTRIC DISCRETE MODULATING VALVE	
25N40	ZSC-24.0402B	DI	PLC-25.0001	CLOSED	ELECTRIC DISCRETE MODULATING VALVE	
25N40	ZSC-24.0404A	DI	PLC-25.0001	CLOSED	ELECTRIC DISCRETE MODULATING VALVE	
25N40	ZSC-24.0404B	DI	PLC-25.0001	CLOSED	ELECTRIC DISCRETE MODULATING VALVE	
25N40	ZSC-24.0502	DI	PLC-25.0001	CLOSED	ELECTRIC DISCRETE MODULATING VALVE	
25N40	ZSC-24.0502A	DI	PLC-25.0001	CLOSED	ELECTRIC DISCRETE MODULATING VALVE	
25N40	ZSC-24.0504A	DI	PLC-25.0001	CLOSED	ELECTRIC DISCRETE MODULATING VALVE	
25N40	ZSC-24.0504B	DI	PLC-25.0001	CLOSED	ELECTRIC DISCRETE MODULATING VALVE	
25N40	ZSC-24.0602	DI	PLC-25.0001	CLOSED	ELECTRIC DISCRETE MODULATING VALVE	
25N40	ZSC-24.0602A	DI	PLC-25.0001	CLOSED	ELECTRIC DISCRETE MODULATING VALVE	
25N40	ZSC-24.0604A	DI	PLC-25.0001	CLOSED	ELECTRIC DISCRETE MODULATING VALVE	
25N40	ZSC-24.0604B	DI	PLC-25.0001	CLOSED	ELECTRIC DISCRETE MODULATING VALVE	
25N40	ZSC-24.0702	DI	PLC-25.0001	CLOSED	ELECTRIC DISCRETE MODULATING VALVE	
25N40	ZSC-24.0702A	DI	PLC-25.0001	CLOSED	ELECTRIC DISCRETE MODULATING VALVE	
25N40	ZSC-24.0704A	DI	PLC-25.0001	CLOSED	ELECTRIC DISCRETE MODULATING VALVE	
25N40	ZSC-24.0704B	DI	PLC-25.0001	CLOSED	ELECTRIC DISCRETE MODULATING VALVE	
25N40	ZSC-24.0802	DI	PLC-25.0001	CLOSED	ELECTRIC DISCRETE MODULATING VALVE	
25N40	ZSC-24.0802A	DI	PLC-25.0001	CLOSED	ELECTRIC DISCRETE MODULATING VALVE	
25N40	ZSC-24.0804A	DI	PLC-25.0001	CLOSED	ELECTRIC DISCRETE MODULATING VALVE	
25N40	ZSC-24.0804B	DI	PLC-25.0001	CLOSED	ELECTRIC DISCRETE MODULATING VALVE	
25N50	ZSC-25.0004A	DI	PLC-25.0001	CLOSED	FILTERED WATER PUMP GATE 2	
25N50	ZSC-25.0004B	DI	PLC-25.0001	CLOSED	FILTERED WATER PUMP GATE 1	
25N50	ZSC-25.0004C	DI	PLC-25.0001	CLOSED	FILTERED WATER PUMP GATE 3	
25N50	ZSC-25.0004D	DI	PLC-25.0001	CLOSED	FILTERED WATER PUMP GATE 4	
25N50	ZSC-25.0004E	DI	PLC-25.0001	CLOSED	FILTERED WATER PUMP GATE 4	

PLC I/O Listing for PLC-25.0001

Drawing	Tag	I/O	Location	Description	Service	(E/F)
25N50	ZSC-25.0004F	DI	PLC-25.0001	CLOSED	FILTERED WATER PUMP GATE 3	
25N40	ZSO-24.0102	DI	PLC-25.0001	OPENED	ELECTRIC DISCRETE MODULATING VALVE	
25N40	ZSO-24.0102A	DI	PLC-25.0001	OPENED	ELECTRIC DISCRETE MODULATING VALVE	
25N40	ZSO-24.0104A	DI	PLC-25.0001	OPENED	ELECTRIC DISCRETE MODULATING VALVE	
25N40	ZSO-24.0104B	DI	PLC-25.0001	OPENED	ELECTRIC DISCRETE MODULATING VALVE	
25N40	ZSO-24.0202A	DI	PLC-25.0001	OPENED	ELECTRIC DISCRETE MODULATING VALVE	
25N40	ZSO-24.0202B	DI	PLC-25.0001	OPENED	ELECTRIC DISCRETE MODULATING VALVE	
25N40	ZSO-24.0204A	DI	PLC-25.0001	OPENED	ELECTRIC DISCRETE MODULATING VALVE	
25N40	ZSO-24.0204B	DI	PLC-25.0001	OPENED	ELECTRIC DISCRETE MODULATING VALVE	
25N40	ZSO-24.0302	DI	PLC-25.0001	OPENED	ELECTRIC DISCRETE MODULATING VALVE	
25N40	ZSO-24.0302A	DI	PLC-25.0001	OPENED	ELECTRIC DISCRETE MODULATING VALVE	
25N40	ZSO-24.0304A	DI	PLC-25.0001	OPENED	ELECTRIC DISCRETE MODULATING VALVE	
25N40	ZSO-24.0304B	DI	PLC-25.0001	OPENED	ELECTRIC DISCRETE MODULATING VALVE	
25N40	ZSO-24.0402A	DI	PLC-25.0001	OPENED	ELECTRIC DISCRETE MODULATING VALVE	
25N40	ZSO-24.0402B	DI	PLC-25.0001	OPENED	ELECTRIC DISCRETE MODULATING VALVE	
25N40	ZSO-24.0404A	DI	PLC-25.0001	OPENED	ELECTRIC DISCRETE MODULATING VALVE	
25N40	ZSO-24.0404B	DI	PLC-25.0001	OPENED	ELECTRIC DISCRETE MODULATING VALVE	
25N40	ZSO-24.0502	DI	PLC-25.0001	OPENED	ELECTRIC DISCRETE MODULATING VALVE	
25N40	ZSO-24.0502A	DI	PLC-25.0001	OPENED	ELECTRIC DISCRETE MODULATING VALVE	
25N40	ZSO-24.0504A	DI	PLC-25.0001	OPENED	ELECTRIC DISCRETE MODULATING VALVE	
25N40	ZSO-24.0504B	DI	PLC-25.0001	OPENED	ELECTRIC DISCRETE MODULATING VALVE	
25N40	ZSO-24.0602	DI	PLC-25.0001	OPENED	ELECTRIC DISCRETE MODULATING VALVE	
25N40	ZSO-24.0602A	DI	PLC-25.0001	OPENED	ELECTRIC DISCRETE MODULATING VALVE	
25N40	ZSO-24.0604A	DI	PLC-25.0001	OPENED	ELECTRIC DISCRETE MODULATING VALVE	
25N40	ZSO-24.0604B	DI	PLC-25.0001	OPENED	ELECTRIC DISCRETE MODULATING VALVE	
25N40	ZSO-24.0702	DI	PLC-25.0001	OPENED	ELECTRIC DISCRETE MODULATING VALVE	
25N40	ZSO-24.0702A	DI	PLC-25.0001	OPENED	ELECTRIC DISCRETE MODULATING VALVE	

PLC I/O Listing for PLC-25.0001

Drawing	Tag	I/O	Location	Description	Service	(E/F)
25N40	ZSO-24.0704A	DI	PLC-25.0001	OPENED	ELECTRIC DISCRETE MODULATING VALVE	
25N40	ZSO-24.0704B	DI	PLC-25.0001	OPENED	ELECTRIC DISCRETE MODULATING VALVE	
25N40	ZSO-24.0802	DI	PLC-25.0001	OPENED	ELECTRIC DISCRETE MODULATING VALVE	
25N40	ZSO-24.0802A	DI	PLC-25.0001	OPENED	ELECTRIC DISCRETE MODULATING VALVE	
25N40	ZSO-24.0804A	DI	PLC-25.0001	OPENED	ELECTRIC DISCRETE MODULATING VALVE	
25N40	ZSO-24.0804B	DI	PLC-25.0001	OPENED	ELECTRIC DISCRETE MODULATING VALVE	
25N50	ZSO-25.0004A	DI	PLC-25.0001	OPENED	FILTERED WATER PUMP GATE 2	
25N50	ZSO-25.0004B	DI	PLC-25.0001	OPENED	FILTERED WATER PUMP GATE 1	
25N50	ZSO-25.0004C	DI	PLC-25.0001	OPENED	FILTERED WATER PUMP GATE 3	
25N50	ZSO-25.0004D	DI	PLC-25.0001	OPENED	FILTERED WATER PUMP GATE 4	
25N50	ZSO-25.0004E	DI	PLC-25.0001	OPENED	FILTERED WATER PUMP GATE 4	
25N50	ZSO-25.0004F	DI	PLC-25.0001	OPENED	FILTERED WATER PUMP GATE 3	
PLC-25.0001 Total DI Points = 120						

PLC I/O Listing for PLC-25.0001

Drawing	Tag	I/O	Location	Description	Service	(E/F)
25N54	XA1-25.0001	DO	PLC-25.0001	STROBE	PCM CABINET	
25N54	XA2-25.0001	DO	PLC-25.0001	HORN	PCM CABINET	
25N40	XS-24.0001	DO	PLC-25.0001	RO PLANT IN SERVICE	SILT DENSITY ANALYZER	
25N40	XS-24.0002	DO	PLC-25.0001	RO PLANT IN SERVICE	SILT DENSITY ANALYZER	
25N40	XS-24.0003	DO	PLC-25.0001	RO PLANT IN SERVICE	SILT DENSITY ANALYZER	
25N40	ZCC-24.0102	DO	PLC-25.0001	JOG CLOSE	ELECTRIC DISCRETE MODULATING VALVE	
25N40	ZCC-24.0102A	DO	PLC-25.0001	JOG CLOSE	ELECTRIC DISCRETE MODULATING VALVE	
25N40	ZCC-24.0104A	DO	PLC-25.0001	JOG CLOSE	ELECTRIC DISCRETE MODULATING VALVE	
25N40	ZCC-24.0104B	DO	PLC-25.0001	JOG CLOSE	ELECTRIC DISCRETE MODULATING VALVE	
25N40	ZCC-24.0202A	DO	PLC-25.0001	JOG CLOSE	ELECTRIC DISCRETE MODULATING VALVE	
25N40	ZCC-24.0202B	DO	PLC-25.0001	JOG CLOSE	ELECTRIC DISCRETE MODULATING VALVE	
25N40	ZCC-24.0204A	DO	PLC-25.0001	JOG CLOSE	ELECTRIC DISCRETE MODULATING VALVE	
25N40	ZCC-24.0204B	DO	PLC-25.0001	JOG CLOSE	ELECTRIC DISCRETE MODULATING VALVE	
25N40	ZCC-24.0302	DO	PLC-25.0001	JOG CLOSE	ELECTRIC DISCRETE MODULATING VALVE	
25N40	ZCC-24.0302A	DO	PLC-25.0001	JOG CLOSE	ELECTRIC DISCRETE MODULATING VALVE	
25N40	ZCC-24.0304A	DO	PLC-25.0001	JOG CLOSE	ELECTRIC DISCRETE MODULATING VALVE	
25N40	ZCC-24.0304B	DO	PLC-25.0001	JOG CLOSE	ELECTRIC DISCRETE MODULATING VALVE	
25N40	ZCC-24.0402A	DO	PLC-25.0001	JOG CLOSE	ELECTRIC DISCRETE MODULATING VALVE	
25N40	ZCC-24.0402B	DO	PLC-25.0001	JOG CLOSE	ELECTRIC DISCRETE MODULATING VALVE	
25N40	ZCC-24.0404A	DO	PLC-25.0001	JOG CLOSE	ELECTRIC DISCRETE MODULATING VALVE	
25N40	ZCC-24.0404B	DO	PLC-25.0001	JOG CLOSE	ELECTRIC DISCRETE MODULATING VALVE	
25N40	ZCC-24.0502	DO	PLC-25.0001	JOG CLOSE	ELECTRIC DISCRETE MODULATING VALVE	
25N40	ZCC-24.0502A	DO	PLC-25.0001	JOG CLOSE	ELECTRIC DISCRETE MODULATING VALVE	
25N40	ZCC-24.0504A	DO	PLC-25.0001	JOG CLOSE	ELECTRIC DISCRETE MODULATING VALVE	
25N40	ZCC-24.0504B	DO	PLC-25.0001	JOG CLOSE	ELECTRIC DISCRETE MODULATING VALVE	
25N40	ZCC-24.0602	DO	PLC-25.0001	JOG CLOSE	ELECTRIC DISCRETE MODULATING VALVE	
25N40	ZCC-24.0602A	DO	PLC-25.0001	JOG CLOSE	ELECTRIC DISCRETE MODULATING VALVE	

PLC I/O Listing for PLC-25.0001

Drawing	Tag	I/O	Location	Description	Service	(E/F)
25N40	ZCC-24.0604A	DO	PLC-25.0001	JOG CLOSE	ELECTRIC DISCRETE MODULATING VALVE	
25N40	ZCC-24.0604B	DO	PLC-25.0001	JOG CLOSE	ELECTRIC DISCRETE MODULATING VALVE	
25N40	ZCC-24.0702	DO	PLC-25.0001	JOG CLOSE	ELECTRIC DISCRETE MODULATING VALVE	
25N40	ZCC-24.0702A	DO	PLC-25.0001	JOG CLOSE	ELECTRIC DISCRETE MODULATING VALVE	
25N40	ZCC-24.0704A	DO	PLC-25.0001	JOG CLOSE	ELECTRIC DISCRETE MODULATING VALVE	
25N40	ZCC-24.0704B	DO	PLC-25.0001	JOG CLOSE	ELECTRIC DISCRETE MODULATING VALVE	
25N40	ZCC-24.0802	DO	PLC-25.0001	JOG CLOSE	ELECTRIC DISCRETE MODULATING VALVE	
25N40	ZCC-24.0802A	DO	PLC-25.0001	JOG CLOSE	ELECTRIC DISCRETE MODULATING VALVE	
25N40	ZCC-24.0804A	DO	PLC-25.0001	JOG CLOSE	ELECTRIC DISCRETE MODULATING VALVE	
25N40	ZCC-24.0804B	DO	PLC-25.0001	JOG CLOSE	ELECTRIC DISCRETE MODULATING VALVE	
25N50	ZCC-25.0004A	DO	PLC-25.0001	CLOSE	FILTERED WATER PUMP GATE 2	
25N50	ZCC-25.0004B	DO	PLC-25.0001	CLOSE	FILTERED WATER PUMP GATE 1	
25N50	ZCC-25.0004C	DO	PLC-25.0001	CLOSE	FILTERED WATER PUMP GATE 3	
25N50	ZCC-25.0004D	DO	PLC-25.0001	CLOSE	FILTERED WATER PUMP GATE 4	
25N50	ZCC-25.0004E	DO	PLC-25.0001	CLOSE	FILTERED WATER PUMP GATE 4	
25N50	ZCC-25.0004F	DO	PLC-25.0001	CLOSE	FILTERED WATER PUMP GATE 3	
25N40	ZCO-24.0102	DO	PLC-25.0001	JOG OPEN	ELECTRIC DISCRETE MODULATING VALVE	
25N40	ZCO-24.0102A	DO	PLC-25.0001	JOG OPEN	ELECTRIC DISCRETE MODULATING VALVE	
25N40	ZCO-24.0104A	DO	PLC-25.0001	JOG OPEN	ELECTRIC DISCRETE MODULATING VALVE	
25N40	ZCO-24.0104B	DO	PLC-25.0001	JOG OPEN	ELECTRIC DISCRETE MODULATING VALVE	
25N40	ZCO-24.0202A	DO	PLC-25.0001	JOG OPEN	ELECTRIC DISCRETE MODULATING VALVE	
25N40	ZCO-24.0202B	DO	PLC-25.0001	JOG OPEN	ELECTRIC DISCRETE MODULATING VALVE	
25N40	ZCO-24.0204A	DO	PLC-25.0001	JOG OPEN	ELECTRIC DISCRETE MODULATING VALVE	
25N40	ZCO-24.0204B	DO	PLC-25.0001	JOG OPEN	ELECTRIC DISCRETE MODULATING VALVE	
25N40	ZCO-24.0302	DO	PLC-25.0001	JOG OPEN	ELECTRIC DISCRETE MODULATING VALVE	
25N40	ZCO-24.0302A	DO	PLC-25.0001	JOG OPEN	ELECTRIC DISCRETE MODULATING VALVE	
25N40	ZCO-24.0304A	DO	PLC-25.0001	JOG OPEN	ELECTRIC DISCRETE MODULATING VALVE	

PLC I/O Listing for PLC-25.0001

Drawing	Tag	I/O	Location	Description	Service	(E/F)
25N40	ZCO-24.0304B	DO	PLC-25.0001	JOG OPEN	ELECTRIC DISCRETE MODULATING VALVE	
25N40	ZCO-24.0402A	DO	PLC-25.0001	JOG OPEN	ELECTRIC DISCRETE MODULATING VALVE	
25N40	ZCO-24.0402B	DO	PLC-25.0001	JOG OPEN	ELECTRIC DISCRETE MODULATING VALVE	
25N40	ZCO-24.0404A	DO	PLC-25.0001	JOG OPEN	ELECTRIC DISCRETE MODULATING VALVE	
25N40	ZCO-24.0404B	DO	PLC-25.0001	JOG OPEN	ELECTRIC DISCRETE MODULATING VALVE	
25N40	ZCO-24.0502	DO	PLC-25.0001	JOG OPEN	ELECTRIC DISCRETE MODULATING VALVE	
25N40	ZCO-24.0502A	DO	PLC-25.0001	JOG OPEN	ELECTRIC DISCRETE MODULATING VALVE	
25N40	ZCO-24.0504A	DO	PLC-25.0001	JOG OPEN	ELECTRIC DISCRETE MODULATING VALVE	
25N40	ZCO-24.0504B	DO	PLC-25.0001	JOG OPEN	ELECTRIC DISCRETE MODULATING VALVE	
25N40	ZCO-24.0602	DO	PLC-25.0001	JOG OPEN	ELECTRIC DISCRETE MODULATING VALVE	
25N40	ZCO-24.0602A	DO	PLC-25.0001	JOG OPEN	ELECTRIC DISCRETE MODULATING VALVE	
25N40	ZCO-24.0604A	DO	PLC-25.0001	JOG OPEN	ELECTRIC DISCRETE MODULATING VALVE	
25N40	ZCO-24.0604B	DO	PLC-25.0001	JOG OPEN	ELECTRIC DISCRETE MODULATING VALVE	
25N40	ZCO-24.0702	DO	PLC-25.0001	JOG OPEN	ELECTRIC DISCRETE MODULATING VALVE	
25N40	ZCO-24.0702A	DO	PLC-25.0001	JOG OPEN	ELECTRIC DISCRETE MODULATING VALVE	
25N40	ZCO-24.0704A	DO	PLC-25.0001	JOG OPEN	ELECTRIC DISCRETE MODULATING VALVE	
25N40	ZCO-24.0704B	DO	PLC-25.0001	JOG OPEN	ELECTRIC DISCRETE MODULATING VALVE	
25N40	ZCO-24.0802	DO	PLC-25.0001	JOG OPEN	ELECTRIC DISCRETE MODULATING VALVE	
25N40	ZCO-24.0802A	DO	PLC-25.0001	JOG OPEN	ELECTRIC DISCRETE MODULATING VALVE	
25N40	ZCO-24.0804A	DO	PLC-25.0001	JOG OPEN	ELECTRIC DISCRETE MODULATING VALVE	
25N40	ZCO-24.0804B	DO	PLC-25.0001	JOG OPEN	ELECTRIC DISCRETE MODULATING VALVE	
25N50	ZCO-25.0004A	DO	PLC-25.0001	OPEN	FILTERED WATER PUMP GATE 2	
25N50	ZCO-25.0004B	DO	PLC-25.0001	OPEN	FILTERED WATER PUMP GATE 1	
25N50	ZCO-25.0004C	DO	PLC-25.0001	OPEN	FILTERED WATER PUMP GATE 3	
25N50	ZCO-25.0004D	DO	PLC-25.0001	OPEN	FILTERED WATER PUMP GATE 4	
25N50	ZCO-25.0004E	DO	PLC-25.0001	OPEN	FILTERED WATER PUMP GATE 4	
25N50	ZCO-25.0004F	DO	PLC-25.0001	OPEN	FILTERED WATER PUMP GATE 3	

PLC I/O Listing for PLC-25.0001

Drawing	Tag	I/O	Location	Description	Service	(E/F)
PLC-25.0001	Total DO Points = 81					

PLC I/O Listing for PLC-25.0904

Drawing	Tag	I/O	Location	Description	Service	(E/F)
25N59	A-25.0905A	AI	PLC-25.0904	COND	CONDUCTIVITY TRANSMITTER	
25N59	A-25.0905B	AI	PLC-25.0904	TURB	TURBIDITY	
25N59	A-25.0905C	AI	PLC-25.0904	pH	PH	
25N59	F-25.0905	AI	PLC-25.0904		FLOW METER	
25N59	P-25.0905	AI	PLC-25.0904		PRESSURE TRANSMITTER	
25N59	T-25.0905C	AI	PLC-25.0904		PH	
PLC-25.0904 Total AI Points = 6						
25N59	AUX1-25.0906A	DI	PLC-25.0904	RUNNING	OUTFALL SAMPLE PUMP NO. 1	
25N59	AUX1-25.0906B	DI	PLC-25.0904	RUNNING	OUTFALL SAMPLE PUMP NO. 2	
25N59	AUX2-25.0906A	DI	PLC-25.0904	FAILED	OUTFALL SAMPLE PUMP NO. 1	
25N59	AUX2-25.0906B	DI	PLC-25.0904	FAILED	OUTFALL SAMPLE PUMP NO. 2	
25N59	FSL-25.0906A	DI	PLC-25.0904	FLOW	THERMAL FLOW SWITCH	
25N59	FSL-25.0906B	DI	PLC-25.0904	FLOW	THERMAL FLOW SWITCH	
25N59	HSAR-25.0906A	DI	PLC-25.0904	REMOTE	OUTFALL SAMPLE PUMP NO. 1	
25N59	HSAR-25.0906B	DI	PLC-25.0904	REMOTE	OUTFALL SAMPLE PUMP NO. 2	
25N59	JS1-25.0904	DI	PLC-25.0904	24V PWR SUP FAIL	PCM CABINET	
25N59	JS2-25.0904	DI	PLC-25.0904	24V PWR SUP FAIL	PCM CABINET	
25N59	JS3-25.0904	DI	PLC-25.0904	DIODE BRIDGE FAIL	PCM CABINET	
25N59	LSH-25.0907	DI	PLC-25.0904	LEVEL	LEVEL SWITCH HIGH	
25N59	LSH-25.0908	DI	PLC-25.0904	LEVEL	LEVEL SWITCH HIGH	
25N59	TSH-25.0904	DI	PLC-25.0904	PLC TEMP	PCM CABINET	
25N59	TSH-25.0906A	DI	PLC-25.0904	TEMP	OUTFALL SAMPLE PUMP NO. 1	
25N59	TSH-25.0906B	DI	PLC-25.0904	TEMP	OUTFALL SAMPLE PUMP NO. 2	
25N59	XA5-25.0904	DI	PLC-25.0904	ES1 FAIL	UPS POWER STATUS	
25N59	ZS-25.0904	DI	PLC-25.0904	INTRUSION	PCM CABINET	
PLC-25.0904 Total DI Points = 18						

PLC I/O Listing for PLC-25.0904

Drawing	Tag	I/O	Location	Description	Service	(E/F)
25N59	MS-25.0906A	DO	PLC-25.0904	RUN	OUTFALL SAMPLE PUMP NO. 1	
25N59	MS-25.0906B	DO	PLC-25.0904	RUN	OUTFALL SAMPLE PUMP NO. 2	
25N59	XA1-25.0904	DO	PLC-25.0904	STROBE	PCM CABINET	
25N59	XA2-25.0904	DO	PLC-25.0904	HORN	PCM CABINET	
PLC-25.0904 Total DO Points = 4						

PLC I/O Listing for PLC-60.0000

Drawing	Tag	I/O	Location	Description	Service	(E/F)
25N60	L-66.0801B	AI	PLC-60.0000		H2SO4 TANK NO. 1 LEVEL INDICATING TRANSMITTER	
25N60	L-66.0806A	AI	PLC-60.0000		LEVEL INDICATING TRANSMITTER	
25N60	L-66.0901	AI	PLC-60.0000		CACL2 TANK NO. 1 LEVEL INDICATING TRANSMITTER	
25N50	W-65.0201	AI	PLC-60.0000	WEIGHT	NAHSO3 STORAGE TOTE NO. 1 WEIGHT TRANSMITTER	
25N90	W-69.0101	AI	PLC-60.0000	WEIGHT		
PLC-60.0000 Total AI Points = 5						

PLC I/O Listing for PLC-60.0000

Drawing	Tag	I/O	Location	Description	Service	(E/F)
25N50	AUX1-65.0201	DI	PLC-60.0000	RUNNING	SODIUM BISULFITE METERING PUMP NO.1	
25N50	AUX1-65.0202	DI	PLC-60.0000	RUNNING	SODIUM BISULFITE METERING PUMP NO.2	
25N60	AUX1-66.0801	DI	PLC-60.0000	RUNNING	SULFURIC ACID METERING PUMP NO.1	
25N60	AUX1-66.0802	DI	PLC-60.0000	RUNNING	SULFURIC ACID METERING PUMP NO.2	
25N60	AUX1-66.0803	DI	PLC-60.0000	RUNNING	SULFURIC ACID METERING PUMP NO.3	
25N60	AUX1-66.0804	DI	PLC-60.0000	RUNNING	SULFURIC ACID METERING PUMP NO. 4	
25N60	AUX1-66.0805	DI	PLC-60.0000	RUNNING	SULFURIC ACID METERING PUMP NO. 5	
25N60	AUX1-66.0901	DI	PLC-60.0000	RUNNING	CALCIUM CHLORIDE METERING PUMP NO.1	
25N60	AUX1-66.0902	DI	PLC-60.0000	RUNNING	CALCIUM CHLORIDE METERING PUMP NO.2	
25N90	AUX1-69.0101	DI	PLC-60.0000	RUNNING	SCALE INHIBITOR METERING PUMP NO.1	
25N90	AUX1-69.0102	DI	PLC-60.0000	RUNNING	SCALE INHIBITOR METERING PUMP NO.2	
25N50	AUX2-65.0201	DI	PLC-60.0000	FAILED	SODIUM BISULFITE METERING PUMP NO.1	
25N50	AUX2-65.0202	DI	PLC-60.0000	FAILED	SODIUM BISULFITE METERING PUMP NO.2	
25N60	AUX2-66.0801	DI	PLC-60.0000	FAILED	SULFURIC ACID METERING PUMP NO.1	
25N60	AUX2-66.0802	DI	PLC-60.0000	FAILED	SULFURIC ACID METERING PUMP NO.2	
25N60	AUX2-66.0803	DI	PLC-60.0000	FAILED	SULFURIC ACID METERING PUMP NO.3	
25N60	AUX2-66.0804	DI	PLC-60.0000	FAILED	SULFURIC ACID METERING PUMP NO. 4	
25N60	AUX2-66.0805	DI	PLC-60.0000	FAILED	SULFURIC ACID METERING PUMP NO. 5	
25N60	AUX2-66.0901	DI	PLC-60.0000	FAILED	CALCIUM CHLORIDE METERING PUMP NO.1	
25N60	AUX2-66.0902	DI	PLC-60.0000	FAILED	CALCIUM CHLORIDE METERING PUMP NO.2	
25N90	AUX2-69.0101	DI	PLC-60.0000	FAILED	SCALE INHIBITOR METERING PUMP NO.1	
25N90	AUX2-69.0102	DI	PLC-60.0000	FAILED	SCALE INHIBITOR METERING PUMP NO.2	
25N50	FSH-65.0201A	DI	PLC-60.0000		NaHSO3 SHOWER & EYEWASH FLOW SWITCH	
25N60	FSH-66.0803	DI	PLC-60.0000		H2SO4 EMERGENCY SHOWER & EYEWASH FLOW SWITCH	
25N60	FSH-66.0904	DI	PLC-60.0000		CaCl2 EMERGENCY SHOWER & EYEWASH FLOW SWITCH	
25N50	HSAR-65.0201	DI	PLC-60.0000	REMOTE	SODIUM BISULFITE METERING PUMP NO.1	
25N50	HSAR-65.0202	DI	PLC-60.0000	REMOTE	SODIUM BISULFITE METERING PUMP NO.2	

PLC I/O Listing for PLC-60.0000

Drawing	Tag	I/O	Location	Description	Service	(E/F)
25N60	HSAR-66.0801	DI	PLC-60.0000	REMOTE	SULFURIC ACID METERING PUMP NO.1	
25N60	HSAR-66.0802	DI	PLC-60.0000	REMOTE	SULFURIC ACID METERING PUMP NO.2	
25N60	HSAR-66.0803	DI	PLC-60.0000	REMOTE	SULFURIC ACID METERING PUMP NO.3	
25N60	HSAR-66.0804	DI	PLC-60.0000	REMOTE	SULFURIC ACID METERING PUMP NO. 4	
25N60	HSAR-66.0805	DI	PLC-60.0000	REMOTE	SULFURIC ACID METERING PUMP NO. 5	
25N60	HSAR-66.0901	DI	PLC-60.0000	REMOTE	CALCIUM CHLORIDE METERING PUMP NO.1	
25N60	HSAR-66.0901F	DI	PLC-60.0000	REMOTE	CALCIUM CHLORIDE ISOLATION VALVE	
25N60	HSAR-66.0902	DI	PLC-60.0000	REMOTE	CALCIUM CHLORIDE METERING PUMP NO.2	
25N90	HSAR-69.0101	DI	PLC-60.0000	REMOTE	SCALE INHIBITOR METERING PUMP NO.1	
25N90	HSAR-69.0102	DI	PLC-60.0000	REMOTE	SCALE INHIBITOR METERING PUMP NO.2	
25N00	JS1-60.0000	DI	PLC-60.0000	24V PWR SUP FAIL	PCM CABINET	
25N00	JS2-60.0000	DI	PLC-60.0000	24V PWR SUP FAIL	PCM CABINET	
25N00	JS3-60.0000	DI	PLC-60.0000	DIODE BRIDGE FAIL	PCM CABINET	
25N60	LSH-66.0801A	DI	PLC-60.0000		H2SO4 STORAGE CONTAINMENT HIGH LEVEL SWITCH	
25N60	LSH-66.0903	DI	PLC-60.0000		CACL2 STORAGE CONTAINMENT DIKE HIGH LEVEL SWITCH	
25N60	PSH-66.0805	DI	PLC-60.0000		PRESSURE SWITCH HIGH	
25N00	TSH-60.0000	DI	PLC-60.0000	PLC TEMP	PCM CABINET	
25N00	XA5-60.0000	DI	PLC-60.0000	ES1 FAIL	UPS POWER STATUS	
25N00	ZS-60.0000	DI	PLC-60.0000	INTRUSION	PCM CABINET	
25N60	ZSC-66.0901F	DI	PLC-60.0000	CLOSED	CALCIUM CHLORIDE ISOLATION VALVE	
25N60	ZSO-66.0901F	DI	PLC-60.0000	OPENED	CALCIUM CHLORIDE ISOLATION VALVE	
PLC-60.0000 Total DI Points = 48						

PLC I/O Listing for PLC-60.0000

Drawing	Tag	I/O	Location	Description	Service	(E/F)
25N50	MS-65.0201	DO	PLC-60.0000	RUN	SODIUM BISULFITE METERING PUMP NO.1	
25N50	MS-65.0202	DO	PLC-60.0000	RUN	SODIUM BISULFITE METERING PUMP NO.2	
25N60	MS-66.0801	DO	PLC-60.0000	RUN	SULFURIC ACID METERING PUMP NO.1	
25N60	MS-66.0802	DO	PLC-60.0000	RUN	SULFURIC ACID METERING PUMP NO.2	
25N60	MS-66.0803	DO	PLC-60.0000	RUN	SULFURIC ACID METERING PUMP NO.3	
25N60	MS-66.0804	DO	PLC-60.0000	RUN	SULFURIC ACID METERING PUMP NO. 4	
25N60	MS-66.0805	DO	PLC-60.0000	RUN	SULFURIC ACID METERING PUMP NO. 5	
25N60	MS-66.0901	DO	PLC-60.0000	RUN/STOP	CALCIUM CHLORIDE METERING PUMP NO.1	
25N60	MS-66.0902	DO	PLC-60.0000	RUN/STOP	CALCIUM CHLORIDE METERING PUMP NO.2	
25N90	MS-69.0101	DO	PLC-60.0000	RUN/STOP	SCALE INHIBITOR METERING PUMP NO.1	
25N90	MS-69.0102	DO	PLC-60.0000	RUN/STOP	SCALE INHIBITOR METERING PUMP NO.2	
25N00	XA1-60.0000	DO	PLC-60.0000	STROBE	PCM CABINET	
25N00	XA2-60.0000	DO	PLC-60.0000	HORN	PCM CABINET	
25N60	ZCC-66.0901F	DO	PLC-60.0000	CLOSE	CALCIUM CHLORIDE ISOLATION VALVE	
25N60	ZCO-66.0901F	DO	PLC-60.0000	OPEN	CALCIUM CHLORIDE ISOLATION VALVE	
PLC-60.0000 Total DO Points = 15						
25N60	FSH-66.0902	MB	PLC-60.0000		CaCl2 EMERGENCY SHOWER & EYEWASH FLOW SWITCH	
PLC-60.0000 Total MB Points = 1						

Engineers...Working Wonders With Water™

HMI Listing

Tag	Loop	Equipment	Function	Description	Service	Drawing #
PAH	21.0301	PE-21.0301	ALARM		PRESSURE TRANSMITTER	10024A1021N2101.DWG
PAL	21.0301	PE-21.0301	ALARM		PRESSURE TRANSMITTER	10024A1021N2101.DWG
PI	21.0301	PE-21.0301	NUM		PRESSURE TRANSMITTER	10024A1021N2101.DWG
PR	21.0301	PE-21.0301	TREND		PRESSURE TRANSMITTER	10024A1021N2101.DWG
QPH	21.0301	PE-21.0301	SP		PRESSURE TRANSMITTER	10024A1021N2101.DWG
QPL	21.0301	PE-21.0301	SP		PRESSURE TRANSMITTER	10024A1021N2101.DWG
LAH	21.0302	LE-21.0302	ALARM		ULTRASONIC LEVEL TRANSMITTER	10024A1021N2101.DWG
LAL	21.0302	LE-21.0302	ALARM		ULTRASONIC LEVEL TRANSMITTER	10024A1021N2101.DWG
LI	21.0302	LE-21.0302	NUM		ULTRASONIC LEVEL TRANSMITTER	10024A1021N2101.DWG
LR	21.0302	LE-21.0302	TREND		ULTRASONIC LEVEL TRANSMITTER	10024A1021N2101.DWG
PAH	21.0302	PE-21.0302	ALARM		PRESSURE TRANSMITTER	10024A1021N2102.DWG
PAL	21.0302	PE-21.0302	ALARM		PRESSURE TRANSMITTER	10024A1021N2102.DWG
PI	21.0302	PE-21.0302	NUM		PRESSURE TRANSMITTER	10024A1021N2102.DWG
PR	21.0302	PE-21.0302	TREND		PRESSURE TRANSMITTER	10024A1021N2102.DWG
QLH	21.0302	LE-21.0302	SP		ULTRASONIC LEVEL TRANSMITTER	10024A1021N2101.DWG
QLL	21.0302	LE-21.0302	SP		ULTRASONIC LEVEL TRANSMITTER	10024A1021N2101.DWG
QPH	21.0302	PE-21.0302	SP		PRESSURE TRANSMITTER	10024A1021N2102.DWG
QPL	21.0302	PE-21.0302	SP		PRESSURE TRANSMITTER	10024A1021N2102.DWG
PAH	21.0303	PE-21.0303	ALARM		PRESSURE TRANSMITTER	10024A1021N2103.DWG
PAL	21.0303	PE-21.0303	ALARM		PRESSURE TRANSMITTER	10024A1021N2103.DWG
PI	21.0303	PE-21.0303	NUM		PRESSURE TRANSMITTER	10024A1021N2103.DWG
PR	21.0303	PE-21.0303	TREND		PRESSURE TRANSMITTER	10024A1021N2103.DWG
QPH	21.0303	PE-21.0303	SP		PRESSURE TRANSMITTER	10024A1021N2103.DWG
QPL	21.0303	PE-21.0303	SP		PRESSURE TRANSMITTER	10024A1021N2103.DWG
FAH	21.0304	FE-21.0304	ALARM		FLOW METER	10024A1021N2103.DWG
FAL	21.0304	FE-21.0304	ALARM		FLOW METER	10024A1021N2103.DWG
FI	21.0304	FE-21.0304	NUM		FLOW METER	10024A1021N2103.DWG

HMI Listing

Tag	Loop	Equipment	Function	Description	Service	Drawing #
FQI	21.0304	FE-21.0304	NUM		FLOW METER	10024A1021N2103.DWG
FR	21.0304	FE-21.0304	TREND		FLOW METER	10024A1021N2103.DWG
QFH	21.0304	FE-21.0304	SP		FLOW METER	10024A1021N2103.DWG
QFL	21.0304	FE-21.0304	SP		FLOW METER	10024A1021N2103.DWG
LAH	21.0305	LE-21.0305	ALARM		ULTRASONIC LEVEL TRANSMITTER	10024A1021N2101.DWG
LAL	21.0305	LE-21.0305	ALARM		ULTRASONIC LEVEL TRANSMITTER	10024A1021N2101.DWG
LI	21.0305	LE-21.0305	NUM		ULTRASONIC LEVEL TRANSMITTER	10024A1021N2101.DWG
LR	21.0305	LE-21.0305	TREND		ULTRASONIC LEVEL TRANSMITTER	10024A1021N2101.DWG
QLH	21.0305	LE-21.0305	SP		ULTRASONIC LEVEL TRANSMITTER	10024A1021N2101.DWG
QLL	21.0305	LE-21.0305	SP		ULTRASONIC LEVEL TRANSMITTER	10024A1021N2101.DWG
FAH	21.0602	FE-21.0602	ALARM		FLOW METER	10024A1021N2105.DWG
FAL	21.0602	FE-21.0602	ALARM		FLOW METER	10024A1021N2105.DWG
FI	21.0602	FE-21.0602	NUM		FLOW METER	10024A1021N2105.DWG
FR	21.0602	FE-21.0602	TREND		FLOW METER	10024A1021N2105.DWG
PAH	21.0602	PE-21.0602	ALARM		PRESSURE TRANSMITTER	10024A1021N2105.DWG
PAL	21.0602	PE-21.0602	ALARM		PRESSURE TRANSMITTER	10024A1021N2105.DWG
PI	21.0602	PE-21.0602	NUM		PRESSURE TRANSMITTER	10024A1021N2105.DWG
PR	21.0602	PE-21.0602	TREND		PRESSURE TRANSMITTER	10024A1021N2105.DWG
QFH	21.0602	FE-21.0602	SP		FLOW METER	10024A1021N2105.DWG
QFL	21.0602	FE-21.0602	SP		FLOW METER	10024A1021N2105.DWG
QPH	21.0602	PE-21.0602	SP		PRESSURE TRANSMITTER	10024A1021N2105.DWG
QPL	21.0602	PE-21.0602	SP		PRESSURE TRANSMITTER	10024A1021N2105.DWG
AAH	21.0603	AE-21.0603	ALARM	pH	PH	10024A1021N2106.DWG
AAL	21.0603	AE-21.0603	ALARM	pH	PH	10024A1021N2106.DWG
AI	21.0603	AE-21.0603	NUM	pH	PH	10024A1021N2106.DWG
AR	21.0603	AE-21.0603	TREND	pH	PH	10024A1021N2106.DWG
QAH	21.0603	AE-21.0603	SP	pH	PH	10024A1021N2106.DWG

HMI Listing

Tag	Loop	Equipment	Function	Description	Service	Drawing #
QAL	21.0603	AE-21.0603	SP	pH	PH	10024A1021N2106.DWG
LAHH	21.0701	LE-21.0701	ALARM	HIGH HIGH		10024A1021N2107.DWG
LALL	21.0701	LE-21.0701	ALARM	LOW LOW		10024A1021N2107.DWG
FAH	24.0102A	FE-24.0102A	ALARM		FLOW METER	10024A1025N2406.DWG
FAL	24.0102A	FE-24.0102A	ALARM		FLOW METER	10024A1025N2406.DWG
FI	24.0102A	FE-24.0102A	NUM		FLOW METER	10024A1025N2406.DWG
FQI	24.0102A	FE-24.0102A	NUM		FLOW METER	10024A1025N2406.DWG
FR	24.0102A	FE-24.0102A	TREND		FLOW METER	10024A1025N2406.DWG
QFH	24.0102A	FE-24.0102A	SP		FLOW METER	10024A1025N2406.DWG
QFL	24.0102A	FE-24.0102A	SP		FLOW METER	10024A1025N2406.DWG
FAH	24.0102B	FE-24.0102B	ALARM		FLOW METER	10024A1025N2406.DWG
FAL	24.0102B	FE-24.0102B	ALARM		FLOW METER	10024A1025N2406.DWG
FI	24.0102B	FE-24.0102B	NUM		FLOW METER	10024A1025N2406.DWG
FQI	24.0102B	FE-24.0102B	NUM		FLOW METER	10024A1025N2406.DWG
FR	24.0102B	FE-24.0102B	TREND		FLOW METER	10024A1025N2406.DWG
QFH	24.0102B	FE-24.0102B	SP		FLOW METER	10024A1025N2406.DWG
QFL	24.0102B	FE-24.0102B	SP		FLOW METER	10024A1025N2406.DWG
FAH	24.0302A	FE-24.0302A	ALARM		FLOW METER	10024A1025N2406.DWG
FAL	24.0302A	FE-24.0302A	ALARM		FLOW METER	10024A1025N2406.DWG
FI	24.0302A	FE-24.0302A	NUM		FLOW METER	10024A1025N2406.DWG
FQI	24.0302A	FE-24.0302A	NUM		FLOW METER	10024A1025N2406.DWG
FR	24.0302A	FE-24.0302A	TREND		FLOW METER	10024A1025N2406.DWG
QFH	24.0302A	FE-24.0302A	SP		FLOW METER	10024A1025N2406.DWG
QFL	24.0302A	FE-24.0302A	SP		FLOW METER	10024A1025N2406.DWG
FAH	24.0302B	FE-24.0302B	ALARM		FLOW METER	10024A1025N2406.DWG
FAL	24.0302B	FE-24.0302B	ALARM		FLOW METER	10024A1025N2406.DWG
FI	24.0302B	FE-24.0302B	NUM		FLOW METER	10024A1025N2406.DWG

HMI Listing

Tag	Loop	Equipment	Function	Description	Service	Drawing #
FQI	24.0302B	FE-24.0302B	NUM		FLOW METER	10024A1025N2406.DWG
FR	24.0302B	FE-24.0302B	TREND		FLOW METER	10024A1025N2406.DWG
QFH	24.0302B	FE-24.0302B	SP		FLOW METER	10024A1025N2406.DWG
QFL	24.0302B	FE-24.0302B	SP		FLOW METER	10024A1025N2406.DWG
FAH	24.0502A	FE-24.0502A	ALARM		FLOW METER	10024A1025N2405.DWG
FAH	24.0502A	FE-24.0502A	ALARM		FLOW METER	10024A1025N2405.DWG
FAH	24.0502A	FE-24.0502A	ALARM		FLOW METER	10024A1025N2405.DWG
FAH	24.0502A	FE-24.0502A	ALARM		FLOW METER	10024A1025N2405.DWG
FAL	24.0502A	FE-24.0502A	ALARM		FLOW METER	10024A1025N2405.DWG
FAL	24.0502A	FE-24.0502A	ALARM		FLOW METER	10024A1025N2405.DWG
FAL	24.0502A	FE-24.0502A	ALARM		FLOW METER	10024A1025N2405.DWG
FAL	24.0502A	FE-24.0502A	ALARM		FLOW METER	10024A1025N2405.DWG
FI	24.0502A	FE-24.0502A	NUM		FLOW METER	10024A1025N2405.DWG
FI	24.0502A	FE-24.0502A	NUM		FLOW METER	10024A1025N2405.DWG
FI	24.0502A	FE-24.0502A	NUM		FLOW METER	10024A1025N2405.DWG
FI	24.0502A	FE-24.0502A	NUM		FLOW METER	10024A1025N2405.DWG
FQI	24.0502A	FE-24.0502A	NUM		FLOW METER	10024A1025N2405.DWG
FQI	24.0502A	FE-24.0502A	NUM		FLOW METER	10024A1025N2405.DWG
FQI	24.0502A	FE-24.0502A	NUM		FLOW METER	10024A1025N2405.DWG
FQI	24.0502A	FE-24.0502A	NUM		FLOW METER	10024A1025N2405.DWG
FR	24.0502A	FE-24.0502A	TREND		FLOW METER	10024A1025N2405.DWG
FR	24.0502A	FE-24.0502A	TREND		FLOW METER	10024A1025N2405.DWG
FR	24.0502A	FE-24.0502A	TREND		FLOW METER	10024A1025N2405.DWG
FR	24.0502A	FE-24.0502A	TREND		FLOW METER	10024A1025N2405.DWG
QFH	24.0502A	FE-24.0502A	SP		FLOW METER	10024A1025N2405.DWG
QFH	24.0502A	FE-24.0502A	SP		FLOW METER	10024A1025N2405.DWG
QFH	24.0502A	FE-24.0502A	SP		FLOW METER	10024A1025N2405.DWG

HMI Listing

Tag	Loop	Equipment	Function	Description	Service	Drawing #
QFH	24.0502A	FE-24.0502A	SP		FLOW METER	10024A1025N2405.DWG
QFL	24.0502A	FE-24.0502A	SP		FLOW METER	10024A1025N2405.DWG
QFL	24.0502A	FE-24.0502A	SP		FLOW METER	10024A1025N2405.DWG
QFL	24.0502A	FE-24.0502A	SP		FLOW METER	10024A1025N2405.DWG
QFL	24.0502A	FE-24.0502A	SP		FLOW METER	10024A1025N2405.DWG
FAH	24.0702A	FE-24.0702A	ALARM		FLOW METER	10024A1025N2405.DWG
FAL	24.0702A	FE-24.0702A	ALARM		FLOW METER	10024A1025N2405.DWG
FI	24.0702A	FE-24.0702A	NUM		FLOW METER	10024A1025N2405.DWG
FQI	24.0702A	FE-24.0702A	NUM		FLOW METER	10024A1025N2405.DWG
FR	24.0702A	FE-24.0702A	TREND		FLOW METER	10024A1025N2405.DWG
QFH	24.0702A	FE-24.0702A	SP		FLOW METER	10024A1025N2405.DWG
QFL	24.0702A	FE-24.0702A	SP		FLOW METER	10024A1025N2405.DWG
FAH	24.0702B	FE-24.0702B	ALARM		FLOW METER	10024A1025N2405.DWG
FAL	24.0702B	FE-24.0702B	ALARM		FLOW METER	10024A1025N2405.DWG
FI	24.0702B	FE-24.0702B	NUM		FLOW METER	10024A1025N2405.DWG
FQI	24.0702B	FE-24.0702B	NUM		FLOW METER	10024A1025N2405.DWG
FR	24.0702B	FE-24.0702B	TREND		FLOW METER	10024A1025N2405.DWG
QFH	24.0702B	FE-24.0702B	SP		FLOW METER	10024A1025N2405.DWG
QFL	24.0702B	FE-24.0702B	SP		FLOW METER	10024A1025N2405.DWG
LAH	25.0001	LE-25.0001	ALARM		ULTRASONIC LEVEL TRANSMITTER	10024A1025N2502.DWG
LAL	25.0001	LE-25.0001	ALARM		ULTRASONIC LEVEL TRANSMITTER	10024A1025N2502.DWG
LI	25.0001	LE-25.0001	NUM		ULTRASONIC LEVEL TRANSMITTER	10024A1025N2502.DWG
LR	25.0001	LE-25.0001	TREND		ULTRASONIC LEVEL TRANSMITTER	10024A1025N2502.DWG
PAH	25.0001	PE-25.0001	ALARM		PRESSURE TRANSMITTER	10024A1025N2501.DWG
PAL	25.0001	PE-25.0001	ALARM		PRESSURE TRANSMITTER	10024A1025N2501.DWG
PI	25.0001	PE-25.0001	NUM		PRESSURE TRANSMITTER	10024A1025N2501.DWG
PR	25.0001	PE-25.0001	TREND		PRESSURE TRANSMITTER	10024A1025N2501.DWG

HMI Listing

Tag	Loop	Equipment	Function	Description	Service	Drawing #
QLH	25.0001	LE-25.0001	SP		ULTRASONIC LEVEL TRANSMITTER	10024A1025N2502.DWG
QLL	25.0001	LE-25.0001	SP		ULTRASONIC LEVEL TRANSMITTER	10024A1025N2502.DWG
QPH	25.0001	PE-25.0001	SP		PRESSURE TRANSMITTER	10024A1025N2501.DWG
QPL	25.0001	PE-25.0001	SP		PRESSURE TRANSMITTER	10024A1025N2501.DWG
FAH	25.0001A	FE-25.0001A	ALARM		FLOW METER	10024A1025N2501.DWG
FAL	25.0001A	FE-25.0001A	ALARM		FLOW METER	10024A1025N2501.DWG
FI	25.0001A	FE-25.0001A	NUM		FLOW METER	10024A1025N2501.DWG
FQI	25.0001A	FE-25.0001A	NUM		FLOW METER	10024A1025N2501.DWG
FR	25.0001A	FE-25.0001A	TREND		FLOW METER	10024A1025N2501.DWG
QFH	25.0001A	FE-25.0001A	SP		FLOW METER	10024A1025N2501.DWG
QFL	25.0001A	FE-25.0001A	SP		FLOW METER	10024A1025N2501.DWG
FAH	25.0001B	FE-25.0001B	ALARM		FLOW METER	10024A1025N2591.DWG
FAL	25.0001B	FE-25.0001B	ALARM		FLOW METER	10024A1025N2591.DWG
FI	25.0001B	FE-25.0001B	NUM		FLOW METER	10024A1025N2591.DWG
FR	25.0001B	FE-25.0001B	TREND		FLOW METER	10024A1025N2591.DWG
QFH	25.0001B	FE-25.0001B	SP		FLOW METER	10024A1025N2591.DWG
QFL	25.0001B	FE-25.0001B	SP		FLOW METER	10024A1025N2591.DWG
FAH	25.0002A	FE-25.0002A	ALARM		FLOW METER	10024A1025N2502.DWG
FAL	25.0002A	FE-25.0002A	ALARM		FLOW METER	10024A1025N2502.DWG
FI	25.0002A	FE-25.0002A	NUM		FLOW METER	10024A1025N2502.DWG
FQI	25.0002A	FE-25.0002A	NUM		FLOW METER	10024A1025N2502.DWG
FR	25.0002A	FE-25.0002A	TREND		FLOW METER	10024A1025N2502.DWG
QFH	25.0002A	FE-25.0002A	SP		FLOW METER	10024A1025N2502.DWG
QFL	25.0002A	FE-25.0002A	SP		FLOW METER	10024A1025N2502.DWG
PAH	25.0003	PE-25.0003	ALARM		PRESSURE TRANSMITTER	10024A1025N2503.DWG
PAL	25.0003	PE-25.0003	ALARM		PRESSURE TRANSMITTER	10024A1025N2503.DWG
PI	25.0003	PE-25.0003	NUM		PRESSURE TRANSMITTER	10024A1025N2503.DWG

HMI Listing

Tag	Loop	Equipment	Function	Description	Service	Drawing #
PR	25.0003	PE-25.0003	TREND		PRESSURE TRANSMITTER	10024A1025N2503.DWG
QPH	25.0003	PE-25.0003	SP		PRESSURE TRANSMITTER	10024A1025N2503.DWG
QPL	25.0003	PE-25.0003	SP		PRESSURE TRANSMITTER	10024A1025N2503.DWG
FAH	25.0003A	FE-25.0003A	ALARM		FLOW METER	10024A1025N2503.DWG
FAL	25.0003A	FE-25.0003A	ALARM		FLOW METER	10024A1025N2503.DWG
FI	25.0003A	FE-25.0003A	NUM		FLOW METER	10024A1025N2503.DWG
FQI	25.0003A	FE-25.0003A	NUM		FLOW METER	10024A1025N2503.DWG
FR	25.0003A	FE-25.0003A	TREND		FLOW METER	10024A1025N2503.DWG
QFH	25.0003A	FE-25.0003A	SP		FLOW METER	10024A1025N2503.DWG
QFL	25.0003A	FE-25.0003A	SP		FLOW METER	10024A1025N2503.DWG
AAH	25.0005A	AE-25.0005A	ALARM	pH	PH	10024A1025N2507.DWG
AAL	25.0005A	AE-25.0005A	ALARM	pH	PH	10024A1025N2507.DWG
AI	25.0005A	AE-25.0005A	NUM	pH	PH	10024A1025N2507.DWG
AR	25.0005A	AE-25.0005A	TREND	pH	PH	10024A1025N2507.DWG
QAH	25.0005A	AE-25.0005A	SP	pH	PH	10024A1025N2507.DWG
QAL	25.0005A	AE-25.0005A	SP	pH	PH	10024A1025N2507.DWG
AAH	25.0005B	AE-25.0005B	ALARM	TURB	TURBIDITY	10024A1025N2507.DWG
AI	25.0005B	AE-25.0005B	NUM	TURB	TURBIDITY	10024A1025N2507.DWG
AR	25.0005B	AE-25.0005B	TREND	TURB	TURBIDITY	10024A1025N2507.DWG
QAH	25.0005B	AE-25.0005B	SP	TURB	TURBIDITY	10024A1025N2507.DWG
AAH	25.0005C	AE-25.0005C	ALARM	COND	CONDUCTIVITY INSTRUMENT	10024A1025N2507.DWG
AAL	25.0005C	AE-25.0005C	ALARM	COND	CONDUCTIVITY INSTRUMENT	10024A1025N2507.DWG
AI	25.0005C	AE-25.0005C	NUM	COND	CONDUCTIVITY INSTRUMENT	10024A1025N2507.DWG
AR	25.0005C	AE-25.0005C	TREND	COND	CONDUCTIVITY INSTRUMENT	10024A1025N2507.DWG
QAH	25.0005C	AE-25.0005C	SP	COND	CONDUCTIVITY INSTRUMENT	10024A1025N2507.DWG
QAL	25.0005C	AE-25.0005C	SP	COND	CONDUCTIVITY INSTRUMENT	10024A1025N2507.DWG
AAH	25.0005D	AE-25.0005D	ALARM	CL	CHLORINE RESIDUAL	10024A1025N2507.DWG

HMI Listing

Tag	Loop	Equipment	Function	Description	Service	Drawing #
AAL	25.0005D	AE-25.0005D	ALARM	CL	CHLORINE RESIDUAL	10024A1025N2507.DWG
AI	25.0005D	AE-25.0005D	NUM	CL	CHLORINE RESIDUAL	10024A1025N2507.DWG
AR	25.0005D	AE-25.0005D	TREND	CL	CHLORINE RESIDUAL	10024A1025N2507.DWG
QAH	25.0005D	AE-25.0005D	SP	CL	CHLORINE RESIDUAL	10024A1025N2507.DWG
QAL	25.0005D	AE-25.0005D	SP	CL	CHLORINE RESIDUAL	10024A1025N2507.DWG
AAH	25.0005E	AE-25.0005E	ALARM	SDI	SILT DENSITY INDEX	10024A1025N2507.DWG
AI	25.0005E	AE-25.0005E	NUM	SDI	SILT DENSITY INDEX	10024A1025N2507.DWG
AR	25.0005E	AE-25.0005E	TREND	SDI	SILT DENSITY INDEX	10024A1025N2507.DWG
QAH	25.0005E	AE-25.0005E	SP	SDI	SILT DENSITY INDEX	10024A1025N2507.DWG
PAH	25.0006A	PE-25.0006A	ALARM		PRESSURE TRANSMITTER	10024A1025N2506.DWG
PAL	25.0006A	PE-25.0006A	ALARM		PRESSURE TRANSMITTER	10024A1025N2506.DWG
PI	25.0006A	PE-25.0006A	NUM		PRESSURE TRANSMITTER	10024A1025N2506.DWG
PR	25.0006A	PE-25.0006A	TREND		PRESSURE TRANSMITTER	10024A1025N2506.DWG
QPH	25.0006A	PE-25.0006A	SP		PRESSURE TRANSMITTER	10024A1025N2506.DWG
QPL	25.0006A	PE-25.0006A	SP		PRESSURE TRANSMITTER	10024A1025N2506.DWG
PAH	25.0007A	PE-25.0007A	ALARM		PRESSURE TRANSMITTER	10024A1025N2506.DWG
PAL	25.0007A	PE-25.0007A	ALARM		PRESSURE TRANSMITTER	10024A1025N2506.DWG
PI	25.0007A	PE-25.0007A	NUM		PRESSURE TRANSMITTER	10024A1025N2506.DWG
PR	25.0007A	PE-25.0007A	TREND		PRESSURE TRANSMITTER	10024A1025N2506.DWG
QPH	25.0007A	PE-25.0007A	SP		PRESSURE TRANSMITTER	10024A1025N2506.DWG
QPL	25.0007A	PE-25.0007A	SP		PRESSURE TRANSMITTER	10024A1025N2506.DWG
LAH	25.0009	LE-25.0009	ALARM		LEVEL TRANSMITTER	10024A1025N2530.DWG
LAL	25.0009	LE-25.0009	ALARM		LEVEL TRANSMITTER	10024A1025N2530.DWG
LI	25.0009	LE-25.0009	NUM		LEVEL TRANSMITTER	10024A1025N2530.DWG
LR	25.0009	LE-25.0009	TREND		LEVEL TRANSMITTER	10024A1025N2530.DWG
QLH	25.0009	LE-25.0009	SP		LEVEL TRANSMITTER	10024A1025N2530.DWG
QLL	25.0009	LE-25.0009	SP		LEVEL TRANSMITTER	10024A1025N2530.DWG

HMI Listing

Tag	Loop	Equipment	Function	Description	Service	Drawing #
QTH	25.0009	TE-25.0009	SP		TEMPERATURE TRANSMITTER	10024A1025N2530.DWG
QTL	25.0009	TE-25.0009	SP		TEMPERATURE TRANSMITTER	10024A1025N2530.DWG
TAH	25.0009	TE-25.0009	ALARM		TEMPERATURE TRANSMITTER	10024A1025N2530.DWG
TAL	25.0009	TE-25.0009	ALARM		TEMPERATURE TRANSMITTER	10024A1025N2530.DWG
TI	25.0009	TE-25.0009	NUM		TEMPERATURE TRANSMITTER	10024A1025N2530.DWG
TR	25.0009	TE-25.0009	TREND		TEMPERATURE TRANSMITTER	10024A1025N2530.DWG
LAH	25.0010	LE-25.0010	ALARM		LEVEL TRANSMITTER	10024A1025N2531.DWG
LAL	25.0010	LE-25.0010	ALARM		LEVEL TRANSMITTER	10024A1025N2531.DWG
LI	25.0010	LE-25.0010	NUM		LEVEL TRANSMITTER	10024A1025N2531.DWG
LR	25.0010	LE-25.0010	TREND		LEVEL TRANSMITTER	10024A1025N2531.DWG
QLH	25.0010	LE-25.0010	SP		LEVEL TRANSMITTER	10024A1025N2531.DWG
QLL	25.0010	LE-25.0010	SP		LEVEL TRANSMITTER	10024A1025N2531.DWG
QTH	25.0010	TE-25.0010	SP		TEMPERATURE TRANSMITTER	10024A1025N2531.DWG
QTL	25.0010	TE-25.0010	SP		TEMPERATURE TRANSMITTER	10024A1025N2531.DWG
TAH	25.0010	TE-25.0010	ALARM		TEMPERATURE TRANSMITTER	10024A1025N2531.DWG
TAL	25.0010	TE-25.0010	ALARM		TEMPERATURE TRANSMITTER	10024A1025N2531.DWG
TI	25.0010	TE-25.0010	NUM		TEMPERATURE TRANSMITTER	10024A1025N2531.DWG
TR	25.0010	TE-25.0010	TREND		TEMPERATURE TRANSMITTER	10024A1025N2531.DWG
FAL	25.0011	FE-25.0011	ALARM		THERMAL FLOW SWITCH	10024A1025N2531.DWG
PAL	25.0015	PE-25.0015	ALARM		PRESSURE SWITCH LOW	10024A1025N2531.DWG
PAH	25.0017	PE-25.0017	ALARM		PRESSURE TRANSMITTER	10024A1025N2532.DWG
PAL	25.0017	PE-25.0017	ALARM		PRESSURE TRANSMITTER	10024A1025N2532.DWG
PI	25.0017	PE-25.0017	NUM		PRESSURE TRANSMITTER	10024A1025N2532.DWG
PR	25.0017	PE-25.0017	TREND		PRESSURE TRANSMITTER	10024A1025N2532.DWG
QPH	25.0017	PE-25.0017	SP		PRESSURE TRANSMITTER	10024A1025N2532.DWG
QPL	25.0017	PE-25.0017	SP		PRESSURE TRANSMITTER	10024A1025N2532.DWG
FAH	25.0018	FE-25.0018	ALARM		FLOW METER	10024A1025N2532.DWG

HMI Listing

Tag	Loop	Equipment	Function	Description	Service	Drawing #
FAL	25.0018	FE-25.0018	ALARM		FLOW METER	10024A1025N2532.DWG
FI	25.0018	FE-25.0018	NUM		FLOW METER	10024A1025N2532.DWG
FQI	25.0018	FE-25.0018	NUM		FLOW METER	10024A1025N2532.DWG
FR	25.0018	FE-25.0018	TREND		FLOW METER	10024A1025N2532.DWG
QFH	25.0018	FE-25.0018	SP		FLOW METER	10024A1025N2532.DWG
QFL	25.0018	FE-25.0018	SP		FLOW METER	10024A1025N2532.DWG
LAH	25.0019	LE-25.0019	ALARM		SUMP LEVEL	10024A1025N2533.DWG
LALL	25.0019	LE-25.0019	ALARM		SUMP LEVEL	10024A1025N2533.DWG
PAL	25.0101	PE-25.0101	ALARM		PRESSURE TRANSMITTER	10024A1025N2510.DWG
AAH	25.0102	AE-25.0102	ALARM	COND	CONDUCTIVITY INSTRUMENT	10024A1025N2511.DWG
AAL	25.0102	AE-25.0102	ALARM	COND	CONDUCTIVITY INSTRUMENT	10024A1025N2511.DWG
AI	25.0102	AE-25.0102	NUM	COND	CONDUCTIVITY INSTRUMENT	10024A1025N2511.DWG
AR	25.0102	AE-25.0102	TREND	COND	CONDUCTIVITY INSTRUMENT	10024A1025N2511.DWG
FAH	25.0102	FE-25.0102	ALARM		VENTURI FLOW METER	10024A1025N2511.DWG
FAL	25.0102	FE-25.0102	ALARM		VENTURI FLOW METER	10024A1025N2511.DWG
FI	25.0102	FE-25.0102	NUM		VENTURI FLOW METER	10024A1025N2511.DWG
FQI	25.0102	FE-25.0102	NUM		VENTURI FLOW METER	10024A1025N2511.DWG
FR	25.0102	FE-25.0102	TREND		VENTURI FLOW METER	10024A1025N2511.DWG
PAH	25.0102	PE-25.0102	ALARM		PRESSURE TRANSMITTER	10024A1025N2511.DWG
PAL	25.0102	PE-25.0102	ALARM		PRESSURE TRANSMITTER	10024A1025N2511.DWG
PI	25.0102	PE-25.0102	NUM		PRESSURE TRANSMITTER	10024A1025N2511.DWG
PR	25.0102	PE-25.0102	TREND		PRESSURE TRANSMITTER	10024A1025N2511.DWG
QAH	25.0102	AE-25.0102	SP	COND	CONDUCTIVITY INSTRUMENT	10024A1025N2511.DWG
QAL	25.0102	AE-25.0102	SP	COND	CONDUCTIVITY INSTRUMENT	10024A1025N2511.DWG
QFH	25.0102	FE-25.0102	SP		VENTURI FLOW METER	10024A1025N2511.DWG
QFL	25.0102	FE-25.0102	SP		VENTURI FLOW METER	10024A1025N2511.DWG
QPH	25.0102	PE-25.0102	SP		PRESSURE TRANSMITTER	10024A1025N2511.DWG

HMI Listing

Tag	Loop	Equipment	Function	Description	Service	Drawing #
QPL	25.0102	PE-25.0102	SP		PRESSURE TRANSMITTER	10024A1025N2511.DWG
PAL	25.0103A	PE-25.0103A	ALARM		PRESSURE TRANSMITTER	10024A1025N2513.DWG
PI	25.0103A	PE-25.0103A	NUM		PRESSURE TRANSMITTER	10024A1025N2513.DWG
PR	25.0103A	PE-25.0103A	TREND		PRESSURE TRANSMITTER	10024A1025N2513.DWG
QPL	25.0103A	PE-25.0103A	SP		PRESSURE TRANSMITTER	10024A1025N2513.DWG
PAH	25.0104A	PE-25.0104A	ALARM		PRESSURE TRANSMITTER	10024A1025N2512.DWG
PAL	25.0104A	PE-25.0104A	ALARM		PRESSURE TRANSMITTER	10024A1025N2512.DWG
PI	25.0104A	PE-25.0104A	NUM		PRESSURE TRANSMITTER	10024A1025N2512.DWG
PR	25.0104A	PE-25.0104A	TREND		PRESSURE TRANSMITTER	10024A1025N2512.DWG
QPH	25.0104A	PE-25.0104A	SP		PRESSURE TRANSMITTER	10024A1025N2512.DWG
QPL	25.0104A	PE-25.0104A	SP		PRESSURE TRANSMITTER	10024A1025N2512.DWG
PAH	25.0104B	PE-25.0104B	ALARM		PRESSURE TRANSMITTER	10024A1025N2512.DWG
PAL	25.0104B	PE-25.0104B	ALARM		PRESSURE TRANSMITTER	10024A1025N2512.DWG
PI	25.0104B	PE-25.0104B	NUM		PRESSURE TRANSMITTER	10024A1025N2512.DWG
PR	25.0104B	PE-25.0104B	TREND		PRESSURE TRANSMITTER	10024A1025N2512.DWG
QPH	25.0104B	PE-25.0104B	SP		PRESSURE TRANSMITTER	10024A1025N2512.DWG
QPL	25.0104B	PE-25.0104B	SP		PRESSURE TRANSMITTER	10024A1025N2512.DWG
FAL	25.0401	FE-25.0401	ALARM	FLOW	THERMAL FLOW SWITCH	10024A1025N2525.DWG
PAL	25.0401	PE-25.0401	ALARM		PRESSURE TRANSMITTER	10024A1025N2525.DWG
FAL	25.0404	FE-25.0404	ALARM	FLOW	THERMAL FLOW SWITCH	10024A1025N2527.DWG
PAL	25.0404	PE-25.0404	ALARM	PRESS	PRESSURE SWITCH LOW	10024A1025N2527.DWG
PAH	25.0404A	PE-25.0404A	ALARM		PRESSURE TRANSMITTER	10024A1025N2527.DWG
PAL	25.0404A	PE-25.0404A	ALARM		PRESSURE TRANSMITTER	10024A1025N2527.DWG
PI	25.0404A	PE-25.0404A	NUM		PRESSURE TRANSMITTER	10024A1025N2527.DWG
PR	25.0404A	PE-25.0404A	TREND		PRESSURE TRANSMITTER	10024A1025N2527.DWG
QPH	25.0404A	PE-25.0404A	SP		PRESSURE TRANSMITTER	10024A1025N2527.DWG
QPL	25.0404A	PE-25.0404A	SP		PRESSURE TRANSMITTER	10024A1025N2527.DWG

HMI Listing

Tag	Loop	Equipment	Function	Description	Service	Drawing #
PAH	25.0404B	PE-25.0404B	ALARM		PRESSURE TRANSMITTER	10024A1025N2527.DWG
PAL	25.0404B	PE-25.0404B	ALARM		PRESSURE TRANSMITTER	10024A1025N2527.DWG
PI	25.0404B	PE-25.0404B	NUM		PRESSURE TRANSMITTER	10024A1025N2527.DWG
PR	25.0404B	PE-25.0404B	TREND		PRESSURE TRANSMITTER	10024A1025N2527.DWG
QPH	25.0404B	PE-25.0404B	SP		PRESSURE TRANSMITTER	10024A1025N2527.DWG
QPL	25.0404B	PE-25.0404B	SP		PRESSURE TRANSMITTER	10024A1025N2527.DWG
FAH	25.0903	FE-25.0903	ALARM		FLOW METER	10024A1025N2534.DWG
FAL	25.0903	FE-25.0903	ALARM		FLOW METER	10024A1025N2534.DWG
FI	25.0903	FE-25.0903	NUM		FLOW METER	10024A1025N2534.DWG
FR	25.0903	FE-25.0903	TREND		FLOW METER	10024A1025N2534.DWG
QFH	25.0903	FE-25.0903	SP		FLOW METER	10024A1025N2534.DWG
QFL	25.0903	FE-25.0903	SP		FLOW METER	10024A1025N2534.DWG
PAH	25.0904	PE-25.0904	ALARM		PRESSURE TRANSMITTER	10024A1025N2591.DWG
PAL	25.0904	PE-25.0904	ALARM		PRESSURE TRANSMITTER	10024A1025N2591.DWG
PI	25.0904	PE-25.0904	NUM		PRESSURE TRANSMITTER	10024A1025N2591.DWG
PR	25.0904	PE-25.0904	TREND		PRESSURE TRANSMITTER	10024A1025N2591.DWG
QPH	25.0904	PE-25.0904	SP		PRESSURE TRANSMITTER	10024A1025N2591.DWG
QPL	25.0904	PE-25.0904	SP		PRESSURE TRANSMITTER	10024A1025N2591.DWG
AAH	25.0904A	AE-25.0904A	ALARM	COND	CONDUCTIVITY TRANSMITTER	10024A1025N2591.DWG
AAL	25.0904A	AE-25.0904A	ALARM	COND	CONDUCTIVITY TRANSMITTER	10024A1025N2591.DWG
AI	25.0904A	AE-25.0904A	NUM	COND	CONDUCTIVITY TRANSMITTER	10024A1025N2591.DWG
AR	25.0904A	AE-25.0904A	TREND	COND	CONDUCTIVITY TRANSMITTER	10024A1025N2591.DWG
QAH	25.0904A	AE-25.0904A	SP	COND	CONDUCTIVITY TRANSMITTER	10024A1025N2591.DWG
QAL	25.0904A	AE-25.0904A	SP	COND	CONDUCTIVITY TRANSMITTER	10024A1025N2591.DWG
AAH	25.0904B	AE-25.0904B	ALARM	CL	CHLORINE RESIDUAL	10024A1025N2591.DWG
AAL	25.0904B	AE-25.0904B	ALARM	CL	CHLORINE RESIDUAL	10024A1025N2591.DWG
AI	25.0904B	AE-25.0904B	NUM	CL	CHLORINE RESIDUAL	10024A1025N2591.DWG

HMI Listing

Tag	Loop	Equipment	Function	Description	Service	Drawing #
AR	25.0904B	AE-25.0904B	TREND	CL	CHLORINE RESIDUAL	10024A1025N2591.DWG
QAH	25.0904B	AE-25.0904B	SP	CL	CHLORINE RESIDUAL	10024A1025N2591.DWG
QAL	25.0904B	AE-25.0904B	SP	CL	CHLORINE RESIDUAL	10024A1025N2591.DWG
AAH	25.0904C	AE-25.0904C	ALARM	TURB	TURBIDITY	10024A1025N2591.DWG
AI	25.0904C	AE-25.0904C	NUM	TURB	TURBIDITY	10024A1025N2591.DWG
AR	25.0904C	AE-25.0904C	TREND	TURB	TURBIDITY	10024A1025N2591.DWG
QAH	25.0904C	AE-25.0904C	SP	TURB	TURBIDITY	10024A1025N2591.DWG
AAH	25.0904D	AE-25.0904D	ALARM	pH	PH	10024A1025N2591.DWG
AAL	25.0904D	AE-25.0904D	ALARM	pH	PH	10024A1025N2591.DWG
AI	25.0904D	AE-25.0904D	NUM	pH	PH	10024A1025N2591.DWG
AR	25.0904D	AE-25.0904D	TREND	pH	PH	10024A1025N2591.DWG
QAH	25.0904D	AE-25.0904D	SP	pH	PH	10024A1025N2591.DWG
QAL	25.0904D	AE-25.0904D	SP	pH	PH	10024A1025N2591.DWG
TI	25.0904D	AE-25.0904D	NUM		PH	10024A1025N2591.DWG
TR	25.0904D	AE-25.0904D	TREND		PH	10024A1025N2591.DWG
FAH	25.0905	FE-25.0905	ALARM		FLOW METER	10024A1025N2592.DWG
FAL	25.0905	FE-25.0905	ALARM		FLOW METER	10024A1025N2592.DWG
FI	25.0905	FE-25.0905	NUM		FLOW METER	10024A1025N2592.DWG
FQI	25.0905	FE-25.0905	NUM		FLOW METER	10024A1025N2592.DWG
FR	25.0905	FE-25.0905	TREND		FLOW METER	10024A1025N2592.DWG
PAH	25.0905	PE-25.0905	ALARM		PRESSURE TRANSMITTER	10024A1025N2592.DWG
PAL	25.0905	PE-25.0905	ALARM		PRESSURE TRANSMITTER	10024A1025N2592.DWG
PI	25.0905	PE-25.0905	NUM		PRESSURE TRANSMITTER	10024A1025N2592.DWG
PR	25.0905	PE-25.0905	TREND		PRESSURE TRANSMITTER	10024A1025N2592.DWG
QFH	25.0905	FE-25.0905	SP		FLOW METER	10024A1025N2592.DWG
QFL	25.0905	FE-25.0905	SP		FLOW METER	10024A1025N2592.DWG
QPH	25.0905	PE-25.0905	SP		PRESSURE TRANSMITTER	10024A1025N2592.DWG

HMI Listing

Tag	Loop	Equipment	Function	Description	Service	Drawing #
QPL	25.0905	PE-25.0905	SP		PRESSURE TRANSMITTER	10024A1025N2592.DWG
AAH	25.0905A	AE-25.0905A	ALARM	COND	CONDUCTIVITY TRANSMITTER	10024A1025N2592.DWG
AAL	25.0905A	AE-25.0905A	ALARM	COND	CONDUCTIVITY TRANSMITTER	10024A1025N2592.DWG
AI	25.0905A	AE-25.0905A	NUM	COND	CONDUCTIVITY TRANSMITTER	10024A1025N2592.DWG
AR	25.0905A	AE-25.0905A	TREND	COND	CONDUCTIVITY TRANSMITTER	10024A1025N2592.DWG
QAH	25.0905A	AE-25.0905A	SP	COND	CONDUCTIVITY TRANSMITTER	10024A1025N2592.DWG
QAL	25.0905A	AE-25.0905A	SP	COND	CONDUCTIVITY TRANSMITTER	10024A1025N2592.DWG
AAH	25.0905B	AE-25.0905B	ALARM	TURB	TURBIDITY	10024A1025N2592.DWG
AI	25.0905B	AE-25.0905B	NUM	TURB	TURBIDITY	10024A1025N2592.DWG
AR	25.0905B	AE-25.0905B	TREND	TURB	TURBIDITY	10024A1025N2592.DWG
QAH	25.0905B	AE-25.0905B	SP	TURB	TURBIDITY	10024A1025N2592.DWG
AAH	25.0905C	AE-25.0905C	ALARM	pH	PH	10024A1025N2592.DWG
AAL	25.0905C	AE-25.0905C	ALARM	pH	PH	10024A1025N2592.DWG
AI	25.0905C	AE-25.0905C	NUM	pH	PH	10024A1025N2592.DWG
AR	25.0905C	AE-25.0905C	TREND	pH	PH	10024A1025N2592.DWG
QAH	25.0905C	AE-25.0905C	SP	pH	PH	10024A1025N2592.DWG
QAL	25.0905C	AE-25.0905C	SP	pH	PH	10024A1025N2592.DWG
TI	25.0905C	AE-25.0905C	NUM		PH	10024A1025N2592.DWG
TR	25.0905C	AE-25.0905C	TREND		PH	10024A1025N2592.DWG
FAL	25.0906A	FE-25.0906A	ALARM		THERMAL FLOW SWITCH	10024A1025N2593.DWG
FAL	25.0906B	FE-25.0906B	ALARM		THERMAL FLOW SWITCH	10024A1025N2593.DWG
AAH	26.0301A	AE-26.0301A	ALARM	COND	CONDUCTIVITY INSTRUMENT	10024A1025N2601.DWG
AAL	26.0301A	AE-26.0301A	ALARM	COND	CONDUCTIVITY INSTRUMENT	10024A1025N2601.DWG
AI	26.0301A	AE-26.0301A	NUM	COND	CONDUCTIVITY INSTRUMENT	10024A1025N2601.DWG
AR	26.0301A	AE-26.0301A	TREND	COND	CONDUCTIVITY INSTRUMENT	10024A1025N2601.DWG
FAH	26.0301A	FE-26.0301A	ALARM		FLOW METER	10024A1025N2601.DWG
FAL	26.0301A	FE-26.0301A	ALARM		FLOW METER	10024A1025N2601.DWG

HMI Listing

Tag	Loop	Equipment	Function	Description	Service	Drawing #
FI	26.0301A	FE-26.0301A	NUM		FLOW METER	10024A1025N2601.DWG
FQI	26.0301A	FE-26.0301A	NUM		FLOW METER	10024A1025N2601.DWG
FR	26.0301A	FE-26.0301A	TREND		FLOW METER	10024A1025N2601.DWG
QAH	26.0301A	AE-26.0301A	SP	COND	CONDUCTIVITY INSTRUMENT	10024A1025N2601.DWG
QAL	26.0301A	AE-26.0301A	SP	COND	CONDUCTIVITY INSTRUMENT	10024A1025N2601.DWG
QFH	26.0301A	FE-26.0301A	SP		FLOW METER	10024A1025N2601.DWG
QFL	26.0301A	FE-26.0301A	SP		FLOW METER	10024A1025N2601.DWG
FAH	26.0301B	FE-26.0301B	ALARM		FLOW METER	10024A1025N2601.DWG
FAL	26.0301B	FE-26.0301B	ALARM		FLOW METER	10024A1025N2601.DWG
FI	26.0301B	FE-26.0301B	NUM		FLOW METER	10024A1025N2601.DWG
FQI	26.0301B	FE-26.0301B	NUM		FLOW METER	10024A1025N2601.DWG
FR	26.0301B	FE-26.0301B	TREND		FLOW METER	10024A1025N2601.DWG
QFH	26.0301B	FE-26.0301B	SP		FLOW METER	10024A1025N2601.DWG
QFL	26.0301B	FE-26.0301B	SP		FLOW METER	10024A1025N2601.DWG
AAH	26.0401F	AE-26.0401F	ALARM	COND	CONDUCTIVITY INSTRUMENT	10024A1025N2603.DWG
AAL	26.0401F	AE-26.0401F	ALARM	COND	CONDUCTIVITY INSTRUMENT	10024A1025N2603.DWG
AI	26.0401F	AE-26.0401F	NUM	COND	CONDUCTIVITY INSTRUMENT	10024A1025N2603.DWG
AR	26.0401F	AE-26.0401F	TREND	COND	CONDUCTIVITY INSTRUMENT	10024A1025N2603.DWG
QAH	26.0401F	AE-26.0401F	SP	COND	CONDUCTIVITY INSTRUMENT	10024A1025N2603.DWG
QAL	26.0401F	AE-26.0401F	SP	COND	CONDUCTIVITY INSTRUMENT	10024A1025N2603.DWG
FAH	66.0801	FE-66.0801	ALARM		2SO4 METERING PUMPS DISCHARGE FLOW TRANSMITTE	10024A1025N6601.DWG
FAH	66.0801	FE-66.0801	ALARM		12SO4 EMERGENCY SHOWER & EYEWASH FLOW SWITCH	10024A1025N6601.DWG
FAH	66.0801	FE-66.0801	ALARM		12SO4 EMERGENCY SHOWER & EYEWASH FLOW SWITCH	10024A1025N6604.DWG
FAH	66.0801	FE-66.0801	ALARM		2SO4 METERING PUMPS DISCHARGE FLOW TRANSMITTE	10024A1025N6604.DWG
FAL	66.0801	FE-66.0801	ALARM		12SO4 EMERGENCY SHOWER & EYEWASH FLOW SWITCH	10024A1025N6604.DWG
FAL	66.0801	FE-66.0801	ALARM		2SO4 METERING PUMPS DISCHARGE FLOW TRANSMITTE	10024A1025N6604.DWG
FR	66.0801	FE-66.0801	TREND		12SO4 EMERGENCY SHOWER & EYEWASH FLOW SWITCH	10024A1025N6604.DWG

HMI Listing

Tag	Loop	Equipment	Function	Description	Service	Drawing #
FR	66.0801	FE-66.0801	TREND		2SO4 METERING PUMPS DISCHARGE FLOW TRANSMITTE	10024A1025N6604.DWG
QFH	66.0801	FE-66.0801	SP		12SO4 EMERGENCY SHOWER & EYEWASH FLOW SWITCH	10024A1025N6604.DWG
QFH	66.0801	FE-66.0801	SP		2SO4 METERING PUMPS DISCHARGE FLOW TRANSMITTE	10024A1025N6604.DWG
QFL	66.0801	FE-66.0801	SP		2SO4 METERING PUMPS DISCHARGE FLOW TRANSMITTE	10024A1025N6604.DWG
QFL	66.0801	FE-66.0801	SP		12SO4 EMERGENCY SHOWER & EYEWASH FLOW SWITCH	10024A1025N6604.DWG
LAH	66.0801A	LE-66.0801A	ALARM		H2SO4 STORAGE CONTAINMENT HIGH LEVEL SWITCH	10024A1025N6601.DWG
LAH	66.0801B	LE-66.0801B	ALARM		H2SO4 TANK NO. 1 LEVEL INDICATING TRANSMITTER	10024A1025N6601.DWG
LAL	66.0801B	LE-66.0801B	ALARM		H2SO4 TANK NO. 1 LEVEL INDICATING TRANSMITTER	10024A1025N6601.DWG
LI	66.0801B	LE-66.0801B	NUM		H2SO4 TANK NO. 1 LEVEL INDICATING TRANSMITTER	10024A1025N6601.DWG
LR	66.0801B	LE-66.0801B	TREND		H2SO4 TANK NO. 1 LEVEL INDICATING TRANSMITTER	10024A1025N6601.DWG
QLH	66.0801B	LE-66.0801B	SP		H2SO4 TANK NO. 1 LEVEL INDICATING TRANSMITTER	10024A1025N6601.DWG
QLL	66.0801B	LE-66.0801B	SP		H2SO4 TANK NO. 1 LEVEL INDICATING TRANSMITTER	10024A1025N6601.DWG
FAH	66.0802	FE-66.0802	ALARM		2SO4 METERING PUMPS DISCHARGE FLOW TRANSMITTE	10024A1025N6604.DWG
FAL	66.0802	FE-66.0802	ALARM		2SO4 METERING PUMPS DISCHARGE FLOW TRANSMITTE	10024A1025N6604.DWG
FR	66.0802	FE-66.0802	TREND		2SO4 METERING PUMPS DISCHARGE FLOW TRANSMITTE	10024A1025N6604.DWG
QFH	66.0802	FE-66.0802	SP		2SO4 METERING PUMPS DISCHARGE FLOW TRANSMITTE	10024A1025N6604.DWG
QFL	66.0802	FE-66.0802	SP		2SO4 METERING PUMPS DISCHARGE FLOW TRANSMITTE	10024A1025N6604.DWG
FAH	66.0804	FE-66.0804	ALARM		2SO4 METERING PUMPS DISCHARGE FLOW TRANSMITTE	10024A1025N6602.DWG
FAL	66.0804	FE-66.0804	ALARM		2SO4 METERING PUMPS DISCHARGE FLOW TRANSMITTE	10024A1025N6602.DWG
FR	66.0804	FE-66.0804	TREND		2SO4 METERING PUMPS DISCHARGE FLOW TRANSMITTE	10024A1025N6602.DWG
QFH	66.0804	FE-66.0804	SP		2SO4 METERING PUMPS DISCHARGE FLOW TRANSMITTE	10024A1025N6602.DWG
QFL	66.0804	FE-66.0804	SP		2SO4 METERING PUMPS DISCHARGE FLOW TRANSMITTE	10024A1025N6602.DWG
PAH	66.0805	PE-66.0805	ALARM		PRESSURE SWITCH HIGH	10024A1025N6603.DWG
FAH	66.0901	FE-66.0901	ALARM		ACL2 METERING PUMPS DISCHARGE FLOW TRANSMITTE	10024A1025N6605.DWG
FAH	66.0901	FE-66.0901	ALARM		ACL2 METERING PUMPS DISCHARGE FLOW TRANSMITTE	10024A1025N6606.DWG
FAH	66.0901	FE-66.0901	ALARM		CaCl2 EMERGENCY SHOWER & EYEWASH FLOW SWITCH	10024A1025N6606.DWG
FAH	66.0901	FE-66.0901	ALARM		CaCl2 EMERGENCY SHOWER & EYEWASH FLOW SWITCH	10024A1025N6605.DWG

HMI Listing

Tag	Loop	Equipment	Function	Description	Service	Drawing #
FAL	66.0901	FE-66.0901	ALARM		ACL2 METERING PUMPS DISCHARGE FLOW TRANSMITTE	10024A1025N6606.DWG
FAL	66.0901	FE-66.0901	ALARM		CaCl2 EMERGENCY SHOWER & EYEWASH FLOW SWITCH	10024A1025N6606.DWG
FR	66.0901	FE-66.0901	TREND		CaCl2 EMERGENCY SHOWER & EYEWASH FLOW SWITCH	10024A1025N6606.DWG
FR	66.0901	FE-66.0901	TREND		ACL2 METERING PUMPS DISCHARGE FLOW TRANSMITTE	10024A1025N6606.DWG
LAH	66.0901	LE-66.0901	ALARM		CACL2 TANK NO. 1 LEVEL INDICATING TRANSMITTER	10024A1025N6605.DWG
LAL	66.0901	LE-66.0901	ALARM		CACL2 TANK NO. 1 LEVEL INDICATING TRANSMITTER	10024A1025N6605.DWG
LI	66.0901	LE-66.0901	NUM		CACL2 TANK NO. 1 LEVEL INDICATING TRANSMITTER	10024A1025N6605.DWG
LR	66.0901	LE-66.0901	TREND		CACL2 TANK NO. 1 LEVEL INDICATING TRANSMITTER	10024A1025N6605.DWG
QFH	66.0901	FE-66.0901	SP		ACL2 METERING PUMPS DISCHARGE FLOW TRANSMITTE	10024A1025N6606.DWG
QFH	66.0901	FE-66.0901	SP		CaCl2 EMERGENCY SHOWER & EYEWASH FLOW SWITCH	10024A1025N6606.DWG
QFL	66.0901	FE-66.0901	SP		ACL2 METERING PUMPS DISCHARGE FLOW TRANSMITTE	10024A1025N6606.DWG
QFL	66.0901	FE-66.0901	SP		CaCl2 EMERGENCY SHOWER & EYEWASH FLOW SWITCH	10024A1025N6606.DWG
QLH	66.0901	LE-66.0901	SP		CACL2 TANK NO. 1 LEVEL INDICATING TRANSMITTER	10024A1025N6605.DWG
QLL	66.0901	LE-66.0901	SP		CACL2 TANK NO. 1 LEVEL INDICATING TRANSMITTER	10024A1025N6605.DWG
LAH	66.0903	LE-66.0903	ALARM		ACL2 STORAGE CONTAINMENT DIKE HIGH LEVEL SWITCI	10024A1025N6605.DWG
FAH	66.0904	FE-66.0904	ALARM		CaCl2 EMERGENCY SHOWER & EYEWASH FLOW SWITCH	10024A1025N6606.DWG
FAH	69.0101	FE-69.0101	ALARM		DISCHARGE FLOW TRANSMITTER	10024A1025N6901.DWG
FAL	69.0101	FE-69.0101	ALARM		DISCHARGE FLOW TRANSMITTER	10024A1025N6901.DWG
FR	69.0101	FE-69.0101	TREND		DISCHARGE FLOW TRANSMITTER	10024A1025N6901.DWG
QAH	69.0101	WE2-69.0101	SP	WEIGHT		10024A1025N6901.DWG
QFH	69.0101	FE-69.0101	SP		DISCHARGE FLOW TRANSMITTER	10024A1025N6901.DWG
QFL	69.0101	FE-69.0101	SP		DISCHARGE FLOW TRANSMITTER	10024A1025N6901.DWG
WAL	69.0101	WE2-69.0101	SP	WEIGHT		10024A1025N6901.DWG
WI	69.0101	WE2-69.0101	NUM	WEIGHT		10024A1025N6901.DWG
WR	69.0101	WE2-69.0101	TREND	WEIGHT		10024A1025N6901.DWG
FAH	71.5001	FE-71.5001	ALARM		FLOW TOTALIZER	10024A1025N2535.DWG
FAL	71.5001	FE-71.5001	ALARM		FLOW TOTALIZER	10024A1025N2535.DWG

HMI Listing

Tag	Loop	Equipment	Function	Description	Service	Drawing #
FI	71.5001	FE-71.5001	NUM		FLOW TOTALIZER	10024A1025N2535.DWG
FQI	71.5001	FE-71.5001	NUM		FLOW TOTALIZER	10024A1025N2535.DWG
FR	71.5001	FE-71.5001	TREND		FLOW TOTALIZER	10024A1025N2535.DWG
PAH	71.5001	PE-71.5001	ALARM		PRESSURE TRANSMITTER	10024A1025N2535.DWG
PAL	71.5001	PE-71.5001	ALARM		PRESSURE TRANSMITTER	10024A1025N2535.DWG
PI	71.5001	PE-71.5001	NUM		PRESSURE TRANSMITTER	10024A1025N2535.DWG
PR	71.5001	PE-71.5001	TREND		PRESSURE TRANSMITTER	10024A1025N2535.DWG
QFH	71.5001	FE-71.5001	SP		FLOW TOTALIZER	10024A1025N2535.DWG
QFL	71.5001	FE-71.5001	SP		FLOW TOTALIZER	10024A1025N2535.DWG
QPH	71.5001	PE-71.5001	SP		PRESSURE TRANSMITTER	10024A1025N2535.DWG
QPL	71.5001	PE-71.5001	SP		PRESSURE TRANSMITTER	10024A1025N2535.DWG
PAH	71.5005	PE-71.5005	ALARM		PRESSURE TRANSMITTER	10024A1025N2535.DWG
PAL	71.5005	PE-71.5005	ALARM		PRESSURE TRANSMITTER	10024A1025N2535.DWG
PI	71.5005	PE-71.5005	NUM		PRESSURE TRANSMITTER	10024A1025N2535.DWG
PR	71.5005	PE-71.5005	TREND		PRESSURE TRANSMITTER	10024A1025N2535.DWG
QPH	71.5005	PE-71.5005	SP		PRESSURE TRANSMITTER	10024A1025N2535.DWG
QPL	71.5005	PE-71.5005	SP		PRESSURE TRANSMITTER	10024A1025N2535.DWG
PAH	71.5006	PE-71.5006	ALARM		PRESSURE TRANSMITTER	10024A1025N2535.DWG
PAL	71.5006	PE-71.5006	ALARM		PRESSURE TRANSMITTER	10024A1025N2535.DWG
PI	71.5006	PE-71.5006	NUM		PRESSURE TRANSMITTER	10024A1025N2535.DWG
PR	71.5006	PE-71.5006	TREND		PRESSURE TRANSMITTER	10024A1025N2535.DWG
QPH	71.5006	PE-71.5006	SP		PRESSURE TRANSMITTER	10024A1025N2535.DWG
QPL	71.5006	PE-71.5006	SP		PRESSURE TRANSMITTER	10024A1025N2535.DWG
PAH	71.5007	PE-71.5007	ALARM		PRESSURE TRANSMITTER	10024A1025N2535.DWG
PAL	71.5007	PE-71.5007	ALARM		PRESSURE TRANSMITTER	10024A1025N2535.DWG
PI	71.5007	PE-71.5007	NUM		PRESSURE TRANSMITTER	10024A1025N2535.DWG
PR	71.5007	PE-71.5007	TREND		PRESSURE TRANSMITTER	10024A1025N2535.DWG

HMI Listing

Tag	Loop	Equipment	Function	Description	Service	Drawing #
QPH	71.5007	PE-71.5007	SP		PRESSURE TRANSMITTER	10024A1025N2535.DWG
QPL	71.5007	PE-71.5007	SP		PRESSURE TRANSMITTER	10024A1025N2535.DWG
XA	79.2001	XS1-79.2001	ALARM	INTRUSION	DOOR NO. 101-1 INTRUSION SWITCH	10024A1021N7910.DWG
PDAH	79.3101	PE-79.3101	ALARM		PRESSURE DIFFERENTIAL TRANSMITTER	10024A1025N7901.DWG

HMI Listing

Tag	Loop	Equipment	Function	Description	Service	Drawing #
FAL	21.0301	FE-21.0301	ALARM	FLOW	THERMAL FLOW SWITCH	10024A1021N2101.DWG
FAL	21.0302	FE-21.0302	ALARM	FLOW	THERMAL FLOW SWITCH	10024A1021N2102.DWG
FAL	21.0303	FE-21.0303	ALARM	FLOW	THERMAL FLOW SWITCH	10024A1021N2103.DWG
FAH	21.0603	FE-21.0603	ALARM		FLOW METER	10024A1021N2105.DWG
FAL	21.0603	FE-21.0603	ALARM		FLOW METER	10024A1021N2105.DWG
FI	21.0603	FE-21.0603	NUM		FLOW METER	10024A1021N2105.DWG
FR	21.0603	FE-21.0603	TREND		FLOW METER	10024A1021N2105.DWG
QFH	21.0603	FE-21.0603	SP		FLOW METER	10024A1021N2105.DWG
QFL	21.0603	FE-21.0603	SP		FLOW METER	10024A1021N2105.DWG
FAH	24.0202A	FE-24.0202A	ALARM		FLOW METER	10024A1025N2403.DWG
FAL	24.0202A	FE-24.0202A	ALARM		FLOW METER	10024A1025N2403.DWG
FI	24.0202A	FE-24.0202A	NUM		FLOW METER	10024A1025N2403.DWG
FQI	24.0202A	FE-24.0202A	NUM		FLOW METER	10024A1025N2403.DWG
FR	24.0202A	FE-24.0202A	TREND		FLOW METER	10024A1025N2403.DWG
QFH	24.0202A	FE-24.0202A	SP		FLOW METER	10024A1025N2403.DWG
QFL	24.0202A	FE-24.0202A	SP		FLOW METER	10024A1025N2403.DWG
FAH	24.0202B	FE-24.0202B	ALARM		FLOW METER	10024A1025N2403.DWG
FAL	24.0202B	FE-24.0202B	ALARM		FLOW METER	10024A1025N2403.DWG
FI	24.0202B	FE-24.0202B	NUM		FLOW METER	10024A1025N2403.DWG
FQI	24.0202B	FE-24.0202B	NUM		FLOW METER	10024A1025N2403.DWG
FR	24.0202B	FE-24.0202B	TREND		FLOW METER	10024A1025N2403.DWG
QFH	24.0202B	FE-24.0202B	SP		FLOW METER	10024A1025N2403.DWG
QFL	24.0202B	FE-24.0202B	SP		FLOW METER	10024A1025N2403.DWG
FAH	24.0402A	FE-24.0402A	ALARM		FLOW METER	10024A1025N2403.DWG
FAL	24.0402A	FE-24.0402A	ALARM		FLOW METER	10024A1025N2403.DWG
FI	24.0402A	FE-24.0402A	NUM		FLOW METER	10024A1025N2403.DWG
FQI	24.0402A	FE-24.0402A	NUM		FLOW METER	10024A1025N2403.DWG

HMI Listing

Tag	Loop	Equipment	Function	Description	Service	Drawing #
FR	24.0402A	FE-24.0402A	TREND		FLOW METER	10024A1025N2403.DWG
QFH	24.0402A	FE-24.0402A	SP		FLOW METER	10024A1025N2403.DWG
QFL	24.0402A	FE-24.0402A	SP		FLOW METER	10024A1025N2403.DWG
FAH	24.0402B	FE-24.0402B	ALARM		FLOW METER	10024A1025N2403.DWG
FAL	24.0402B	FE-24.0402B	ALARM		FLOW METER	10024A1025N2403.DWG
FI	24.0402B	FE-24.0402B	NUM		FLOW METER	10024A1025N2403.DWG
FQI	24.0402B	FE-24.0402B	NUM		FLOW METER	10024A1025N2403.DWG
FR	24.0402B	FE-24.0402B	TREND		FLOW METER	10024A1025N2403.DWG
QFH	24.0402B	FE-24.0402B	SP		FLOW METER	10024A1025N2403.DWG
QFL	24.0402B	FE-24.0402B	SP		FLOW METER	10024A1025N2403.DWG
FAH	24.0602A	FE-24.0602A	ALARM		FLOW METER	10024A1025N2404.DWG
FAL	24.0602A	FE-24.0602A	ALARM		FLOW METER	10024A1025N2404.DWG
FI	24.0602A	FE-24.0602A	NUM		FLOW METER	10024A1025N2404.DWG
FQI	24.0602A	FE-24.0602A	NUM		FLOW METER	10024A1025N2404.DWG
FR	24.0602A	FE-24.0602A	TREND		FLOW METER	10024A1025N2404.DWG
QFH	24.0602A	FE-24.0602A	SP		FLOW METER	10024A1025N2404.DWG
QFL	24.0602A	FE-24.0602A	SP		FLOW METER	10024A1025N2404.DWG
FAH	24.0602B	FE-24.0602B	ALARM		FLOW METER	10024A1025N2404.DWG
FAL	24.0602B	FE-24.0602B	ALARM		FLOW METER	10024A1025N2404.DWG
FI	24.0602B	FE-24.0602B	NUM		FLOW METER	10024A1025N2404.DWG
FQI	24.0602B	FE-24.0602B	NUM		FLOW METER	10024A1025N2404.DWG
FR	24.0602B	FE-24.0602B	TREND		FLOW METER	10024A1025N2404.DWG
QFH	24.0602B	FE-24.0602B	SP		FLOW METER	10024A1025N2404.DWG
QFL	24.0602B	FE-24.0602B	SP		FLOW METER	10024A1025N2404.DWG
FAH	24.0802A	FE-24.0802A	ALARM		FLOW METER	10024A1025N2404.DWG
FAL	24.0802A	FE-24.0802A	ALARM		FLOW METER	10024A1025N2404.DWG
FI	24.0802A	FE-24.0802A	NUM		FLOW METER	10024A1025N2404.DWG

HMI Listing

Tag	Loop	Equipment	Function	Description	Service	Drawing #
FQI	24.0802A	FE-24.0802A	NUM		FLOW METER	10024A1025N2404.DWG
FR	24.0802A	FE-24.0802A	TREND		FLOW METER	10024A1025N2404.DWG
QFH	24.0802A	FE-24.0802A	SP		FLOW METER	10024A1025N2404.DWG
QFL	24.0802A	FE-24.0802A	SP		FLOW METER	10024A1025N2404.DWG
FAH	24.0802B	FE-24.0802B	ALARM		FLOW METER	10024A1025N2404.DWG
FAL	24.0802B	FE-24.0802B	ALARM		FLOW METER	10024A1025N2404.DWG
FI	24.0802B	FE-24.0802B	NUM		FLOW METER	10024A1025N2404.DWG
FQI	24.0802B	FE-24.0802B	NUM		FLOW METER	10024A1025N2404.DWG
FR	24.0802B	FE-24.0802B	TREND		FLOW METER	10024A1025N2404.DWG
QFH	24.0802B	FE-24.0802B	SP		FLOW METER	10024A1025N2404.DWG
QFL	24.0802B	FE-24.0802B	SP		FLOW METER	10024A1025N2404.DWG
FAL	25.0001	FE-25.0001	ALARM	FLOW	THERMAL FLOW SWITCH	10024A1025N2501.DWG
FAL	25.0002	FE-25.0002	ALARM	FLOW	THERMAL FLOW SWITCH	10024A1025N2502.DWG
FAL	25.0003	FE-25.0003	ALARM	FLOW	THERMAL FLOW SWITCH	10024A1025N2503.DWG
FAL	25.0101	FE-25.0101	ALARM	FLOW	THERMAL FLOW SWITCH	10024A1025N2510.DWG
AAH	25.0103A	AE-25.0103A	ALARM	COND	CONDUCTIVITY INSTRUMENT	10024A1025N2513.DWG
AAL	25.0103A	AE-25.0103A	ALARM	COND	CONDUCTIVITY INSTRUMENT	10024A1025N2513.DWG
AI	25.0103A	AE-25.0103A	NUM	COND	CONDUCTIVITY INSTRUMENT	10024A1025N2513.DWG
AR	25.0103A	AE-25.0103A	TREND	COND	CONDUCTIVITY INSTRUMENT	10024A1025N2513.DWG
FAH	25.0103A	FE-25.0103A	ALARM		VENTURI FLOW METER	10024A1025N2513.DWG
FAL	25.0103A	FE-25.0103A	ALARM		VENTURI FLOW METER	10024A1025N2513.DWG
FI	25.0103A	FE-25.0103A	NUM		VENTURI FLOW METER	10024A1025N2513.DWG
FQI	25.0103A	FE-25.0103A	NUM		VENTURI FLOW METER	10024A1025N2513.DWG
FR	25.0103A	FE-25.0103A	TREND		VENTURI FLOW METER	10024A1025N2513.DWG
PAH	25.0103A	PE-25.0103A	ALARM		PRESSURE TRANSMITTER	10024A1025N2513.DWG
QAH	25.0103A	AE-25.0103A	SP	COND	CONDUCTIVITY INSTRUMENT	10024A1025N2513.DWG
QAL	25.0103A	AE-25.0103A	SP	COND	CONDUCTIVITY INSTRUMENT	10024A1025N2513.DWG

HMI Listing

Tag	Loop	Equipment	Function	Description	Service	Drawing #
QFH	25.0103A	FE-25.0103A	SP		VENTURI FLOW METER	10024A1025N2513.DWG
QFL	25.0103A	FE-25.0103A	SP		VENTURI FLOW METER	10024A1025N2513.DWG
QPH	25.0103A	PE-25.0103A	SP		PRESSURE TRANSMITTER	10024A1025N2513.DWG
AAH	25.0103B	AE-25.0103B	ALARM	COND	CONDUCTIVITY INSTRUMENT	10024A1025N2513.DWG
AAL	25.0103B	AE-25.0103B	ALARM	COND	CONDUCTIVITY INSTRUMENT	10024A1025N2513.DWG
AI	25.0103B	AE-25.0103B	NUM	COND	CONDUCTIVITY INSTRUMENT	10024A1025N2513.DWG
AR	25.0103B	AE-25.0103B	TREND	COND	CONDUCTIVITY INSTRUMENT	10024A1025N2513.DWG
PAH	25.0103B	PE-25.0103B	ALARM		PRESSURE TRANSMITTER	10024A1025N2513.DWG
PAL	25.0103B	PE-25.0103B	ALARM		PRESSURE TRANSMITTER	10024A1025N2513.DWG
PI	25.0103B	PE-25.0103B	NUM		PRESSURE TRANSMITTER	10024A1025N2513.DWG
PR	25.0103B	PE-25.0103B	TREND		PRESSURE TRANSMITTER	10024A1025N2513.DWG
QAH	25.0103B	AE-25.0103B	SP	COND	CONDUCTIVITY INSTRUMENT	10024A1025N2513.DWG
QAL	25.0103B	AE-25.0103B	SP	COND	CONDUCTIVITY INSTRUMENT	10024A1025N2513.DWG
QPH	25.0103B	PE-25.0103B	SP		PRESSURE TRANSMITTER	10024A1025N2513.DWG
QPL	25.0103B	PE-25.0103B	SP		PRESSURE TRANSMITTER	10024A1025N2513.DWG
AAH	25.0103C	AE-25.0103C	ALARM	COND	CONDUCTIVITY INSTRUMENT	10024A1025N2513.DWG
AAL	25.0103C	AE-25.0103C	ALARM	COND	CONDUCTIVITY INSTRUMENT	10024A1025N2513.DWG
AI	25.0103C	AE-25.0103C	NUM	COND	CONDUCTIVITY INSTRUMENT	10024A1025N2513.DWG
AR	25.0103C	AE-25.0103C	TREND	COND	CONDUCTIVITY INSTRUMENT	10024A1025N2513.DWG
FAH	25.0103C	FE-25.0103C	ALARM		VENTURI FLOW METER	10024A1025N2513.DWG
FAL	25.0103C	FE-25.0103C	ALARM		VENTURI FLOW METER	10024A1025N2513.DWG
FI	25.0103C	FE-25.0103C	NUM		VENTURI FLOW METER	10024A1025N2513.DWG
FQI	25.0103C	FE-25.0103C	NUM		VENTURI FLOW METER	10024A1025N2513.DWG
FR	25.0103C	FE-25.0103C	TREND		VENTURI FLOW METER	10024A1025N2513.DWG
QAH	25.0103C	AE-25.0103C	SP	COND	CONDUCTIVITY INSTRUMENT	10024A1025N2513.DWG
QAL	25.0103C	AE-25.0103C	SP	COND	CONDUCTIVITY INSTRUMENT	10024A1025N2513.DWG
QFH	25.0103C	FE-25.0103C	SP		VENTURI FLOW METER	10024A1025N2513.DWG

HMI Listing

Tag	Loop	Equipment	Function	Description	Service	Drawing #
QFL	25.0103C	FE-25.0103C	SP		VENTURI FLOW METER	10024A1025N2513.DWG
FAL	25.0104	FE-25.0104	ALARM	FLOW	THERMAL FLOW SWITCH	10024A1025N2512.DWG
PAL	25.0104	PE-25.0104	ALARM	PRESS	PRESSURE SWITCH LOW	10024A1025N2512.DWG
FAL	25.0201	FE-25.0201	ALARM	FLOW	THERMAL FLOW SWITCH	10024A1025N2515.DWG
PAL	25.0201	PE-25.0201	ALARM		PRESSURE TRANSMITTER	10024A1025N2515.DWG
AAH	25.0202	AE-25.0202	ALARM	COND	CONDUCTIVITY INSTRUMENT	10024A1025N2516.DWG
AAL	25.0202	AE-25.0202	ALARM	COND	CONDUCTIVITY INSTRUMENT	10024A1025N2516.DWG
AI	25.0202	AE-25.0202	NUM	COND	CONDUCTIVITY INSTRUMENT	10024A1025N2516.DWG
AR	25.0202	AE-25.0202	TREND	COND	CONDUCTIVITY INSTRUMENT	10024A1025N2516.DWG
FAH	25.0202	FE-25.0202	ALARM		VENTURI FLOW METER	10024A1025N2516.DWG
FAL	25.0202	FE-25.0202	ALARM		VENTURI FLOW METER	10024A1025N2516.DWG
FI	25.0202	FE-25.0202	NUM		VENTURI FLOW METER	10024A1025N2516.DWG
FQI	25.0202	FE-25.0202	NUM		VENTURI FLOW METER	10024A1025N2516.DWG
FR	25.0202	FE-25.0202	TREND		VENTURI FLOW METER	10024A1025N2516.DWG
PAH	25.0202	PE-25.0202	ALARM		PRESSURE TRANSMITTER	10024A1025N2516.DWG
PAL	25.0202	PE-25.0202	ALARM		PRESSURE TRANSMITTER	10024A1025N2516.DWG
PI	25.0202	PE-25.0202	NUM		PRESSURE TRANSMITTER	10024A1025N2516.DWG
PR	25.0202	PE-25.0202	TREND		PRESSURE TRANSMITTER	10024A1025N2516.DWG
QAH	25.0202	AE-25.0202	SP	COND	CONDUCTIVITY INSTRUMENT	10024A1025N2516.DWG
QAL	25.0202	AE-25.0202	SP	COND	CONDUCTIVITY INSTRUMENT	10024A1025N2516.DWG
QFH	25.0202	FE-25.0202	SP		VENTURI FLOW METER	10024A1025N2516.DWG
QFL	25.0202	FE-25.0202	SP		VENTURI FLOW METER	10024A1025N2516.DWG
QPH	25.0202	PE-25.0202	SP		PRESSURE TRANSMITTER	10024A1025N2516.DWG
QPL	25.0202	PE-25.0202	SP		PRESSURE TRANSMITTER	10024A1025N2516.DWG
AAH	25.0203A	AE-25.0203A	ALARM	COND	CONDUCTIVITY INSTRUMENT	10024A1025N2518.DWG
AAL	25.0203A	AE-25.0203A	ALARM	COND	CONDUCTIVITY INSTRUMENT	10024A1025N2518.DWG
AI	25.0203A	AE-25.0203A	NUM	COND	CONDUCTIVITY INSTRUMENT	10024A1025N2518.DWG

HMI Listing

Tag	Loop	Equipment	Function	Description	Service	Drawing #
AR	25.0203A	AE-25.0203A	TREND	COND	CONDUCTIVITY INSTRUMENT	10024A1025N2518.DWG
FAH	25.0203A	FE-25.0203A	ALARM		VENTURI FLOW METER	10024A1025N2518.DWG
FAL	25.0203A	FE-25.0203A	ALARM		VENTURI FLOW METER	10024A1025N2518.DWG
FI	25.0203A	FE-25.0203A	NUM		VENTURI FLOW METER	10024A1025N2518.DWG
FQI	25.0203A	FE-25.0203A	NUM		VENTURI FLOW METER	10024A1025N2518.DWG
FR	25.0203A	FE-25.0203A	TREND		VENTURI FLOW METER	10024A1025N2518.DWG
PAH	25.0203A	PE-25.0203A	ALARM		PRESSURE TRANSMITTER	10024A1025N2518.DWG
PAL	25.0203A	PE-25.0203A	ALARM		PRESSURE TRANSMITTER	10024A1025N2518.DWG
PI	25.0203A	PE-25.0203A	NUM		PRESSURE TRANSMITTER	10024A1025N2518.DWG
PR	25.0203A	PE-25.0203A	TREND		PRESSURE TRANSMITTER	10024A1025N2518.DWG
QAH	25.0203A	AE-25.0203A	SP	COND	CONDUCTIVITY INSTRUMENT	10024A1025N2518.DWG
QAL	25.0203A	AE-25.0203A	SP	COND	CONDUCTIVITY INSTRUMENT	10024A1025N2518.DWG
QFH	25.0203A	FE-25.0203A	SP		VENTURI FLOW METER	10024A1025N2518.DWG
QFL	25.0203A	FE-25.0203A	SP		VENTURI FLOW METER	10024A1025N2518.DWG
QPH	25.0203A	PE-25.0203A	SP		PRESSURE TRANSMITTER	10024A1025N2518.DWG
QPL	25.0203A	PE-25.0203A	SP		PRESSURE TRANSMITTER	10024A1025N2518.DWG
AAH	25.0203B	AE-25.0203B	ALARM	COND	CONDUCTIVITY INSTRUMENT	10024A1025N2518.DWG
AAL	25.0203B	AE-25.0203B	ALARM	COND	CONDUCTIVITY INSTRUMENT	10024A1025N2518.DWG
AI	25.0203B	AE-25.0203B	NUM	COND	CONDUCTIVITY INSTRUMENT	10024A1025N2518.DWG
AR	25.0203B	AE-25.0203B	TREND	COND	CONDUCTIVITY INSTRUMENT	10024A1025N2518.DWG
PAH	25.0203B	PE-25.0203B	ALARM		PRESSURE TRANSMITTER	10024A1025N2518.DWG
PAL	25.0203B	PE-25.0203B	ALARM		PRESSURE TRANSMITTER	10024A1025N2518.DWG
PI	25.0203B	PE-25.0203B	NUM		PRESSURE TRANSMITTER	10024A1025N2518.DWG
PR	25.0203B	PE-25.0203B	TREND		PRESSURE TRANSMITTER	10024A1025N2518.DWG
QAH	25.0203B	AE-25.0203B	SP	COND	CONDUCTIVITY INSTRUMENT	10024A1025N2518.DWG
QAL	25.0203B	AE-25.0203B	SP	COND	CONDUCTIVITY INSTRUMENT	10024A1025N2518.DWG
QPH	25.0203B	PE-25.0203B	SP		PRESSURE TRANSMITTER	10024A1025N2518.DWG

HMI Listing

Tag	Loop	Equipment	Function	Description	Service	Drawing #
QPL	25.0203B	PE-25.0203B	SP		PRESSURE TRANSMITTER	10024A1025N2518.DWG
AAH	25.0203C	AE-25.0203C	ALARM	COND	CONDUCTIVITY INSTRUMENT	10024A1025N2518.DWG
AAL	25.0203C	AE-25.0203C	ALARM	COND	CONDUCTIVITY INSTRUMENT	10024A1025N2518.DWG
AI	25.0203C	AE-25.0203C	NUM	COND	CONDUCTIVITY INSTRUMENT	10024A1025N2518.DWG
AR	25.0203C	AE-25.0203C	TREND	COND	CONDUCTIVITY INSTRUMENT	10024A1025N2518.DWG
FAH	25.0203C	FE-25.0203C	ALARM		VENTURI FLOW METER	10024A1025N2518.DWG
FAL	25.0203C	FE-25.0203C	ALARM		VENTURI FLOW METER	10024A1025N2518.DWG
FI	25.0203C	FE-25.0203C	NUM		VENTURI FLOW METER	10024A1025N2518.DWG
FQI	25.0203C	FE-25.0203C	NUM		VENTURI FLOW METER	10024A1025N2518.DWG
FR	25.0203C	FE-25.0203C	TREND		VENTURI FLOW METER	10024A1025N2518.DWG
QAH	25.0203C	AE-25.0203C	SP	COND	CONDUCTIVITY INSTRUMENT	10024A1025N2518.DWG
QAL	25.0203C	AE-25.0203C	SP	COND	CONDUCTIVITY INSTRUMENT	10024A1025N2518.DWG
QFH	25.0203C	FE-25.0203C	SP		VENTURI FLOW METER	10024A1025N2518.DWG
QFL	25.0203C	FE-25.0203C	SP		VENTURI FLOW METER	10024A1025N2518.DWG
FAL	25.0204	FE-25.0204	ALARM	FLOW	THERMAL FLOW SWITCH	10024A1025N2517.DWG
PAL	25.0204	PE-25.0204	ALARM	PRESS	PRESSURE SWITCH LOW	10024A1025N2517.DWG
PAH	25.0204B	PE-25.0204B	ALARM		PRESSURE TRANSMITTER	10024A1025N2517.DWG
PAL	25.0204B	PE-25.0204B	ALARM		PRESSURE TRANSMITTER	10024A1025N2517.DWG
PI	25.0204B	PE-25.0204B	NUM		PRESSURE TRANSMITTER	10024A1025N2517.DWG
PR	25.0204B	PE-25.0204B	TREND		PRESSURE TRANSMITTER	10024A1025N2517.DWG
QPH	25.0204B	PE-25.0204B	SP		PRESSURE TRANSMITTER	10024A1025N2517.DWG
QPL	25.0204B	PE-25.0204B	SP		PRESSURE TRANSMITTER	10024A1025N2517.DWG
FAL	25.0301	FE-25.0301	ALARM	FLOW	THERMAL FLOW SWITCH	10024A1025N2520.DWG
PAL	25.0301	PE-25.0301	ALARM		PRESSURE TRANSMITTER	10024A1025N2520.DWG
AAH	25.0302	AE-25.0302	ALARM	COND	CONDUCTIVITY INSTRUMENT	10024A1025N2521.DWG
AAL	25.0302	AE-25.0302	ALARM	COND	CONDUCTIVITY INSTRUMENT	10024A1025N2521.DWG
AI	25.0302	AE-25.0302	NUM	COND	CONDUCTIVITY INSTRUMENT	10024A1025N2521.DWG

HMI Listing

Tag	Loop	Equipment	Function	Description	Service	Drawing #
AR	25.0302	AE-25.0302	TREND	COND	CONDUCTIVITY INSTRUMENT	10024A1025N2521.DWG
FAH	25.0302	FE-25.0302	ALARM		VENTURI FLOW METER	10024A1025N2521.DWG
FAL	25.0302	FE-25.0302	ALARM		VENTURI FLOW METER	10024A1025N2521.DWG
FI	25.0302	FE-25.0302	NUM		VENTURI FLOW METER	10024A1025N2521.DWG
FQI	25.0302	FE-25.0302	NUM		VENTURI FLOW METER	10024A1025N2521.DWG
FR	25.0302	FE-25.0302	TREND		VENTURI FLOW METER	10024A1025N2521.DWG
PAH	25.0302	PE-25.0302	ALARM		PRESSURE TRANSMITTER	10024A1025N2521.DWG
PAL	25.0302	PE-25.0302	ALARM		PRESSURE TRANSMITTER	10024A1025N2521.DWG
PI	25.0302	PE-25.0302	NUM		PRESSURE TRANSMITTER	10024A1025N2521.DWG
PR	25.0302	PE-25.0302	TREND		PRESSURE TRANSMITTER	10024A1025N2521.DWG
QAH	25.0302	AE-25.0302	SP	COND	CONDUCTIVITY INSTRUMENT	10024A1025N2521.DWG
QAL	25.0302	AE-25.0302	SP	COND	CONDUCTIVITY INSTRUMENT	10024A1025N2521.DWG
QFH	25.0302	FE-25.0302	SP		VENTURI FLOW METER	10024A1025N2521.DWG
QFL	25.0302	FE-25.0302	SP		VENTURI FLOW METER	10024A1025N2521.DWG
QPH	25.0302	PE-25.0302	SP		PRESSURE TRANSMITTER	10024A1025N2521.DWG
QPL	25.0302	PE-25.0302	SP		PRESSURE TRANSMITTER	10024A1025N2521.DWG
AAH	25.0303A	AE-25.0303A	ALARM	COND	CONDUCTIVITY INSTRUMENT	10024A1025N2523.DWG
AAL	25.0303A	AE-25.0303A	ALARM	COND	CONDUCTIVITY INSTRUMENT	10024A1025N2523.DWG
AI	25.0303A	AE-25.0303A	NUM	COND	CONDUCTIVITY INSTRUMENT	10024A1025N2523.DWG
AR	25.0303A	AE-25.0303A	TREND	COND	CONDUCTIVITY INSTRUMENT	10024A1025N2523.DWG
FAH	25.0303A	FE-25.0303A	ALARM		VENTURI FLOW METER	10024A1025N2523.DWG
FAL	25.0303A	FE-25.0303A	ALARM		VENTURI FLOW METER	10024A1025N2523.DWG
FI	25.0303A	FE-25.0303A	NUM		VENTURI FLOW METER	10024A1025N2523.DWG
FQI	25.0303A	FE-25.0303A	NUM		VENTURI FLOW METER	10024A1025N2523.DWG
FR	25.0303A	FE-25.0303A	TREND		VENTURI FLOW METER	10024A1025N2523.DWG
PAH	25.0303A	PE-25.0303A	ALARM		PRESSURE TRANSMITTER	10024A1025N2523.DWG
PAL	25.0303A	PE-25.0303A	ALARM		PRESSURE TRANSMITTER	10024A1025N2523.DWG

HMI Listing

Tag	Loop	Equipment	Function	Description	Service	Drawing #
PI	25.0303A	PE-25.0303A	NUM		PRESSURE TRANSMITTER	10024A1025N2523.DWG
PR	25.0303A	PE-25.0303A	TREND		PRESSURE TRANSMITTER	10024A1025N2523.DWG
QAH	25.0303A	AE-25.0303A	SP	COND	CONDUCTIVITY INSTRUMENT	10024A1025N2523.DWG
QAL	25.0303A	AE-25.0303A	SP	COND	CONDUCTIVITY INSTRUMENT	10024A1025N2523.DWG
QFH	25.0303A	FE-25.0303A	SP		VENTURI FLOW METER	10024A1025N2523.DWG
QFL	25.0303A	FE-25.0303A	SP		VENTURI FLOW METER	10024A1025N2523.DWG
QPH	25.0303A	PE-25.0303A	SP		PRESSURE TRANSMITTER	10024A1025N2523.DWG
QPL	25.0303A	PE-25.0303A	SP		PRESSURE TRANSMITTER	10024A1025N2523.DWG
AAH	25.0303B	AE-25.0303B	ALARM	COND	CONDUCTIVITY INSTRUMENT	10024A1025N2523.DWG
AAL	25.0303B	AE-25.0303B	ALARM	COND	CONDUCTIVITY INSTRUMENT	10024A1025N2523.DWG
AI	25.0303B	AE-25.0303B	NUM	COND	CONDUCTIVITY INSTRUMENT	10024A1025N2523.DWG
AR	25.0303B	AE-25.0303B	TREND	COND	CONDUCTIVITY INSTRUMENT	10024A1025N2523.DWG
PAH	25.0303B	PE-25.0303B	ALARM		PRESSURE TRANSMITTER	10024A1025N2523.DWG
PAL	25.0303B	PE-25.0303B	ALARM		PRESSURE TRANSMITTER	10024A1025N2523.DWG
PI	25.0303B	PE-25.0303B	NUM		PRESSURE TRANSMITTER	10024A1025N2523.DWG
PR	25.0303B	PE-25.0303B	TREND		PRESSURE TRANSMITTER	10024A1025N2523.DWG
QAH	25.0303B	AE-25.0303B	SP	COND	CONDUCTIVITY INSTRUMENT	10024A1025N2523.DWG
QAL	25.0303B	AE-25.0303B	SP	COND	CONDUCTIVITY INSTRUMENT	10024A1025N2523.DWG
QPH	25.0303B	PE-25.0303B	SP		PRESSURE TRANSMITTER	10024A1025N2523.DWG
QPL	25.0303B	PE-25.0303B	SP		PRESSURE TRANSMITTER	10024A1025N2523.DWG
AAH	25.0303C	AE-25.0303C	ALARM	COND	CONDUCTIVITY INSTRUMENT	10024A1025N2523.DWG
AAL	25.0303C	AE-25.0303C	ALARM	COND	CONDUCTIVITY INSTRUMENT	10024A1025N2523.DWG
AI	25.0303C	AE-25.0303C	NUM	COND	CONDUCTIVITY INSTRUMENT	10024A1025N2523.DWG
AR	25.0303C	AE-25.0303C	TREND	COND	CONDUCTIVITY INSTRUMENT	10024A1025N2523.DWG
FAH	25.0303C	FE-25.0303C	ALARM		VENTURI FLOW METER	10024A1025N2523.DWG
FAL	25.0303C	FE-25.0303C	ALARM		VENTURI FLOW METER	10024A1025N2523.DWG
FI	25.0303C	FE-25.0303C	NUM		VENTURI FLOW METER	10024A1025N2523.DWG

Tag	Loop	Equipment	Function	Description	Service	Drawing #
FQI	25.0303C	FE-25.0303C	NUM		VENTURI FLOW METER	10024A1025N2523.DWG
FR	25.0303C	FE-25.0303C	TREND		VENTURI FLOW METER	10024A1025N2523.DWG
QAH	25.0303C	AE-25.0303C	SP	COND	CONDUCTIVITY INSTRUMENT	10024A1025N2523.DWG
QAL	25.0303C	AE-25.0303C	SP	COND	CONDUCTIVITY INSTRUMENT	10024A1025N2523.DWG
QFH	25.0303C	FE-25.0303C	SP		VENTURI FLOW METER	10024A1025N2523.DWG
QFL	25.0303C	FE-25.0303C	SP		VENTURI FLOW METER	10024A1025N2523.DWG
FAL	25.0304	FE-25.0304	ALARM	FLOW	THERMAL FLOW SWITCH	10024A1025N2522.DWG
PAL	25.0304	PE-25.0304	ALARM	PRESS	PRESSURE SWITCH LOW	10024A1025N2522.DWG
PAH	25.0304A	PE-25.0304A	ALARM		PRESSURE TRANSMITTER	10024A1025N2522.DWG
PAL	25.0304A	PE-25.0304A	ALARM		PRESSURE TRANSMITTER	10024A1025N2522.DWG
PI	25.0304A	PE-25.0304A	NUM		PRESSURE TRANSMITTER	10024A1025N2522.DWG
PR	25.0304A	PE-25.0304A	TREND		PRESSURE TRANSMITTER	10024A1025N2522.DWG
QPH	25.0304A	PE-25.0304A	SP		PRESSURE TRANSMITTER	10024A1025N2522.DWG
QPL	25.0304A	PE-25.0304A	SP		PRESSURE TRANSMITTER	10024A1025N2522.DWG
PAH	25.0304B	PE-25.0304B	ALARM		PRESSURE TRANSMITTER	10024A1025N2522.DWG
PAL	25.0304B	PE-25.0304B	ALARM		PRESSURE TRANSMITTER	10024A1025N2522.DWG
PI	25.0304B	PE-25.0304B	NUM		PRESSURE TRANSMITTER	10024A1025N2522.DWG
PR	25.0304B	PE-25.0304B	TREND		PRESSURE TRANSMITTER	10024A1025N2522.DWG
QPH	25.0304B	PE-25.0304B	SP		PRESSURE TRANSMITTER	10024A1025N2522.DWG
QPL	25.0304B	PE-25.0304B	SP		PRESSURE TRANSMITTER	10024A1025N2522.DWG
AAH	25.0402	AE-25.0402	ALARM	COND	CONDUCTIVITY INSTRUMENT	10024A1025N2526.DWG
AAL	25.0402	AE-25.0402	ALARM	COND	CONDUCTIVITY INSTRUMENT	10024A1025N2526.DWG
AI	25.0402	AE-25.0402	NUM	COND	CONDUCTIVITY INSTRUMENT	10024A1025N2526.DWG
AR	25.0402	AE-25.0402	TREND	COND	CONDUCTIVITY INSTRUMENT	10024A1025N2526.DWG
FAH	25.0402	FE-25.0402	ALARM		VENTURI FLOW METER	10024A1025N2526.DWG
FAL	25.0402	FE-25.0402	ALARM		VENTURI FLOW METER	10024A1025N2526.DWG
FI	25.0402	FE-25.0402	NUM		VENTURI FLOW METER	10024A1025N2526.DWG

HMI Listing

Tag	Loop	Equipment	Function	Description	Service	Drawing #
FQI	25.0402	FE-25.0402	NUM		VENTURI FLOW METER	10024A1025N2526.DWG
FR	25.0402	FE-25.0402	TREND		VENTURI FLOW METER	10024A1025N2526.DWG
PAH	25.0402	PE-25.0402	ALARM		PRESSURE TRANSMITTER	10024A1025N2526.DWG
PAL	25.0402	PE-25.0402	ALARM		PRESSURE TRANSMITTER	10024A1025N2526.DWG
PI	25.0402	PE-25.0402	NUM		PRESSURE TRANSMITTER	10024A1025N2526.DWG
PR	25.0402	PE-25.0402	TREND		PRESSURE TRANSMITTER	10024A1025N2526.DWG
QAH	25.0402	AE-25.0402	SP	COND	CONDUCTIVITY INSTRUMENT	10024A1025N2526.DWG
QAL	25.0402	AE-25.0402	SP	COND	CONDUCTIVITY INSTRUMENT	10024A1025N2526.DWG
QFH	25.0402	FE-25.0402	SP		VENTURI FLOW METER	10024A1025N2526.DWG
QFL	25.0402	FE-25.0402	SP		VENTURI FLOW METER	10024A1025N2526.DWG
QPH	25.0402	PE-25.0402	SP		PRESSURE TRANSMITTER	10024A1025N2526.DWG
QPL	25.0402	PE-25.0402	SP		PRESSURE TRANSMITTER	10024A1025N2526.DWG
AAH	25.0403A	AE-25.0403A	ALARM	COND	CONDUCTIVITY INSTRUMENT	10024A1025N2528.DWG
AAL	25.0403A	AE-25.0403A	ALARM	COND	CONDUCTIVITY INSTRUMENT	10024A1025N2528.DWG
AI	25.0403A	AE-25.0403A	NUM	COND	CONDUCTIVITY INSTRUMENT	10024A1025N2528.DWG
AR	25.0403A	AE-25.0403A	TREND	COND	CONDUCTIVITY INSTRUMENT	10024A1025N2528.DWG
FAH	25.0403A	FE-25.0403A	ALARM		VENTURI FLOW METER	10024A1025N2528.DWG
FAL	25.0403A	FE-25.0403A	ALARM		VENTURI FLOW METER	10024A1025N2528.DWG
FI	25.0403A	FE-25.0403A	NUM		VENTURI FLOW METER	10024A1025N2528.DWG
FQI	25.0403A	FE-25.0403A	NUM		VENTURI FLOW METER	10024A1025N2528.DWG
FR	25.0403A	FE-25.0403A	TREND		VENTURI FLOW METER	10024A1025N2528.DWG
PAH	25.0403A	PE-25.0403A	ALARM		PRESSURE TRANSMITTER	10024A1025N2528.DWG
PAL	25.0403A	PE-25.0403A	ALARM		PRESSURE TRANSMITTER	10024A1025N2528.DWG
PI	25.0403A	PE-25.0403A	NUM		PRESSURE TRANSMITTER	10024A1025N2528.DWG
PR	25.0403A	PE-25.0403A	TREND		PRESSURE TRANSMITTER	10024A1025N2528.DWG
QAH	25.0403A	AE-25.0403A	SP	COND	CONDUCTIVITY INSTRUMENT	10024A1025N2528.DWG
QAL	25.0403A	AE-25.0403A	SP	COND	CONDUCTIVITY INSTRUMENT	10024A1025N2528.DWG

HMI Listing

Tag	Loop	Equipment	Function	Description	Service	Drawing #
QFH	25.0403A	FE-25.0403A	SP		VENTURI FLOW METER	10024A1025N2528.DWG
QFL	25.0403A	FE-25.0403A	SP		VENTURI FLOW METER	10024A1025N2528.DWG
QPH	25.0403A	PE-25.0403A	SP		PRESSURE TRANSMITTER	10024A1025N2528.DWG
QPL	25.0403A	PE-25.0403A	SP		PRESSURE TRANSMITTER	10024A1025N2528.DWG
AAH	25.0403B	AE-25.0403B	ALARM	COND	CONDUCTIVITY INSTRUMENT	10024A1025N2528.DWG
AAL	25.0403B	AE-25.0403B	ALARM	COND	CONDUCTIVITY INSTRUMENT	10024A1025N2528.DWG
AI	25.0403B	AE-25.0403B	NUM	COND	CONDUCTIVITY INSTRUMENT	10024A1025N2528.DWG
AR	25.0403B	AE-25.0403B	TREND	COND	CONDUCTIVITY INSTRUMENT	10024A1025N2528.DWG
PAH	25.0403B	PE-25.0403B	ALARM		PRESSURE TRANSMITTER	10024A1025N2528.DWG
PAL	25.0403B	PE-25.0403B	ALARM		PRESSURE TRANSMITTER	10024A1025N2528.DWG
PI	25.0403B	PE-25.0403B	NUM		PRESSURE TRANSMITTER	10024A1025N2528.DWG
PR	25.0403B	PE-25.0403B	TREND		PRESSURE TRANSMITTER	10024A1025N2528.DWG
QAH	25.0403B	AE-25.0403B	SP	COND	CONDUCTIVITY INSTRUMENT	10024A1025N2528.DWG
QAL	25.0403B	AE-25.0403B	SP	COND	CONDUCTIVITY INSTRUMENT	10024A1025N2528.DWG
QPH	25.0403B	PE-25.0403B	SP		PRESSURE TRANSMITTER	10024A1025N2528.DWG
QPL	25.0403B	PE-25.0403B	SP		PRESSURE TRANSMITTER	10024A1025N2528.DWG
AAH	25.0403C	AE-25.0403C	ALARM	COND	CONDUCTIVITY INSTRUMENT	10024A1025N2528.DWG
AAL	25.0403C	AE-25.0403C	ALARM	COND	CONDUCTIVITY INSTRUMENT	10024A1025N2528.DWG
AI	25.0403C	AE-25.0403C	NUM	COND	CONDUCTIVITY INSTRUMENT	10024A1025N2528.DWG
AR	25.0403C	AE-25.0403C	TREND	COND	CONDUCTIVITY INSTRUMENT	10024A1025N2528.DWG
FAH	25.0403C	FE-25.0403C	ALARM		VENTURI FLOW METER	10024A1025N2528.DWG
FAL	25.0403C	FE-25.0403C	ALARM		VENTURI FLOW METER	10024A1025N2528.DWG
FI	25.0403C	FE-25.0403C	NUM		VENTURI FLOW METER	10024A1025N2528.DWG
FQI	25.0403C	FE-25.0403C	NUM		VENTURI FLOW METER	10024A1025N2528.DWG
FR	25.0403C	FE-25.0403C	TREND		VENTURI FLOW METER	10024A1025N2528.DWG
QAH	25.0403C	AE-25.0403C	SP	COND	CONDUCTIVITY INSTRUMENT	10024A1025N2528.DWG
QAL	25.0403C	AE-25.0403C	SP	COND	CONDUCTIVITY INSTRUMENT	10024A1025N2528.DWG

HMI Listing

Tag	Loop	Equipment	Function	Description	Service	Drawing #
QFH	25.0403C	FE-25.0403C	SP		VENTURI FLOW METER	10024A1025N2528.DWG
QFL	25.0403C	FE-25.0403C	SP		VENTURI FLOW METER	10024A1025N2528.DWG
LAH	25.0903	LE-25.0903	ALARM		LEVEL TRANSMITTER	10024A1025N2534.DWG
LAL	25.0903	LE-25.0903	ALARM		LEVEL TRANSMITTER	10024A1025N2534.DWG
LI	25.0903	LE-25.0903	NUM		LEVEL TRANSMITTER	10024A1025N2534.DWG
LR	25.0903	LE-25.0903	TREND		LEVEL TRANSMITTER	10024A1025N2534.DWG
QLH	25.0903	LE-25.0903	SP		LEVEL TRANSMITTER	10024A1025N2534.DWG
QLL	25.0903	LE-25.0903	SP		LEVEL TRANSMITTER	10024A1025N2534.DWG
PAH	25.204A	PE-25.204A	ALARM		PRESSURE TRANSMITTER	10024A1025N2517.DWG
PAL	25.204A	PE-25.204A	ALARM		PRESSURE TRANSMITTER	10024A1025N2517.DWG
PI	25.204A	PE-25.204A	NUM		PRESSURE TRANSMITTER	10024A1025N2517.DWG
PR	25.204A	PE-25.204A	TREND		PRESSURE TRANSMITTER	10024A1025N2517.DWG
QPH	25.204A	PE-25.204A	SP		PRESSURE TRANSMITTER	10024A1025N2517.DWG
QPL	25.204A	PE-25.204A	SP		PRESSURE TRANSMITTER	10024A1025N2517.DWG
DI	65.0201	FE-65.0201	DENSITY		\HSO3 METERING PUMPS DISCHARGE FLOW TRANSMITTI	10024A1025N6501.DWG
DI	65.0201	FE-65.0201	DENSITY		NaHSO3 SHOWER & EYEWASH FLOW SWITCH	10024A1025N6501.DWG
FAH	65.0201	FE-65.0201	ALARM	FLOW	NaHSO3 SHOWER & EYEWASH FLOW SWITCH	10024A1025N6501.DWG
FAH	65.0201	FE-65.0201	ALARM		\HSO3 METERING PUMPS DISCHARGE FLOW TRANSMITTI	10024A1025N6501.DWG
FAH	65.0201	FE-65.0201	ALARM		NaHSO3 SHOWER & EYEWASH FLOW SWITCH	10024A1025N6501.DWG
FAH	65.0201	FE-65.0201	ALARM	FLOW	\HSO3 METERING PUMPS DISCHARGE FLOW TRANSMITTI	10024A1025N6501.DWG
FAL	65.0201	FE-65.0201	ALARM		\HSO3 METERING PUMPS DISCHARGE FLOW TRANSMITTI	10024A1025N6501.DWG
FAL	65.0201	FE-65.0201	ALARM		NaHSO3 SHOWER & EYEWASH FLOW SWITCH	10024A1025N6501.DWG
FI	65.0201	FE-65.0201	MASS/VOL		\HSO3 METERING PUMPS DISCHARGE FLOW TRANSMITTI	10024A1025N6501.DWG
FI	65.0201	FE-65.0201	MASS/VOL		NaHSO3 SHOWER & EYEWASH FLOW SWITCH	10024A1025N6501.DWG
FQI	65.0201	FE-65.0201	MASS/VOL		\HSO3 METERING PUMPS DISCHARGE FLOW TRANSMITTI	10024A1025N6501.DWG
FQI	65.0201	FE-65.0201	MASS/VOL		NaHSO3 SHOWER & EYEWASH FLOW SWITCH	10024A1025N6501.DWG
FR	65.0201	FE-65.0201	TREND		\HSO3 METERING PUMPS DISCHARGE FLOW TRANSMITTI	10024A1025N6501.DWG

HMI Listing

Tag	Loop	Equipment	Function	Description	Service	Drawing #
FR	65.0201	FE-65.0201	TREND		NaHSO3 SHOWER & EYEWASH FLOW SWITCH	10024A1025N6501.DWG
QAH	65.0201	WE-65.0201	SP	WEIGHT	NaHSO3 STORAGE TOTE NO. 1 WEIGHT TRANSMITTER	10024A1025N6501.DWG
QFH	65.0201	FE-65.0201	SP		NaHSO3 SHOWER & EYEWASH FLOW SWITCH	10024A1025N6501.DWG
QFH	65.0201	FE-65.0201	SP		\HSO3 METERING PUMPS DISCHARGE FLOW TRANSMITTI	10024A1025N6501.DWG
QFL	65.0201	FE-65.0201	SP		NaHSO3 SHOWER & EYEWASH FLOW SWITCH	10024A1025N6501.DWG
QFL	65.0201	FE-65.0201	SP		\HSO3 METERING PUMPS DISCHARGE FLOW TRANSMITTI	10024A1025N6501.DWG
TI	65.0201	FE-65.0201	TEMP		NaHSO3 SHOWER & EYEWASH FLOW SWITCH	10024A1025N6501.DWG
TI	65.0201	FE-65.0201	TEMP		\HSO3 METERING PUMPS DISCHARGE FLOW TRANSMITTI	10024A1025N6501.DWG
WAL	65.0201	WE-65.0201	SP	WEIGHT	NaHSO3 STORAGE TOTE NO. 1 WEIGHT TRANSMITTER	10024A1025N6501.DWG
WI	65.0201	WE-65.0201	NUM	WEIGHT	NaHSO3 STORAGE TOTE NO. 1 WEIGHT TRANSMITTER	10024A1025N6501.DWG
WR	65.0201	WE-65.0201	TREND	WEIGHT	NaHSO3 STORAGE TOTE NO. 1 WEIGHT TRANSMITTER	10024A1025N6501.DWG
DI	66.0801	FE-66.0801	DENSITY		2SO4 METERING PUMPS DISCHARGE FLOW TRANSMITTE	10024A1025N6604.DWG
DI	66.0801	FE-66.0801	DENSITY		-2SO4 EMERGENCY SHOWER & EYEWASH FLOW SWITCH	10024A1025N6604.DWG
FI	66.0801	FE-66.0801	MASS/VOL		2SO4 METERING PUMPS DISCHARGE FLOW TRANSMITTE	10024A1025N6604.DWG
FI	66.0801	FE-66.0801	MASS/VOL		-2SO4 EMERGENCY SHOWER & EYEWASH FLOW SWITCH	10024A1025N6604.DWG
FQI	66.0801	FE-66.0801	MASS/VOL		-2SO4 EMERGENCY SHOWER & EYEWASH FLOW SWITCH	10024A1025N6604.DWG
FQI	66.0801	FE-66.0801	MASS/VOL		2SO4 METERING PUMPS DISCHARGE FLOW TRANSMITTE	10024A1025N6604.DWG
TI	66.0801	FE-66.0801	TEMP		2SO4 METERING PUMPS DISCHARGE FLOW TRANSMITTE	10024A1025N6604.DWG
TI	66.0801	FE-66.0801	TEMP		-2SO4 EMERGENCY SHOWER & EYEWASH FLOW SWITCH	10024A1025N6604.DWG
DI	66.0802	FE-66.0802	DENSITY		2SO4 METERING PUMPS DISCHARGE FLOW TRANSMITTE	10024A1025N6604.DWG
FI	66.0802	FE-66.0802	MASS/VOL		2SO4 METERING PUMPS DISCHARGE FLOW TRANSMITTE	10024A1025N6604.DWG
FQI	66.0802	FE-66.0802	MASS/VOL		2SO4 METERING PUMPS DISCHARGE FLOW TRANSMITTE	10024A1025N6604.DWG
TI	66.0802	FE-66.0802	TEMP		2SO4 METERING PUMPS DISCHARGE FLOW TRANSMITTE	10024A1025N6604.DWG
DI	66.0804	FE-66.0804	DENSITY		2SO4 METERING PUMPS DISCHARGE FLOW TRANSMITTE	10024A1025N6602.DWG
FI	66.0804	FE-66.0804	MASS/VOL		2SO4 METERING PUMPS DISCHARGE FLOW TRANSMITTE	10024A1025N6602.DWG
FQI	66.0804	FE-66.0804	MASS/VOL		2SO4 METERING PUMPS DISCHARGE FLOW TRANSMITTE	10024A1025N6602.DWG
TI	66.0804	FE-66.0804	TEMP		2SO4 METERING PUMPS DISCHARGE FLOW TRANSMITTE	10024A1025N6602.DWG

HMI Listing

Tag	Loop	Equipment	Function	Description	Service	Drawing #
LAH	66.0806A	LE-66.0806A	ALARM		LEVEL INDICATING TRANSMITTER	10024A1025N6603.DWG
LAL	66.0806A	LE-66.0806A	ALARM		LEVEL INDICATING TRANSMITTER	10024A1025N6603.DWG
LI	66.0806A	LE-66.0806A	NUM		LEVEL INDICATING TRANSMITTER	10024A1025N6603.DWG
LR	66.0806A	LE-66.0806A	TREND		LEVEL INDICATING TRANSMITTER	10024A1025N6603.DWG
QLH	66.0806A	LE-66.0806A	SP		LEVEL INDICATING TRANSMITTER	10024A1025N6603.DWG
QLL	66.0806A	LE-66.0806A	SP		LEVEL INDICATING TRANSMITTER	10024A1025N6603.DWG
DI	66.0901	FE-66.0901	DENSITY		ACL2 METERING PUMPS DISCHARGE FLOW TRANSMITTE	10024A1025N6606.DWG
DI	66.0901	FE-66.0901	DENSITY		CaCl2 EMERGENCY SHOWER & EYEWASH FLOW SWITCH	10024A1025N6606.DWG
FI	66.0901	FE-66.0901	MASS/VOL		ACL2 METERING PUMPS DISCHARGE FLOW TRANSMITTE	10024A1025N6606.DWG
FI	66.0901	FE-66.0901	MASS/VOL		CaCl2 EMERGENCY SHOWER & EYEWASH FLOW SWITCH	10024A1025N6606.DWG
FQI	66.0901	FE-66.0901	MASS/VOL		ACL2 METERING PUMPS DISCHARGE FLOW TRANSMITTE	10024A1025N6606.DWG
FQI	66.0901	FE-66.0901	MASS/VOL		CaCl2 EMERGENCY SHOWER & EYEWASH FLOW SWITCH	10024A1025N6606.DWG
TI	66.0901	FE-66.0901	TEMP		ACL2 METERING PUMPS DISCHARGE FLOW TRANSMITTE	10024A1025N6606.DWG
TI	66.0901	FE-66.0901	TEMP		CaCl2 EMERGENCY SHOWER & EYEWASH FLOW SWITCH	10024A1025N6606.DWG
DI	69.0101	FE-69.0101	DENSITY		DISCHARGE FLOW TRANSMITTER	10024A1025N6901.DWG
FI	69.0101	FE-69.0101	MASS/VOL		DISCHARGE FLOW TRANSMITTER	10024A1025N6901.DWG
FQI	69.0101	FE-69.0101	MASS/VOL		DISCHARGE FLOW TRANSMITTER	10024A1025N6901.DWG
TI	69.0101	FE-69.0101	TEMP		DISCHARGE FLOW TRANSMITTER	10024A1025N6901.DWG
PDAH	79.3001	PE-79.3001	ALARM		PRESSURE DIFFERENTIAL TRANSMITTER	10024A1021N7901.DWG
PDAH	79.3002	PE-79.3002	ALARM		PRESSURE DIFFERENTIAL TRANSMITTER	10024A1021N7901.DWG

Appendix A

Encroachment Permits

Caltrans (Submitted, under review)

BART (Submitted, under review)

UPRR (Submitted, under review)

City of Pittsburg (Application and Conditions Provided by City)

CITY OF PITTSBURG
COMMUNITY DEVELOPMENT DEPARTMENT
ENGINEERING DIVISION
CONSTRUCTION PERMIT APPLICATION

APPLICATION FOR: ☐ **ENCROACHMENT PERMIT** ☐ **GRADING PERMIT**

☐ **SINGLE PARCEL DEVELOPMENT** ☐ **SUBDIVISION IMPROVEMENTS**

JOB ADDRESS (STREET AND NAME)			**DATE**
PERMITTEE NAME			**PERMITEE TELEPHONE**
MAILING ADDRESS	**CITY**	**ZIP**	**CONTRACTOR TELEPHONE**
CONTRACTOR NAME			**STATE CONTRACTOR'S LICENSE #**
ADDRESS	**CITY**	**ZIP**	**CITY CONTRACT #**
APPROX. STARTING DATE	**APPROX. COMPLETION DATE**		
DESCRIPTION OF WORK	**CU. YDS OF EXCAVATION**		
	CU. YDS. OF FILL		

	ITEM	**EACH**	**QUANTITY**	**TOTAL**
	DRIVEWAY APPROACH	$672.00		
	SIDEWALK/CURB/GUTTER	$672.00		
	DRAINAGE/CONCRETE WORK ON PRIVATE PROPERTY	$672.00		
	NEW PATIO PAD	$672.00		
	SWIMMING POOLS	$672.00		
	GRADING	$672 MIN / 5.5% OF ENGINEERS ESTIMATE OR BY CUBIC YARDS – SEE FEE TABLE		
	ENCROACHMENT MINIMUM	$672 MIN.		
	ENCROACHMENT ENGINEER'S ESTIMATE	8% OF ENGINEERS ESTIMATE		
	RETAINING WALLS	$672 MIN./ 5.5% OF ENGINEERS ESTIMATE		
		TOTAL COST		

DATE:	APPROVED BY:	PERMIT NUMBER:

- This permit allows the applicant to perform such work as described herein and in accompanying plans at the location described above. All work shall be in accordance with the PITTSBURG MUNICIPAL CODE, STANDARD SPECIFICATIONS and STANDARD DETAILS and applicable codes. All plans shall be under the direction of and signed by a Registered Civil Engineer (unless otherwise directed) and approved by the City Engineer. The issuance of this permit is in accordance with the City of Pittsburg Municipal Code.

SIGNATURE OF PERMITTEE OR PERSON AUTHORIZED TO SIGN FOR PERMITTEE	**DATE**

TEMPORARY TRAFFIC CONTROL PLAN (TTCP) CHECKLIST

No traffic control may be implemented on City streets without City approval.

This checklist is provided to assist Developers and Contractors in developing acceptable Temporary Traffic Control Plans (TTCP's) for encroachments onto City right-of-way. Please refer to the California Manual of Uniform Traffic Control Devices (MUTCD), Part 6: Temporary Traffic Control, for basic information on preparing TTCP's and typical TTCP examples (www.dot.ca.gov/hq/traffops/signtech/mutcdsupp/ca_mutcd.htm).

Contractor is responsible for inspecting any approved traffic detour routes to insure adequate horizontal and vertical clearances are maintained from obstructions (e.g., poles and overhanging tree limbs).

Lane Closures

- ☐ Except for emergencies or unless otherwise specified:
  - ○ No lane closures will be allowed on weekdays from **6:00 AM** to **8:30 AM**, or from **3:30 PM** to **6:00 PM**.
  - ○ Two-lane closures and lane closures with reversible control will not be allowed on weekdays before **9:00 AM**, or after **3:00 PM.**

Road Closures

- ☐ Full road closures may only be used when no other types of temporary traffic control are feasible for the work involved.
- ☐ Detour routes and notification plans must be submitted to the City at least two weeks in advance.
- ☐ The road closure(s) must be limited in duration and area as practicable.

Construction Activity

- ☐ Show the exact location of the work zone and how it is to be protected (e.g., cones, barricades, k-rail) during construction.
- ☐ Show construction schedule, work hours, and all times TTCP will be in effect.
- ☐ Include details on construction activity and equipment being used within street right-of-way. Specify how the work area will be protected at night (e.g., trench plates).
- ☐ If work is to be done in phases, submit separate TTCP's for each phase of work.
- ☐ All detour signs must be removed or covered when detour is not in effect.

Traffic Control Devices

- ☐ Every roadside sign on the TTCP should include the MUTCD sign number, dimension and description.

Approved _____ 9/18/7
City Engineer R.C.E. 44181 Date

City of Pittsburg	No.	Date	Revision	Drawn by: Checked by: Date: 8-28-07 Scale: None	Standard Detail	Sheet 1 of 2
					Temporary Traffic Control Check List	T-10

- ☐ A Flashing Arrow Sign/Board (FAS) ***must*** be used for ***all*** lane/street closures, and for lane/street detours on the following streets. (Include size, panel display and exact location on the TTCP).

  - Railroad Avenue/Kirker Pass Road
  - Bailey Road
  - Somersville Road
  - Loveridge Road
  - West/East Leland Road
  - Buchanan Road
  - Power Avenue
  - Harbor Street
  - North Parkside Drive
  - Willow Pass Road
  - Pittsburg-Antioch Highway
  - California Avenue
  - Century Boulevard
  - West/East Tenth Street

- ☐ Flaggers should be identified where required and their position shown on the TTCP.

- ☐ Show dimensions and locations of all channelizing devices, warning lights, flag trees, and portable barriers on the TTCP. All devices must comply with California MUTCD.

Traffic Signal Operation and Equipment

- ☐ Include location of all traffic signals and traffic signal detection devices within the traffic control area.

- ☐ If special signal timing is required in the TTCP, specify **all** changes and their effects. This includes changing signal operations to flashing red, recall or fixed time.

Pedestrian/Bicycle Safety

- ☐ Pedestrians and bicyclists must have a safe route to walk/ride through and/or around the work area wherever practicable.

- ☐ Show all pedestrian/bicycle entries, detours, paths and exits on the TTCP.

- ☐ Clearly show description and location of all traffic control devices, including fences and barricades, within the pedestrian's/bicyclists safe route to walk/ride on the TTCP.

Parking Restrictions

- ☐ Parking restrictions must be clearly posted a minimum of 48 hours before work begins. Their implementation will be at the expense of the contractor/developer.

- ☐ All legal parking areas must be maintained unless signs are posted. Access to legally parked vehicles' doors and storage areas must also be maintained.

- ☐ Parking restrictions must be limited in time as practicable. Restrictions may only be used when there are no other types of traffic control feasible for the work involved, and parking demand can be reasonably accommodated.

Please contact the Traffic Engineering Division at (925) 252-4930 for any questions related to TTCP's, including closures, traffic signal operations, and temporary "No Parking" signs.

Please allow five (5) working days for the City to review the TTCP. Once the TTCP is approved it must be available for inspection on-site at all times. Should City staff on the job site find potential hazards with an approved TTCP, City may require changes to the TTCP to maintain safety.

Approved _____ 9/18/7
City Engineer R.C.E. 44181 Date

City of Pittsburg	No.	Date	Revision	Drawn by: Checked by: Date: 8-28-07 Scale: None	Standard Detail	Sheet 2 of 2
					Temporary Traffic Control Check List	T-10

Appendix J

Existing Tube Settlers and River Pump Station Reference Drawings

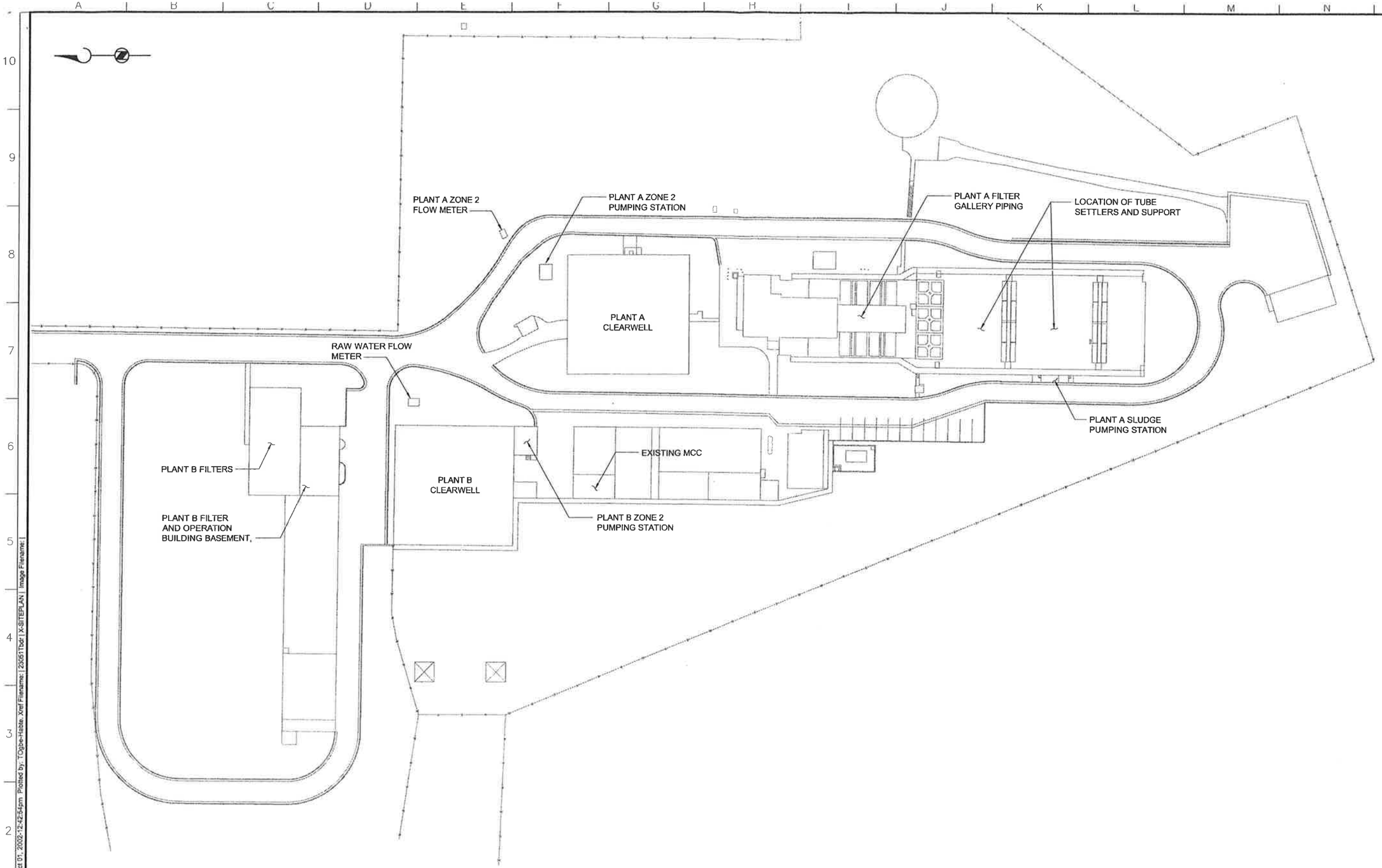

Filename: 23051-C10 Plot date: Oct 01, 2002-12:42:54pm Plotted by: TOgbe-Habte. Xref Filename: | 23051Tbdt | X-SITEPLAN | Image Filename: |

BROWN AND CALDWELL

SUBMITTED: _____ DATE: _____
PROJECT MANAGER
APPROVED: _____ DATE: _____
BROWN AND CALDWELL
APPROVED: _____ DATE: _____

LINE IS 2 INCHES AT FULL SIZE (IF NOT 2"–SCALE ACCORDINGLY)

FILE 23051-037
DRAWN TOH
DESIGNED AS
CHECKED
CHECKED

REVISIONS

ZONE	REV	DESCRIPTION	BY	DATE	APP

CITY OF ANTIOCH
CONTRA COSTA COUNTY, CALIFORNIA

WATER TREATMENT PLANT UPGRADE

SITE PLAN

KEY PLAN
TUBE SETTLERS AND SUPPORT

SCALE
1" = 40'-0

DRAWING NUMBER
C10

SHEET NUMBER
_ OF _

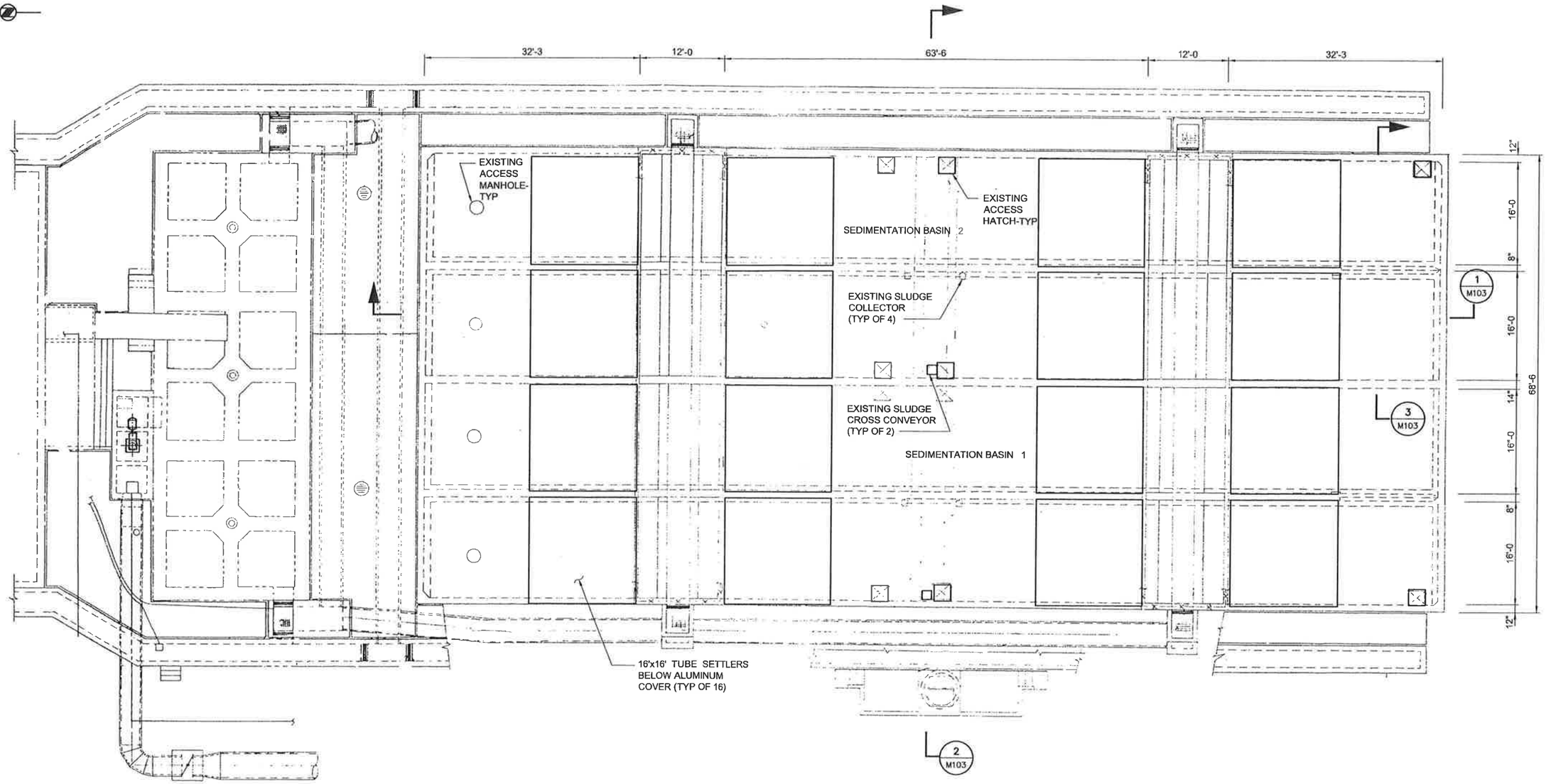

TOP PLAN

SCALE: 1/8" = 1'-0

Filename: 23051M102 Plot date: Oct 01, 2002-12:48:02pm Plotted by: TOgoe-Hatta Xref Filename: | 23051Tbdr | Image Filename: | SEDMBSN.tif |

BROWN AND CALDWELL

SUBMITTED: _____ DATE: _____
PROJECT MANAGER
APPROVED: _____ DATE: _____
BROWN AND CALDWELL
APPROVED: _____ DATE: _____

LINE IS 2 INCHES AT FULL SIZE (IF NOT 2"-SCALE ACCORDINGLY)

FILE 23051-037
DRAWN TOH
DESIGNED AS
CHECKED
CHECKED

PRELIMINARY

THIS DRAWING IS NOT VALID FOR CONSTRUCTION PURPOSES UNLESS IT BEARS THE SEAL AND SIGNATURE OF A DULY REGISTERED PROFESSIONAL

REVISIONS

ZONE	REV	DESCRIPTION	BY	DATE	APP

CITY OF ANTIOCH
CONTRA COSTA COUNTY, CALIFORNIA

WATER TREATMENT PLANT UPGRADE

PLANT A SEDIMENTATION BASINS 1 AND 2

TUBE SETTLERS AND SUPPORTS

SCALE AS SHOWN

DRAWING NUMBER **M102**

SHEET NUMBER _ OF _

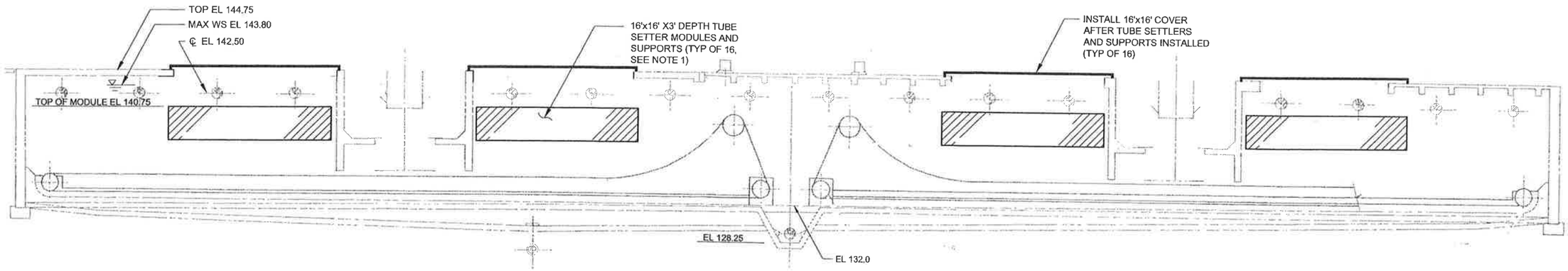

SECTION 1/M102

SCALE: 3/16" = 1'-0

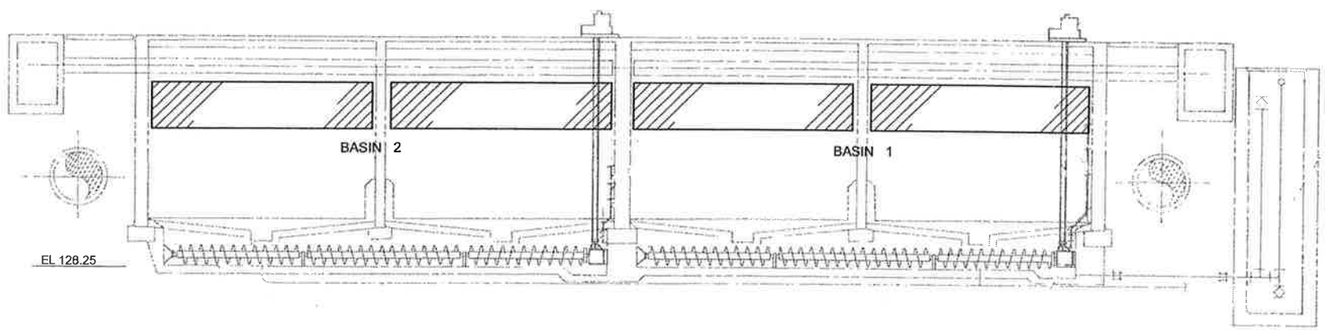

SECTION 2/M102

SCALE: 3/16" = 1'-0

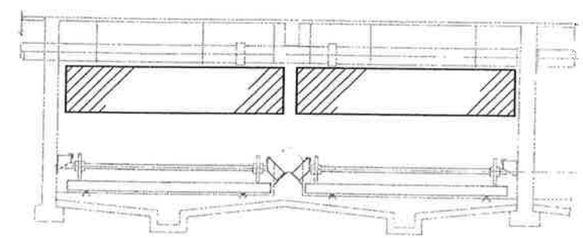

SECTION 3/M102

SCALE: 3/16" = 1'-0

NOTES:

1. CONTRACTOR TO REFER TO PRE-PURCHASED EQUIPMENT DRAWINGS FOR ADDITIONAL DETAILS ON TUBE SETTLER AND SUPPORT.

Filename: 23051M103 Plot date: Oct 01, 2002-09:01:06am Plotted by: TOgbe-Habte, Xref Filename: | 23051Tbdr | Image Filename: | 3SECT.TIF | SEDMBSNSEC1.tif |

BROWN AND CALDWELL

SUBMITTED: _____ PROJECT MANAGER DATE: _____
APPROVED: _____ BROWN AND CALDWELL DATE: _____
APPROVED: _____ DATE: _____

LINE IS 2 INCHES AT FULL SIZE (IF NOT 2"-SCALE ACCORDINGLY)

FILE 23051-037
DRAWN TOH
DESIGNED AS
CHECKED
CHECKED

PRELIMINARY

THIS DRAWING IS NOT VALID FOR CONSTRUCTION PURPOSES UNLESS IT BEARS THE SEAL AND SIGNATURE OF A DULY REGISTERED PROFESSIONAL

REVISIONS

ZONE	REV	DESCRIPTION	BY	DATE	APP

CITY OF ANTIOCH
CONTRA COSTA COUNTY, CALIFORNIA

WATER TREATMENT PLANT UPGRADE

PLANT A SEDIMENTATION BASINS 1 AND 2

TUBE SETTLERS AND SUPPORTS

SCALE AS SHOWN

DRAWING NUMBER M103

SHEET NUMBER _ OF _

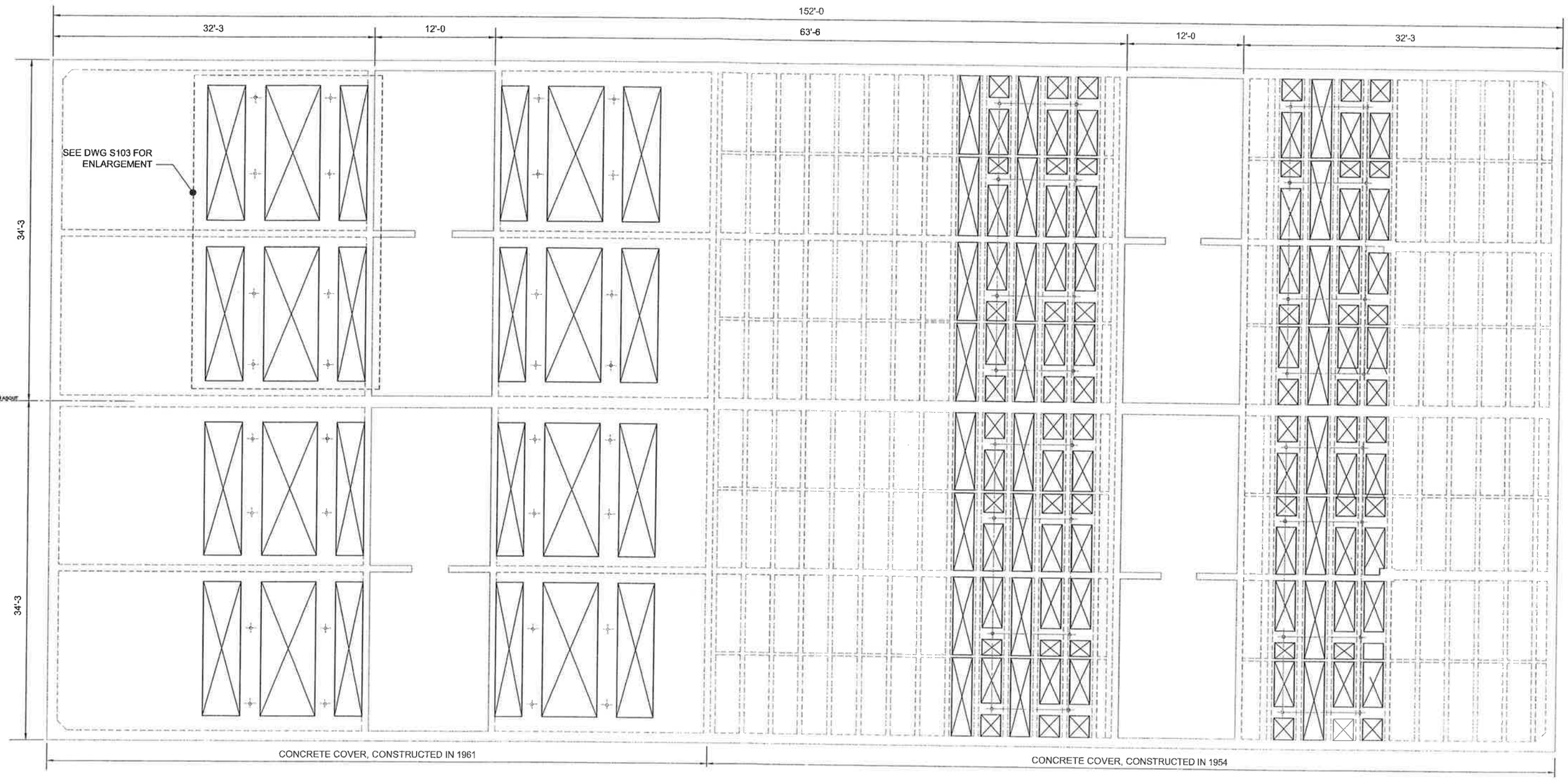

BASIN COVER PLAN

SCALE: 3/16" = 1'-0

NOTES:

1. FIELD VERIFY DIMENSION WITH *
2. SEE MECHANICAL DRAWINGS FOR ALUMINUM COVER
3. NEW SLAB OPENING IN EXISTING CONCRETE SHALL BE SAW-CUT AND COATED WITH EPOXY BONDING COMPOUND AND MORTAR.

Filename: 23051-S101dwg Plot date: Sep 30, 2002-04:18:14pm Plotted by: TOgbe-Habte. Xref Filename: | 23051Tbdr | X-SEDIMBSN | Image Filename: |

BROWN AND CALDWELL

SUBMITTED: _____ PROJECT MANAGER DATE: _____
APPROVED: _____ BROWN AND CALDWELL DATE: _____
APPROVED: _____ DATE: _____

LINE IS 2 INCHES AT FULL SIZE (IF NOT 2"-SCALE ACCORDINGLY)

FILE 23051-037
DRAWN TOH
DESIGNED JLI
CHECKED AS
CHECKED

PRELIMINARY

THIS DRAWING IS NOT VALID FOR CONSTRUCTION PURPOSES UNLESS IT BEARS THE SEAL AND SIGNATURE OF A DULY REGISTERED PROFESSIONAL

REVISIONS

ZONE	REV	DESCRIPTION	BY	DATE	APP

CITY OF ANTIOCH
CONTRA COSTA COUNTY, CALIFORNIA

WATER TREATMENT PLANT UPGRADE

PLANT A SEDIMENTATION BASINS 1 AND 2

DEMOLITION BASIN COVER PLAN

SCALE AS SHOWN
DRAWING NUMBER **S101**
SHEET NUMBER _ OF _

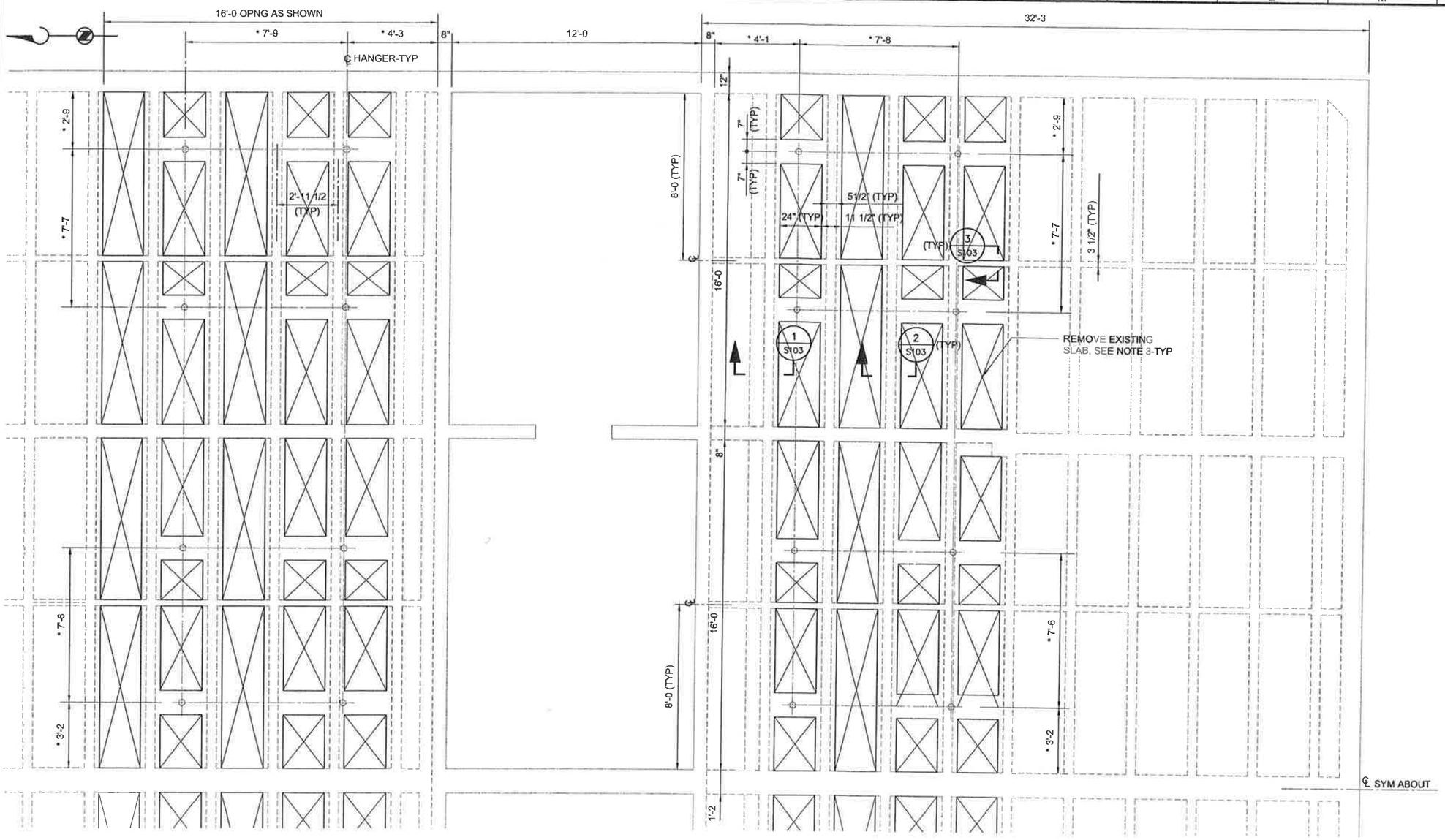

PARTIAL COVER PLAN AT S-E CORNER

SCALE: 3/8" = 1'-0

NOTE:

1. FIELD VERIFY DIMENSION WITH *
2. SEE MECHANICAL DRAWINGS FOR ALUMINUM COVER
3. NEW SLAB OPENING IN EXISTING CONCRETE SHALL BE SAW-CUT AND COATED WITH EPOXY BONDING COMPOUND AND MORTAR.

Filename: 23051-S102.dwg Plot date: Sep 30, 2002-04:19:50pm Plotted by: TOgbe-Hiatts. Xref Filename: | 23051Tbdr | X-SEDIMBSN | Image Filename: |

BROWN AND CALDWELL

SUBMITTED: _____ DATE: _____
PROJECT MANAGER
APPROVED: _____ DATE: _____
BROWN AND CALDWELL
APPROVED: _____ DATE: _____

LINE IS 2 INCHES AT FULL SIZE (IF NOT 2"-SCALE ACCORDINGLY)

FILE 23051-037
DRAWN TOH
DESIGNED JLT
CHECKED AS
CHECKED

PRELIMINARY

THIS DRAWING IS NOT VALID FOR CONSTRUCTION PURPOSES UNLESS IT BEARS THE SEAL AND SIGNATURE OF A DULY REGISTERED PROFESSIONAL

REVISIONS

ZONE	REV	DESCRIPTION	BY	DATE	APP

CITY OF ANTIOCH
CONTRA COSTA COUNTY, CALIFORNIA

WATER TREATMENT PLANT UPGRADE

PLANT A SEDIMENTATION BASINS 1 AND 2

DEMOLITION PARTIAL PLAN

SCALE: AS SHOWN

DRAWING NUMBER: **S102**

SHEET NUMBER: _ OF _

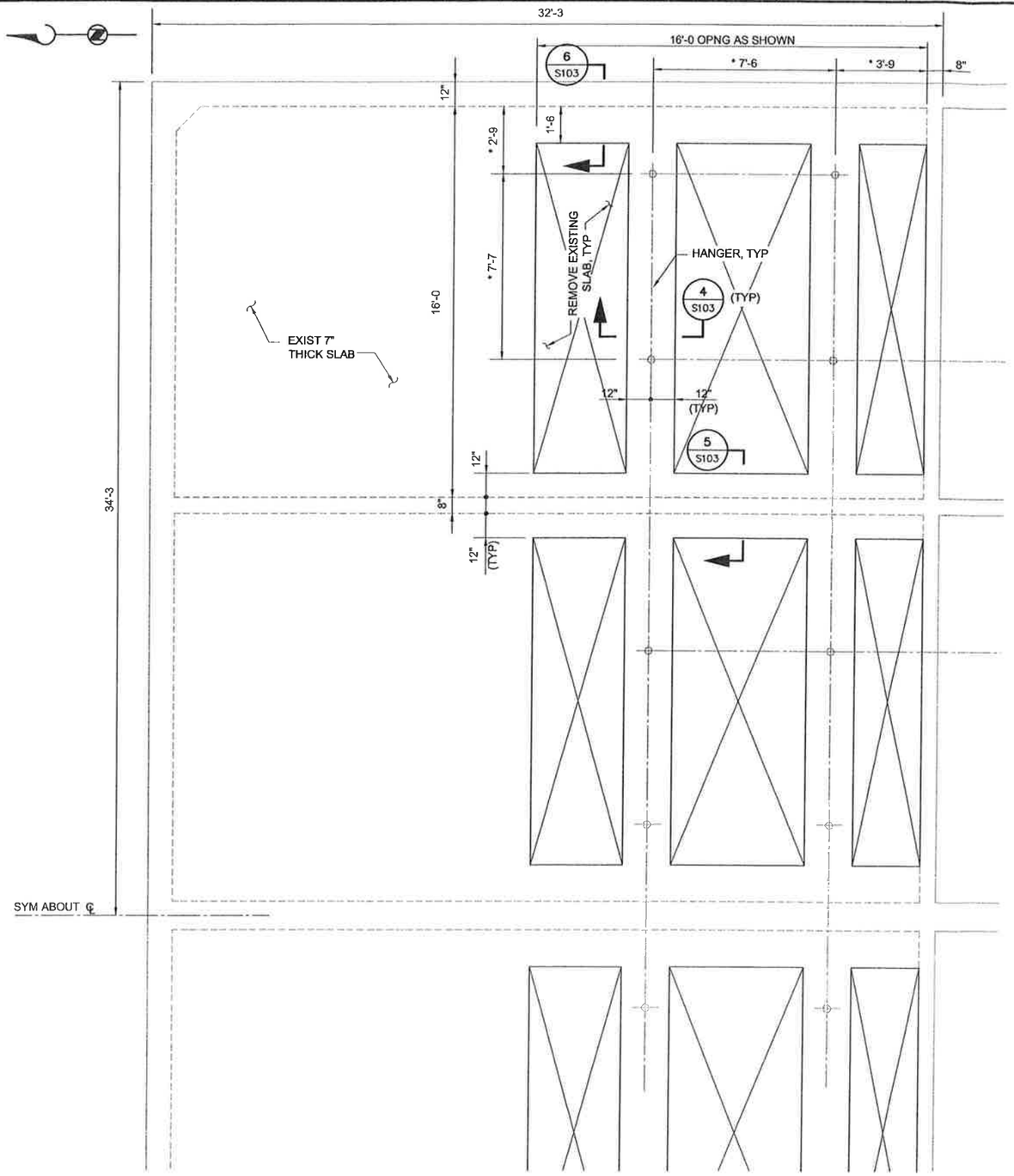

PARTIAL COVER PLAN AT N-E CORNER-TYPICAL

SCALE: 3/8" = 1'-0

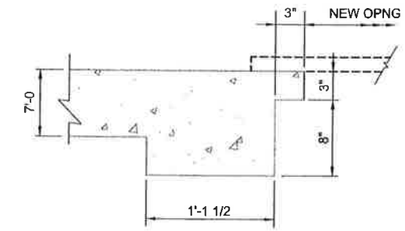

SECTION 1/S101

SCALE: 1 1/2" = 1'-0

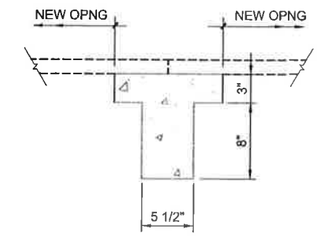

SECTION 2/S101

SCALE: 1 1/2" = 1'-0

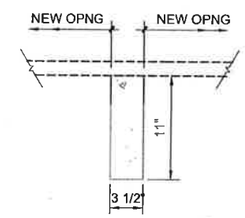

SECTION 3/S101

SCALE: 1 1/2" = 1'-0

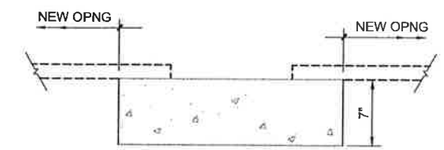

SECTION 4/S103

SCALE: 1 1/2" = 1'-0

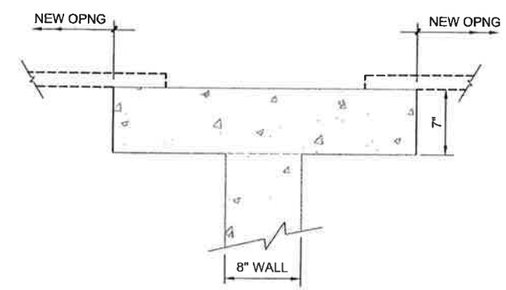

SECTION 5/S103

SCALE: 1 1/2" = 1'-0

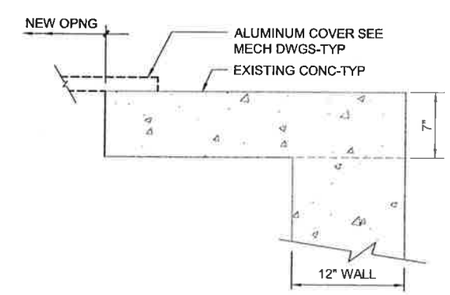

SECTION 6/S103

SCALE: 1 1/2" = 1'-0

NOTE:

1. FIELD VERIFY DIMENSION WITH *
2. SEE MECHANICAL DRAWINGS FOR ALUMINUM COVER
3. NEW SLAB OPENING IN EXISTING CONCRETE SHALL BE SAW-CUT AND COATED WITH EPOXY BONDING COMPOUND AND MORTAR.

Filename: 23051-S1030.dwg Plot date: Sep 30, 2002-04:21:30pm Plotted by: TOgse-Habte, Xref Filename: | 23051Tbdr | X-SEDIMBSN | Image Filename: |

BROWN AND CALDWELL

SUBMITTED: _____ DATE: _____ (PROJECT MANAGER)
APPROVED: _____ DATE: _____ (BROWN AND CALDWELL)
APPROVED: _____ DATE: _____

LINE IS 2 INCHES AT FULL SIZE (IF NOT 2"-SCALE ACCORDINGLY)

FILE 23051-037
DRAWN TOH
DESIGNED JLI
CHECKED AS
CHECKED

REVISIONS

ZONE	REV	DESCRIPTION	BY	DATE	APP

CITY OF ANTIOCH
CONTRA COSTA COUNTY, CALIFORNIA

WATER TREATMENT PLANT UPGRADE

PLANT A SEDIMENTATION BASINS 1 AND 2

DEMOLITION PARTIAL PLANS AND SECTIONS

SCALE AS SHOWN

DRAWING NUMBER **S103**

SHEET NUMBER _ OF _

CITY OF ANTIOCH

Contra Costa County, California

PROJECT MANUAL FOR THE CONSTRUCTION OF

RIVER PUMPING STATION EXPANSION - PHASE II

PART C - DRAWINGS

NOVEMBER 1996

LOCATION MAP

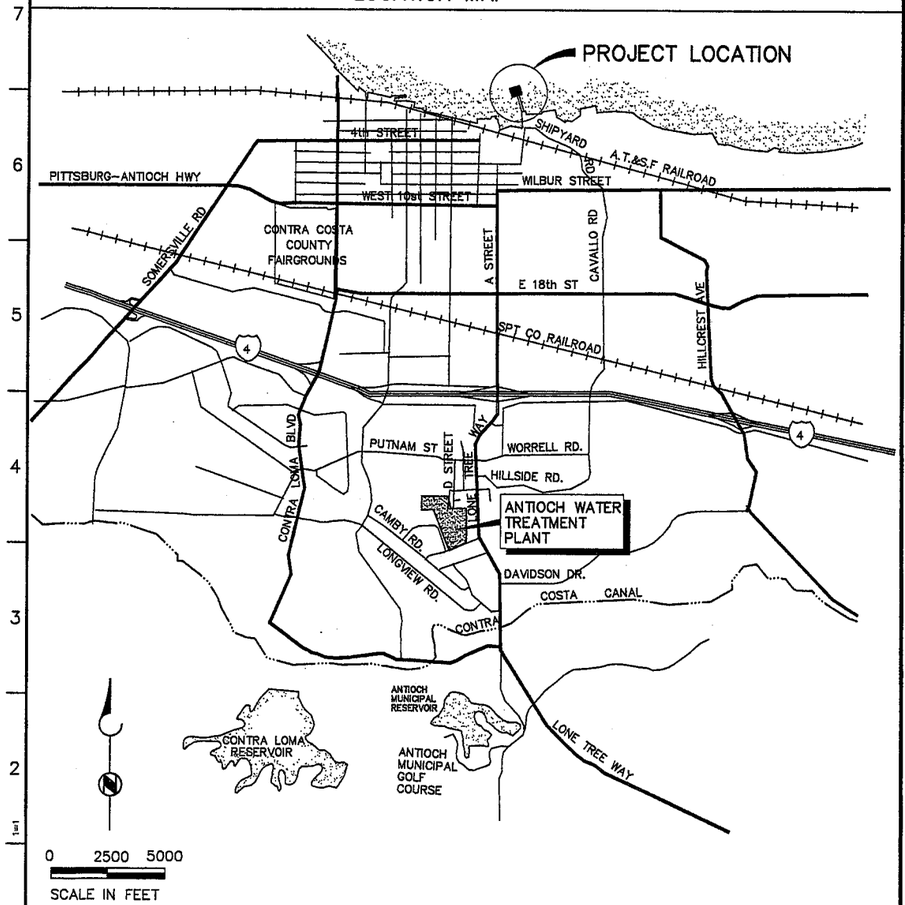

INDEX OF DRAWINGS

SHEET NUMBER	DRAWING NUMBER	DRAWING TITLE
1	G1	LOCATION MAP, INDEX OF DRAWINGS, SECTION AND DETAIL NUMBERING SYSTEM
2	S1	PLANS
3	S2	SECTIONS
4	S3	SECTIONS
5	S4	SECTIONS
6	S5	SECTIONS AND DETAILS
7	M1	DEMOLITION PLAN
8	M2	MODIFICATION PLAN AND DETAIL
9	M3	SECTIONS
10	E1	SYMBOLS 1
11	E2	SYMBOLS 2
12	E3	DEMOLITION ONE-LINE DIAGRAM
13	E4	MODIFICATION ONE-LINE DIAGRAM
14	E5	DEMOLITION PLAN
15	E6	MODIFICATION PLAN
16	E7	CONTROL DIAGRAMS

ABBREVIATIONS

APA	AMERICAN PLYWOOD ASSOCIATION
AWWA	AMERICAN WATER WORKS ASSOCIATION
@	AT
ASTM	AMERICAN SOCIETY FOR TESTING AND MATERIALS
CONT	CONTINUE
ø	DIAMETER
DET	DETAIL
DWG	DRAWING
EA	EACH
EL	ELEVATION
GALV	GALVANIZED
MLLW	MEAN LOWER LOW WATER
REINF	REINFORCING
SS	STAINLESS STEEL
S4S	SURFACE FOUR SIDES
STL	STEEL
T&G	TONGUE AND GROOVE
TYP	TYPICAL
UBC	UNIFORM BUILDING CODE
WWF	WELDED WIRE FABRIC

SECTION AND DETAIL NUMBERING SYSTEM

(1) SECTION CUT ON DWG M1

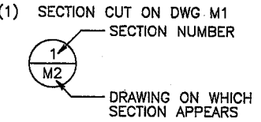

(2) DWG M2 THIS SECTION IS IDENTIFIED AS:

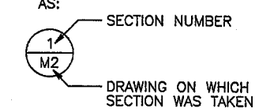

(3) DETAILS ARE CROSS-REFERENCED IN A SIMILAR MANNER, EXCEPT THAT DETAILS ARE IDENTIFIED BY LETTER RATHER THAN BY NUMBER.

BROWN AND CALDWELL

SUBMITTED: PROJECT MANAGER DATE: 11-19-96
APPROVED: BROWN AND CALDWELL DATE: 11-19-96
APPROVED: DATE:

LINE IS 2 INCHES AT FULL SIZE (IF NOT 2"-SCALE ACCORDINGLY)

FILE 4398
DRAWN C. TO
DESIGNED A. SHEN
CHECKED W.K.F.
CHECKED

REGISTERED PROFESSIONAL ENGINEER WILLIAM MEGENEY NO. 41433 Exp. 9-30-99 CIVIL STATE OF CALIFORNIA

REVISIONS

ZONE	REV.	DESCRIPTION	BY	DATE	APP.

CITY OF ANTIOCH, CALIFORNIA

RIVER PUMPING STATION EXPANSION - PHASE II

LOCATION MAP, INDEX OF DRWAINGS, SECTION AND DETAIL NUMBERING SYSTEM

SCALE: AS SHOWN

DRAWING NUMBER: G1

SHEET NUMBER: 1

11-15-96 ChuT

4398G1

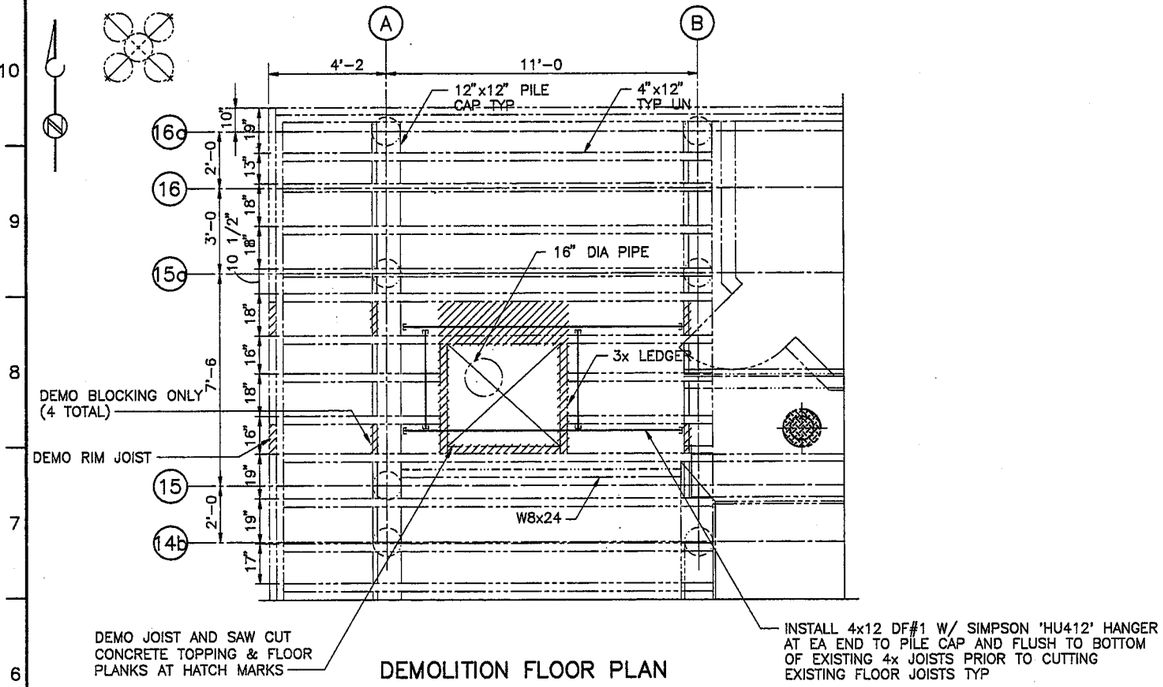

DEMOLITION FLOOR PLAN

SCALE: 3/8"=1'-0

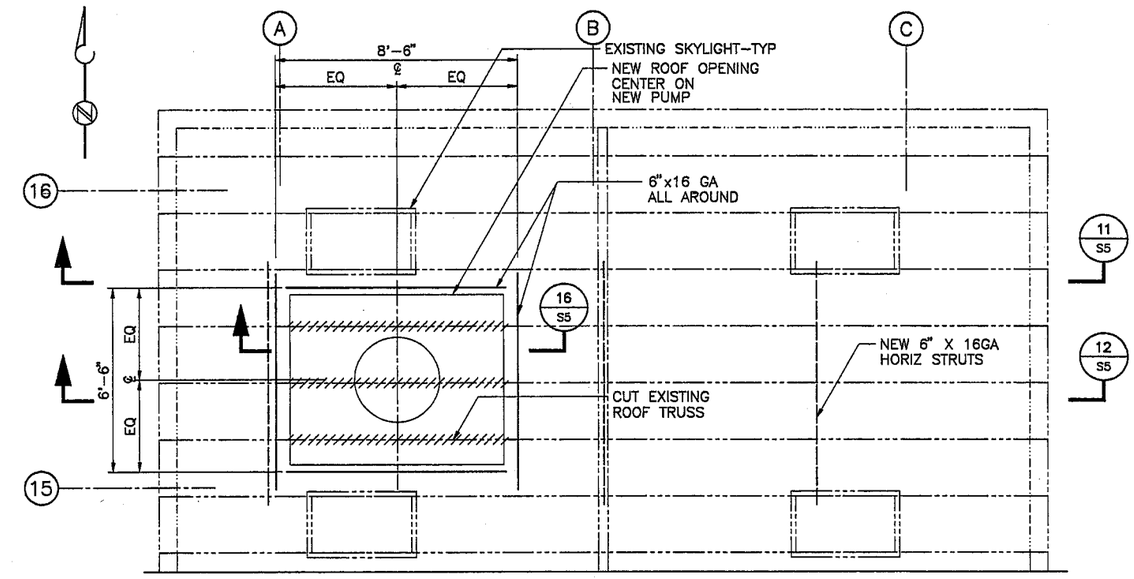

ROOF PLAN

SCALE: 3/8"=1'-0

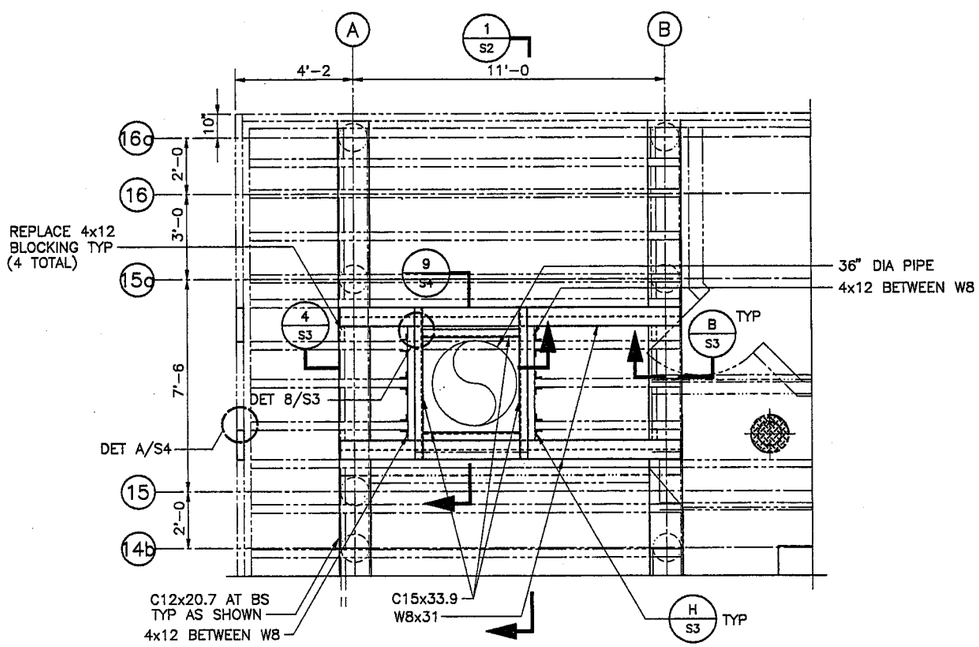

MODIFICATION FLOOR PLAN

SCALE: 3/8"=1'-0

GENERAL NOTES:

1. ALL DIMENSIONS SIZES AND CONNECTIONS OF THE MODIFYING STRUCTURES SHALL BE VERIFIED AND MATCHED WITH THE EXISTING STRUCTURES.
2. ALL STEEL MEMBERS, PLATES, BOLTS, NUTS AND WASHERS SHOWN BELOW M.L.L.W. EL 0.00 SHALL BE TYPE 316 STAINLESS STEEL UNLESS SHOWN OTHERWISE. MATERIAL FOR STRUCTURAL STAINLESS STEEL SHALL CONFORM WITH ASTM A316. ALL STEEL STRUCTURAL SHAPES NOT STAINLESS STEEL CONFORM WITH ASTM A36 AND SHALL BE HOT-DIP GALVANIZED. MINIMUM SIZE OF FILLET WELD SHALL BE 3/16" UNLESS SHOWN OTHERWISE. NAILS AND SPIKES SHALL BE HOT-DIP GALVANIZED.
3. ALL LUMBER SHALL BE NO. 1 DOUGLAS FIR ROUGH PER WCLA RULE NO. 16 AND SHALL BE PRESSURE TREATED WITH AMMONIACAL ZINC COPPER ARSENITE (AZCA), CHEMONITE OR EQUAL. PRESSURE TREATMENT SHALL BE IN ACCORDANCE WITH AWPB STANDARD LP-2 AND GRADE MARK APPLICABLE FIELD CUTS AND HOLES SHALL BE COATED WITH HEAVY BRUSH COAT OF SAME CHEMICAL USED FOR TREATMENT AND SHALL COMPLY WITH AWPA M4.

LEGEND

INDICATES EXISTING MEMBER TO BE REMOVED

INDICATES EXISTING MEMBER TO REMAIN

INDICATES NEW MEMBERS

BROWN AND CALDWELL

SUBMITTED: PROJECT MANAGER DATE: 11-18-96
APPROVED: BROWN AND CALDWELL DATE: 11-19-96
APPROVED: DATE:

LINE IS 2 INCHES AT FULL SIZE (IF NOT 2"-SCALE ACCORDINGLY)

FILE 4398
DRAWN TLU
DESIGNED RN
CHECKED CYC
CHECKED

REGISTERED PROFESSIONAL ENGINEER RAMON MENDONSHEN No. 41433 Exp. 9-30-99 CIVIL STATE OF CALIFORNIA

REVISIONS

ZONE	REV.	DESCRIPTION	BY	DATE	APP.

CITY OF ANTIOCH, CALIFORNIA

RIVER PUMPING STATION EXPANSION - PHASE II

PUMPING STATION

PLANS

SCALE 3/8"=1'-0

DRAWING NUMBER **S1**

SHEET NUMBER 2

4398S1 11-18-96 TLU

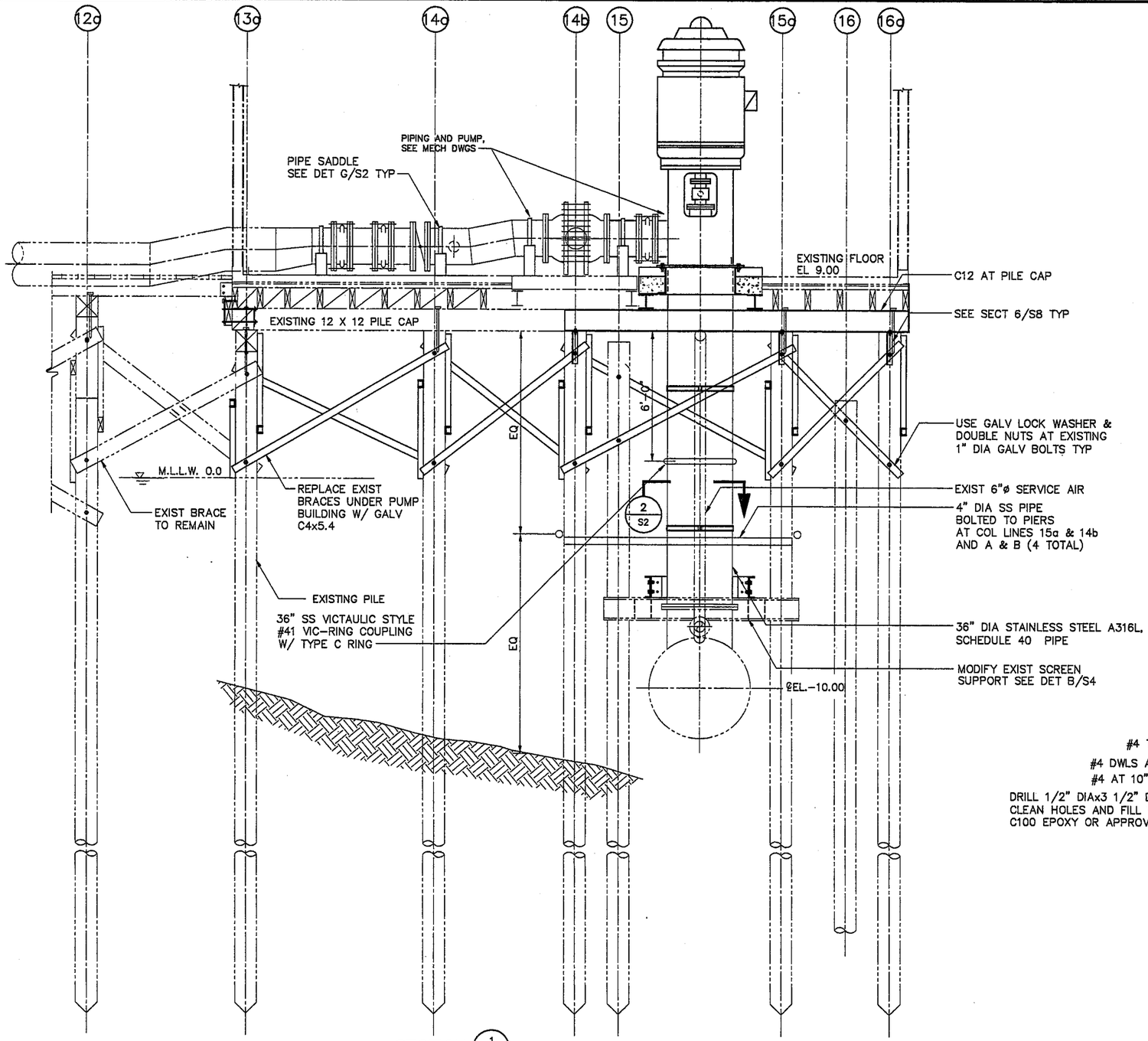

SECTION $\frac{1}{S1}$

SCALE: 3/8"=1'-0

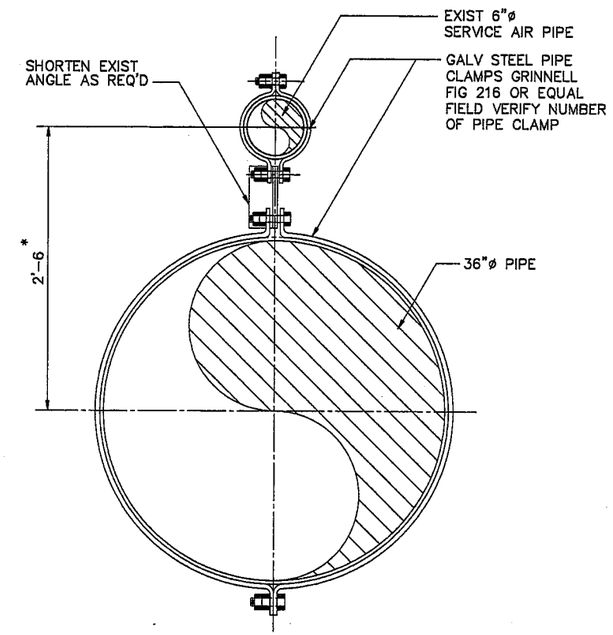

* DIMENSION TO BE VERIFIED IN FIELD

SECTION $\frac{2}{S2}$ (TYP OF 2)

SCALE: 1 1/2"=1'-0"

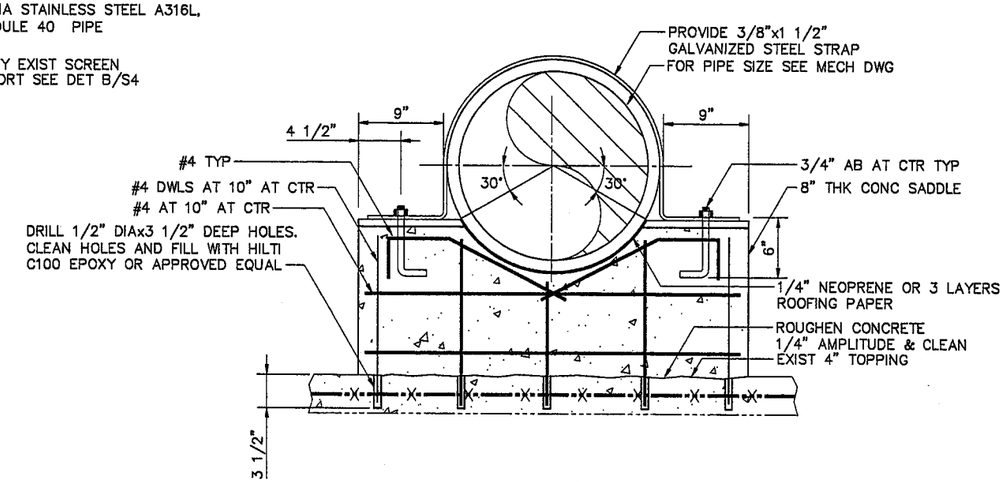

DETAIL $\frac{G}{S2}$

SCALE: 1 1/2"=1'-0"

BROWN AND CALDWELL

SUBMITTED: PROJECT MANAGER DATE: 11-19-96
APPROVED: BROWN AND CALDWELL DATE: 11-19-96
APPROVED: DATE:

LINE IS 2 INCHES AT FULL SIZE (IF NOT 2"-SCALE ACCORDINGLY)

FILE 4398
DRAWN TLU
DESIGNED RN
CHECKED CYC
CHECKED WKF

REGISTERED PROFESSIONAL ENGINEER ALBERT MENG-SHEN No. 41433 Exp. 9-30-99 CIVIL STATE OF CALIFORNIA

REVISIONS

ZONE	REV.	DESCRIPTION	BY	DATE	APP.

CITY OF ANTIOCH, CALIFORNIA

RIVER PUMPING STATION EXPANSION - PHASE II

PUMPING STATION

SECTIONS AND DETAILS

SCALE: AS SHOWN

DRAWING NUMBER: S2

SHEET NUMBER: 3

11-18-96 TLU

439852

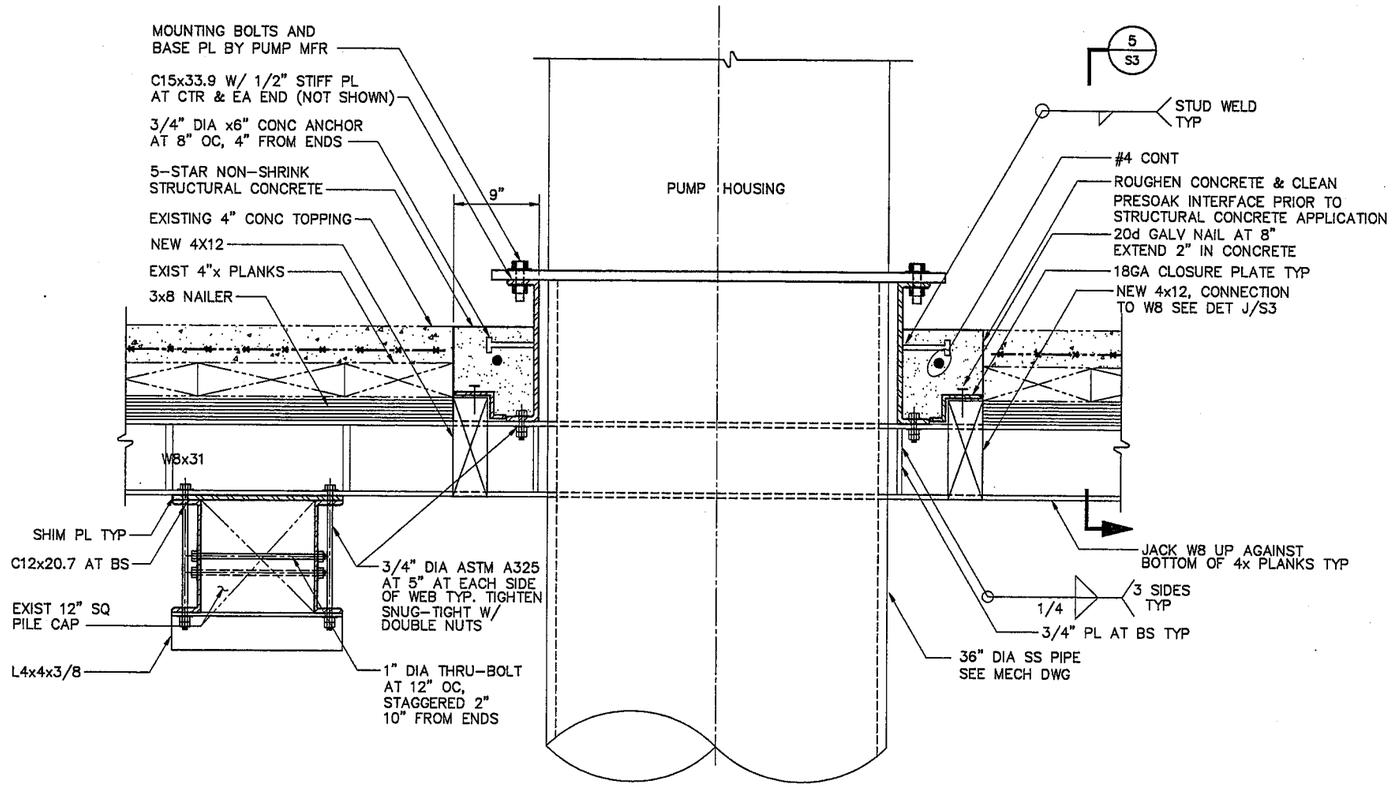

SECTION 4/S1
SCALE: 1 1/2"=1'-0"

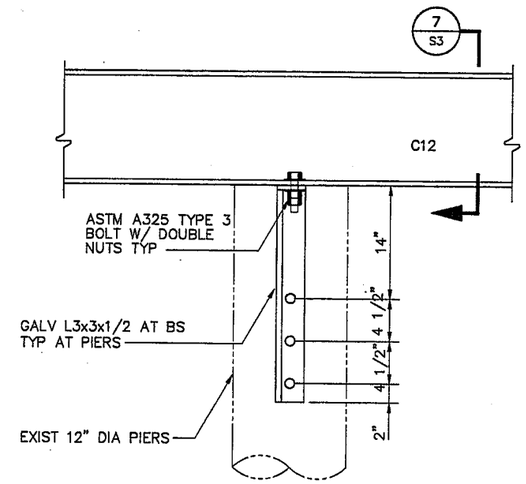

SECTION 6/S2
SCALE: 1 1/2"=1'-0"

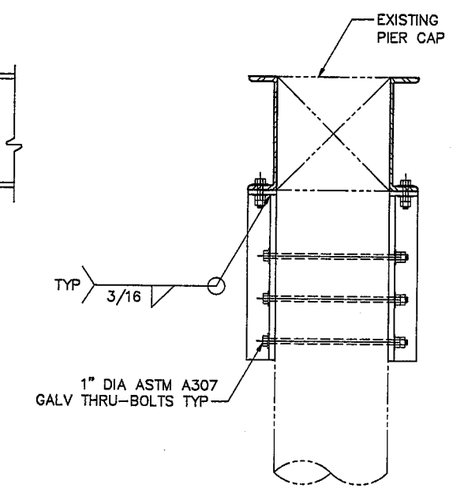

SECTION 7/S3
SCALE: 1 1/2"=1'-0"

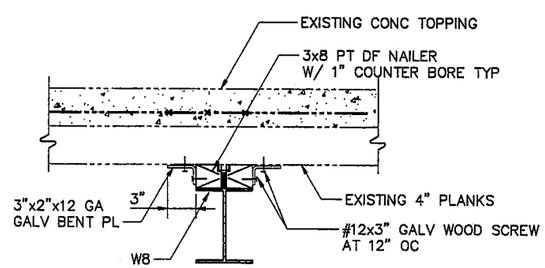

SECTION 5/S3
SCALE: 1 1/2"=1'-0"

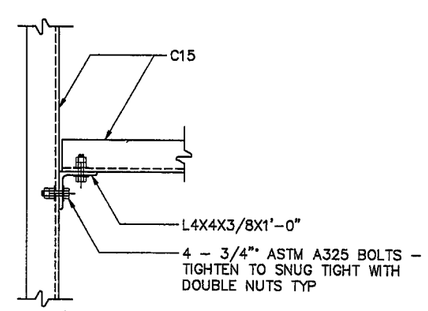

SECTION 8/S1
SCALE: 1 1/2"=1'-0"

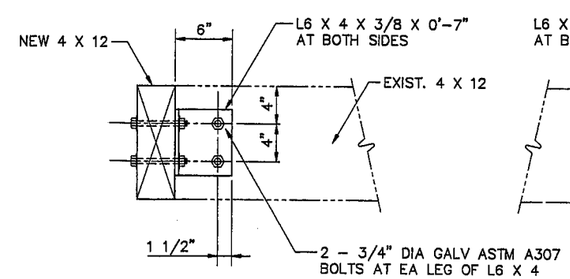

DETAIL H/S1
SCALE: 1 1/2"=1'-0"

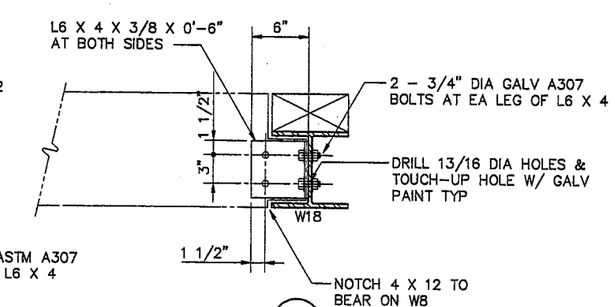

DETAIL J/S3
SCALE: 1 1/2"=1'-0"

BROWN AND CALDWELL

SUBMITTED: [signature] PROJECT MANAGER DATE: 11-19-96
APPROVED: [signature] BROWN AND CALDWELL DATE: 11-19-96
APPROVED: DATE:

LINE IS 2 INCHES AT FULL SIZE (IF NOT 2"-SCALE ACCORDINGLY)

FILE 4398
DRAWN TLU
DESIGNED RN
CHECKED CYC
CHECKED

REGISTERED PROFESSIONAL ENGINEER ALLEN MEMENS SHEN No. 41433 Exp. 9-30-99 CIVIL STATE OF CALIFORNIA

REVISIONS

ZONE	REV.	DESCRIPTION	BY	DATE	APP.

CITY OF ANTIOCH, CALIFORNIA

RIVER PUMPING STATION EXPANSION - PHASE II

PUMPING STATION

SECTIONS AND DETAILS

SCALE 3/8"=1'-0
DRAWING NUMBER S3
SHEET NUMBER 4

4398S3 11-18-96 TLU

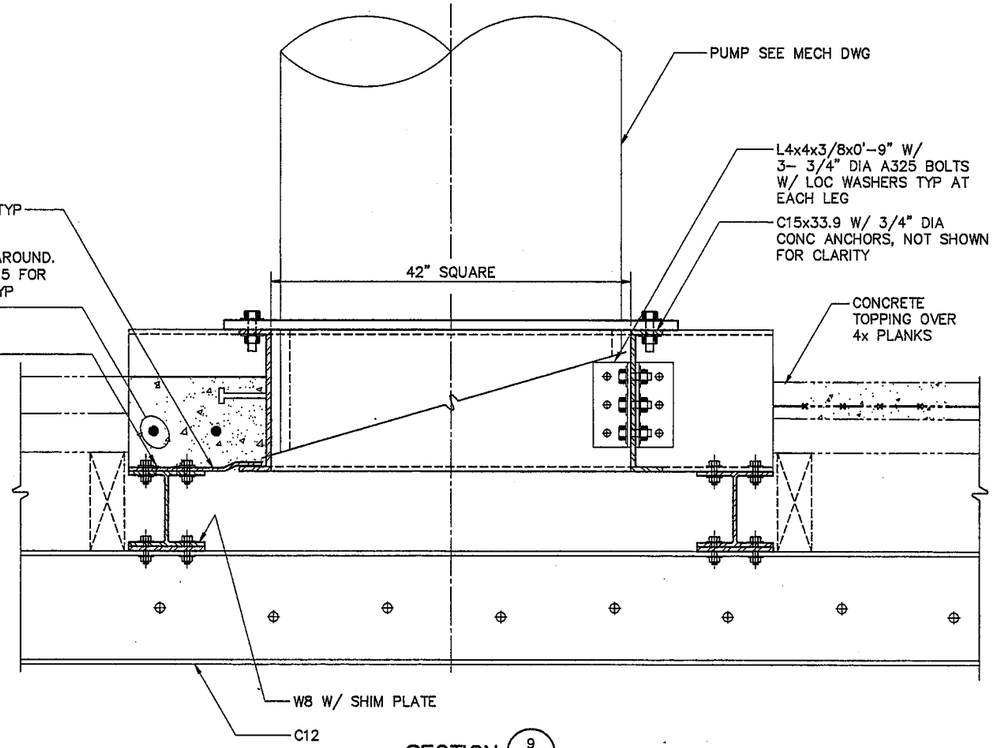

SECTION 9/S1
SCALE: 1 1/2"=1'-0"

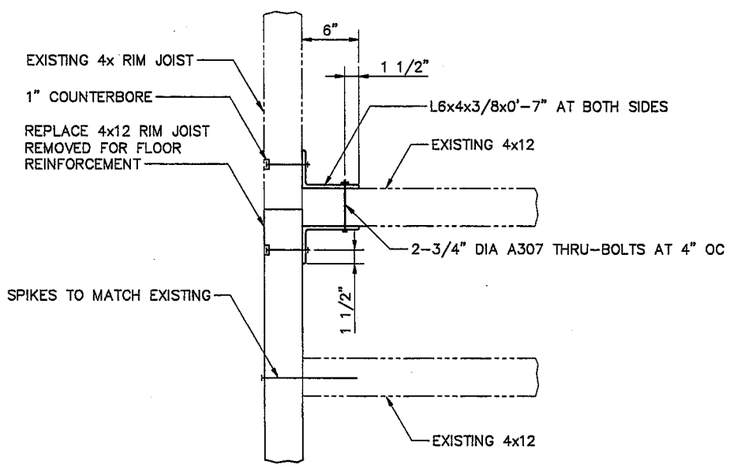

DETAIL A/S1
SCALE: 1 1/2"=1'-0"

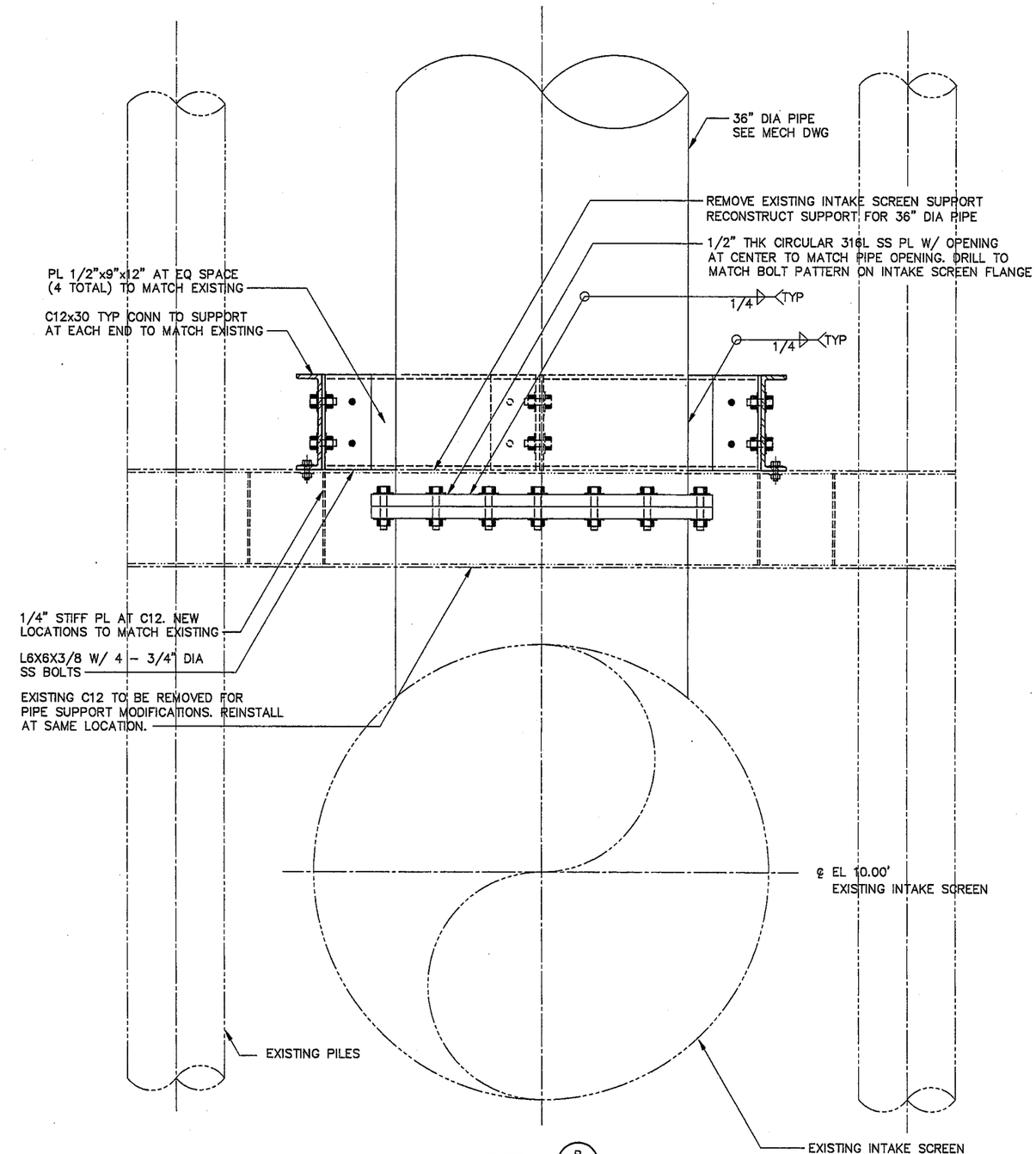

DETAIL B/S2
SCALE: 1 1/2"=1'-0"

BROWN AND CALDWELL

SUBMITTED: [signature] PROJECT MANAGER DATE: 11-19-96
APPROVED: [signature] BROWN AND CALDWELL DATE: 11-19-96
APPROVED: DATE:

LINE IS 2 INCHES AT FULL SIZE (IF NOT 2"-SCALE ACCORDINGLY)

FILE 4398
DRAWN TLU
DESIGNED RN
CHECKED CYC
CHECKED

REGISTERED PROFESSIONAL ENGINEER ALMIRA MENENDEZ SHEN No. 41433 Exp. 9-30-99 CIVIL STATE OF CALIFORNIA

REVISIONS

ZONE	REV.	DESCRIPTION	BY	DATE	APP.

CITY OF ANTIOCH, CALIFORNIA

RIVER PUMPING STATION EXPANSION - PHASE II

PUMPING STATION

SECTIONS AND DETAILS

SCALE AS SHOWN
DRAWING NUMBER S4
SHEET NUMBER 5

4398S1 11-15-96 ChuT

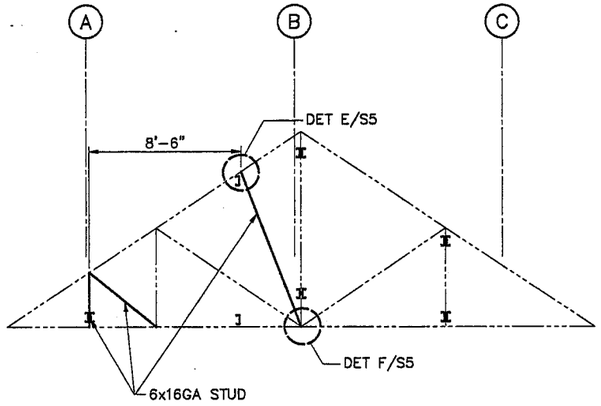

END TRUSS

SECTION 11/S1

SCALE: 1/4"=1'-0"

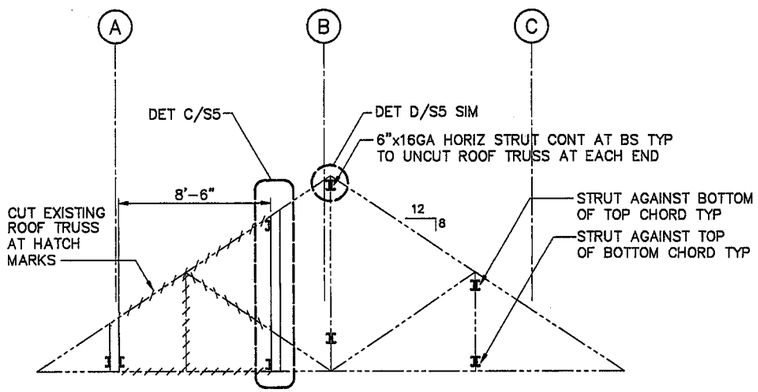

NOTE: INSTALL ALL HORIZ STRUTS PRIOR TO CUTTING ROOF TRUSSES FOR SKYLIGHT OPENING

MODIFIED TRUSS

SECTION 12/S1

SCALE: 1/4"=1'-0"

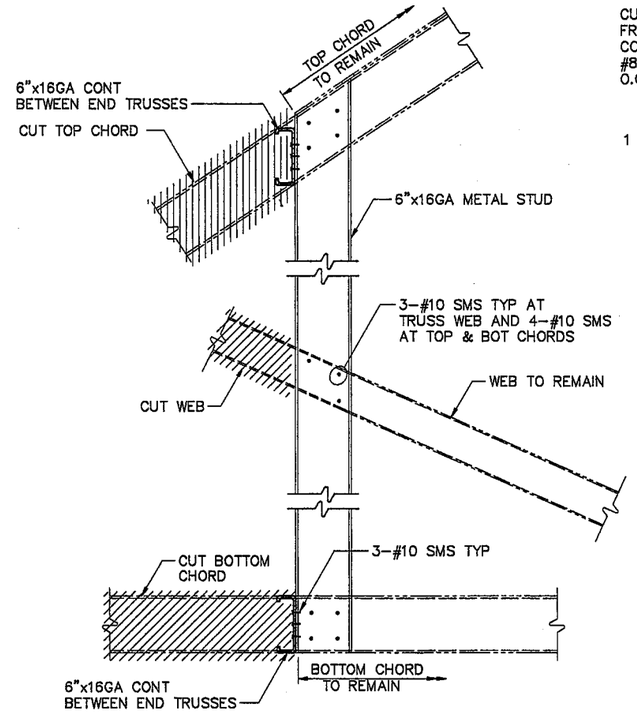

DETAIL C/S5

SCALE: 1 1/2"=1'-0"

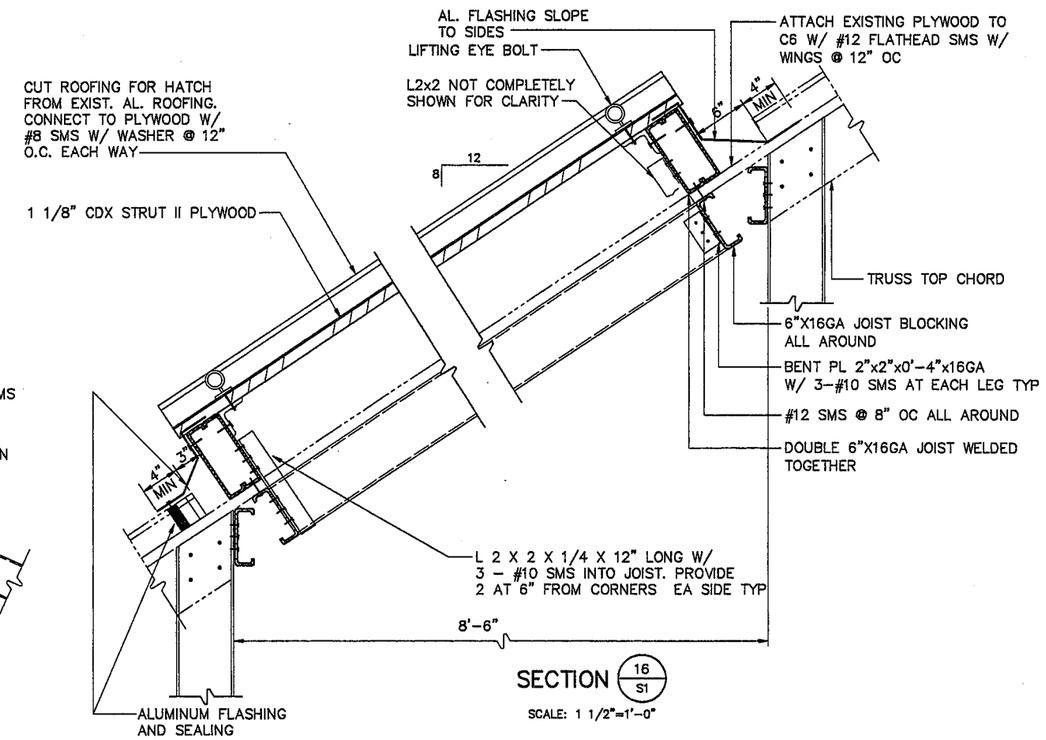

SECTION 16/S1

SCALE: 1 1/2"=1'-0"

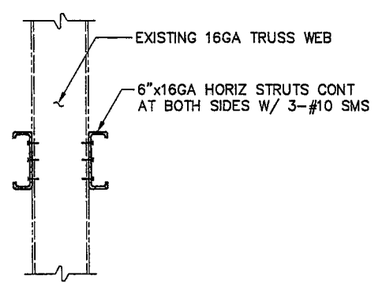

DETAIL D/S5

SCALE: 1 1/2"=1'-0"

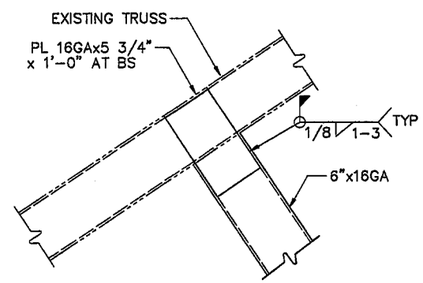

DETAIL E/S5

SCALE: 1 1/2"=1'-0"

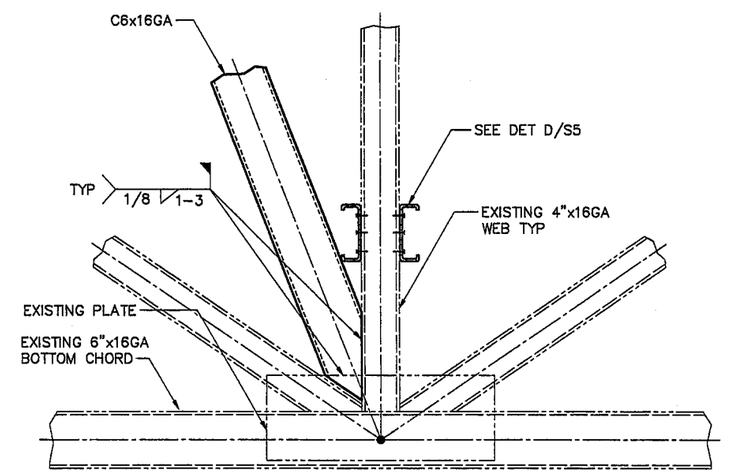

DETAIL F/S5

SCALE: 1 1/2"=1'-0"

CONSTRUCTION SEQUENCES FOR ROOF TRUSS MODIFICATION:

1. REMOVE ROOFING FOR NEW HATCH.
2. CONNECT VERTICAL METAL STUDS PER DETAIL C/S5 TO TRUSSES TO BE CUT.
3. INSTALL NEW WEB STUDS AT END TRUSSES PER SECTION 11/S5.
4. CONNECT HORIZONTAL STRUTS THROUGH TRUSSES TO BE CUT TO END TRUSSES PER DETAIL C/S5.
5. CUT WEBS AT TRUSSES UNDER ROOF OPENING (3 TOTAL) PER SECTION 12/S5.

BROWN AND CALDWELL

SUBMITTED: DATE: 11-19-96
APPROVED: PROJECT MANAGER BROWN AND CALDWELL DATE: 11-19-96
APPROVED: DATE:

LINE IS 2 INCHES AT FULL SIZE (IF NOT 2"-SCALE ACCORDINGLY)

FILE 4398
DRAWN TLU
DESIGNED RN
CHECKED CYC
CHECKED

REGISTERED PROFESSIONAL ENGINEER ALI MEHRAN SHEN No. 41433 Exp. 9-30-99 CIVIL STATE OF CALIFORNIA

REVISIONS

ZONE	REV.	DESCRIPTION	BY	DATE	APP.

CITY OF ANTIOCH, CALIFORNIA

RIVER PUMPING STATION
EXPANSION - PHASE II

PUMPING STATION

SECTIONS AND DETAILS

SCALE: AS SHOWN

DRAWING NUMBER: S5

SHEET NUMBER: 6

11-18-96 TLU

4398S5

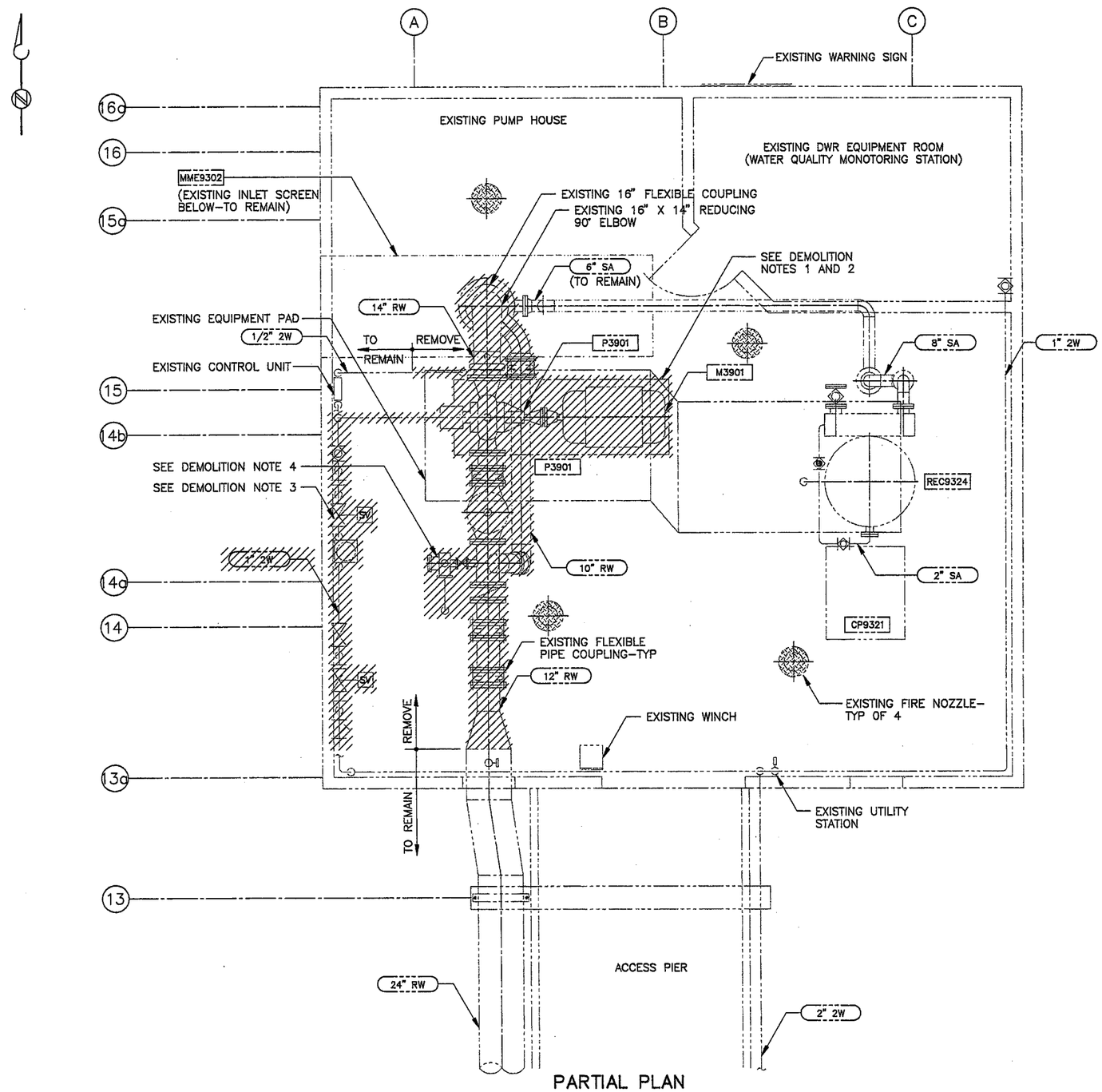

PARTIAL PLAN

DEMOLITION NOTES:

1. REMOVE EXISTING PUMP, MOTOR AND BASE. DISCONNECT AND REMOVE AS NECESSARY EXISTING NO. 2W CONNECTIONS TO PUMP MECHANICAL SEAL AND PUMP CASING (THIS PIPING WILL BE RECONNECTED TO NEW PUMP AS SHOWN ON DWG M2).
2. REMOVE EXISTING SUCTION, DISCHARGE, AND BYPASS PIPING, FITTINGS AND VALVES. REMOVE AND DISCONNECT SUCTION PIPING AT EXISTING SCREEN OUTLET FLANGE. TEMPORARILY SUPPORT EXISTING SCREEN AS NECESSARY TO REMOVE EXISTING SUCTION SUPPORTS.
3. REMOVE EXISTING VACUUM PRIMING SYSTEM INCLUDING PUMP, VALVES, PIPING, CONDUIT WIRING AND CONTROLS, RELOCATE SEAL WATER PIPING, VALVES, ETC. AS NECESSARY TO ALLOW INSTALLATION OF RELOCATED TRANSFORMER SEE ELECTRICAL DRAWINGS FOR ELECTRICAL MODIFICATIONS.
4. REMOVE EXISTING SURGE ANTICIPATOR VALVE AND PIPING. RELOCATE CONDUIT AND WIRING AS NECESSARY TO CONTROL NEW SURGE ANTICIPATOR VALVE FROM EXISTING G.A. INDUSTRIES SURGE ANTICIPATOR CONTROLLER.

BROWN AND CALDWELL

SUBMITTED: [signature] PROJECT MANAGER DATE: 11-19-96
APPROVED: [signature] BROWN AND CALDWELL DATE: 11-19-96
APPROVED: DATE:

LINE IS 2 INCHES AT FULL SIZE (IF NOT 2"-SCALE ACCORDINGLY)

FILE 4398
DRAWN C. TO
DESIGNED T. MOSSING
CHECKED AMS
CHECKED

REGISTERED PROFESSIONAL ENGINEER ALDEN MEYENBERG No. 41433 Exp. 9-30-99 CIVIL STATE OF CALIFORNIA

REGISTERED PROFESSIONAL ENGINEER THOMAS GREENBERG 28798 Exp. 9-30-99 MECHANICAL STATE OF CALIFORNIA

REVISIONS					
ZONE	REV.	DESCRIPTION	BY	DATE	APP.

CITY OF ANTIOCH, CALIFORNIA

RIVER PUMPING STATION EXPANSION - PHASE II

PUMPING STATION

DEMOLITION PLAN

SCALE 3/8"=1'-0

DRAWING NUMBER M1

SHEET NUMBER 7

4398M1 11-15-96 ChuT

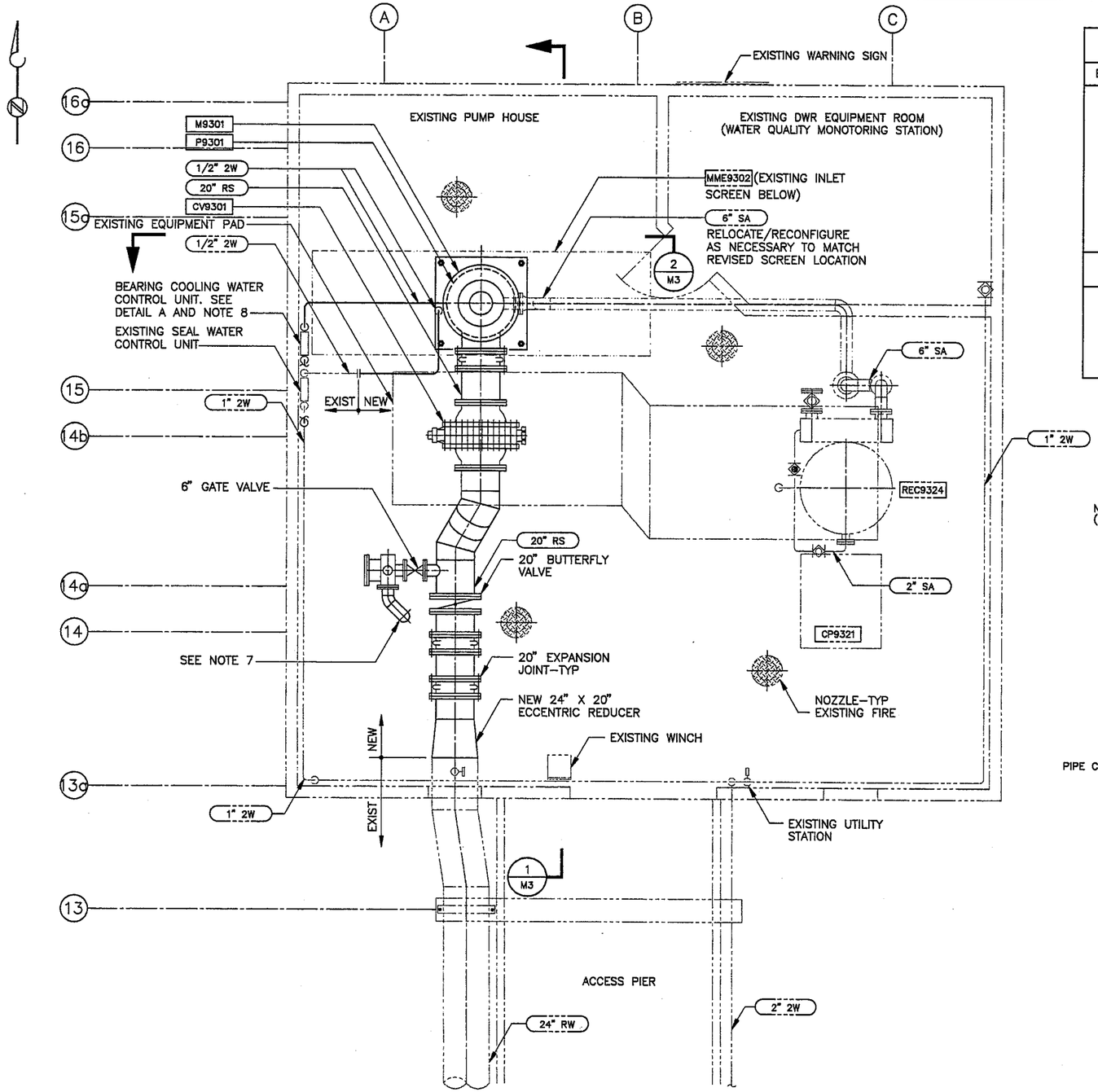

PARTIAL PLAN

SCALE: 3/8" = 1'-0

EQUIPMENT LIST	
EQUIPMENT NUMBER	DESCRIPTION
P9301	RIVER WATER PUMP 1
M9301	MOTOR 1
CV9301	CONTROL VALVE
CP9321	EXISTING COMPRESSOR UNIT
REC9324	EXISTING AIR RECIEVER
MME9302	EXISTING INLET SCREEN
PIPING SYSTEM	
RW	RAW WATER
SA	SERVICE AIR
2W	CITY WATER

NOTES:

1. CONNECT NEW 1/2" 2W TO EXISTING 1/2" SEAL WATER CONTROL UNIT SYSTEM AND ROUTE NEW PIPING TO PUMP SEAL WATER CONNECTION. PROVIDE PIPE SUPPORTS AS REQUIRED.
2. PROVIDE PUMP SUPPORT AS SHOWN ON DWG S1.
3. FIELD VERIFY EXISTING PIPING (RW) ELEVATION FOR NEW PUMP DISCHARGE CONNECTION. ADJUST NEW PIPING CONNECTION TO ACHIEVE PROPER FIT. PROVIDE SUPPORTS AS REQUIRED.
4. CONNECT NEW 1" 2W TO EXISTING 1" PRIMING SYSTEM AND ROUTE NEW PIPING TO TOP OF PUMP DISCHARGE ELBOW. PROVIDE PIPE SUPPORTS AS REQUIRED.
5. CORE DRILL THROUGH EXISTING CONCRETE FLOOR SLAB OVER EXISTING BLOCKED OPENING. PROVIDE CHECKER PLATE CLOSURE AT TOP OF FLOOR TO MATCH EXISTING PENETRATION.
6. ALL NEW PIPING SHALL BE SUPPORTED WITH PIPE HANGERS AND ATTACHED TO EXISTING WALL OR EXISTING METAL TRUSS.
7. INSTALL NEW 6-INCH SURGE ANTICIPATOR VALVE, G.A. INDUSTRIES, OR APPROVED EQUAL. VALVE SHALL BE CONTROLLED FROM EXISTING G.A. INDUSTRIES SURGE CONTROL CONTROLLER. INSTALL NEW 6-INCH DRAIN THRU FLOOR. CONFIGURE ALL TRIM PIPING TO MATCH THAT SHOWN FOR EXISTING VALVE.
8. ROUTE MOTOR BEARING COOLING WATER TO MOTOR CONNECTIONS AS REQUIRED. ROUTE 1/2" 2W DRAIN LINE TO NEAREST FLOOR PENETRATION.

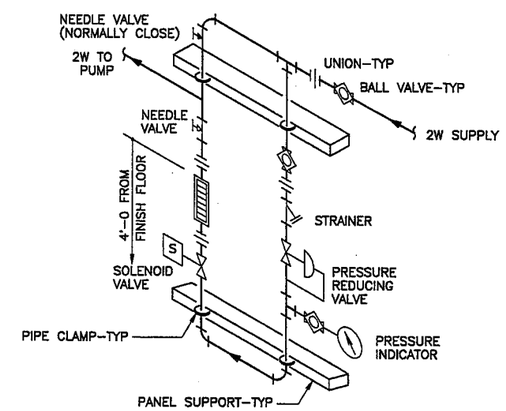

CONTROL UNIT TYPE A

DETAIL A/VAR

BROWN AND CALDWELL

SUBMITTED: [signature] PROJECT MANAGER DATE: 11-19-96

APPROVED: [signature] BROWN AND CALDWELL DATE: 11-19-96

APPROVED: DATE:

LINE IS 2 INCHES AT FULL SIZE (IF NOT 2"-SCALE ACCORDINGLY)

FILE 4398

DRAWN C. TO

DESIGNED T. MOSSSINGER

CHECKED AMS

CHECKED

REGISTERED PROFESSIONAL ENGINEER ALBION MEMENDESHEN No. 41433 Exp. 9-30-99 CIVIL STATE OF CALIFORNIA

REGISTERED PROFESSIONAL ENGINEER THOMAS GLEN MOSSINGER 26798 Exp. 9-30-98 MECHANICAL STATE OF CALIFORNIA

REVISIONS

ZONE	REV.	DESCRIPTION	BY	DATE	APP.

CITY OF ANTIOCH, CALIFORNIA

RIVER PUMPING STATION EXPANSION - PHASE II

PUMPING STATION

MODIFICATION PLAN AND DETAIL

SCALE 3/8"=1'-0

DRAWING NUMBER M2

SHEET NUMBER 8

4398M2 11-15-96 ChuT

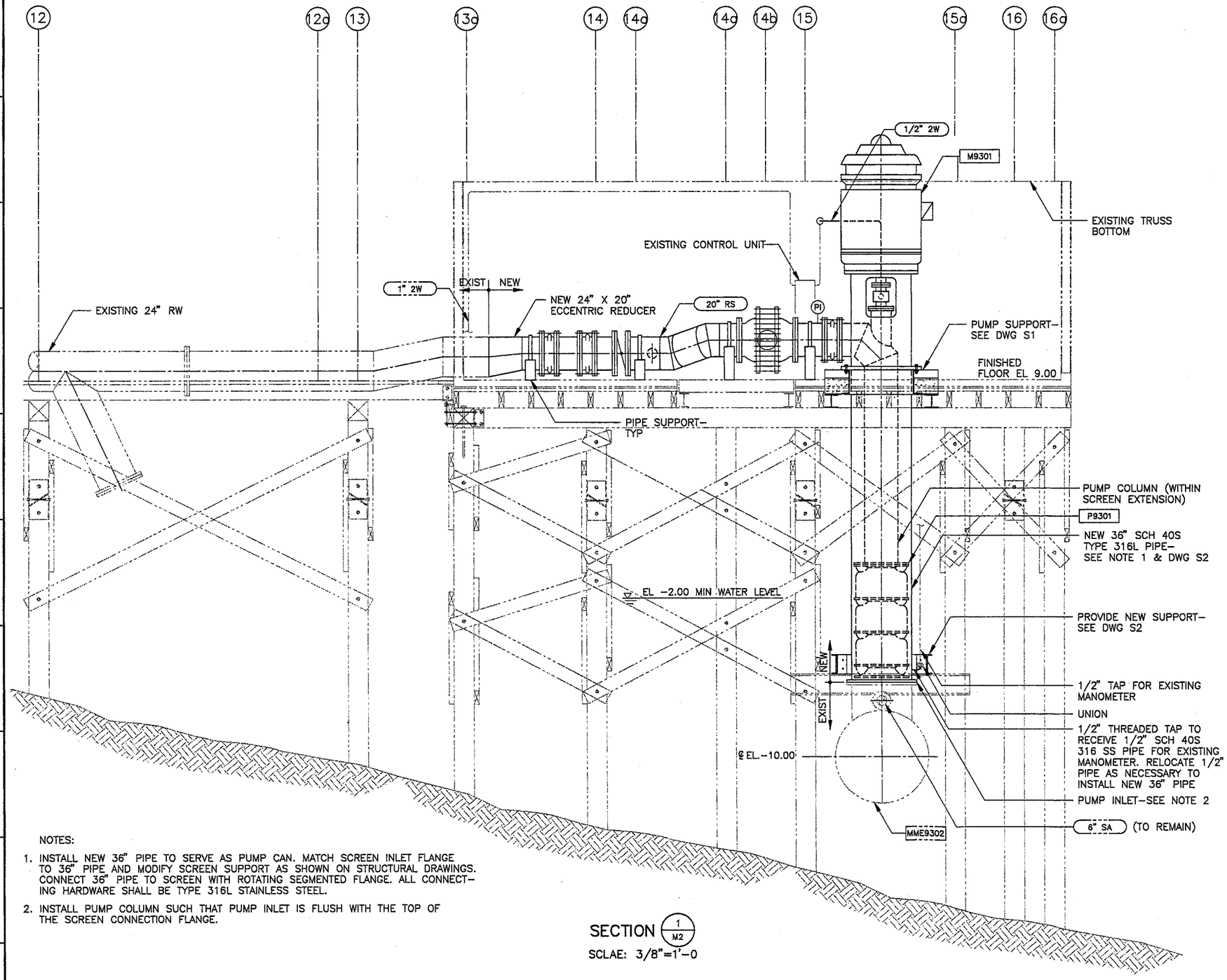

SECTION 1/M2
SCLAE: 3/8"=1'–0

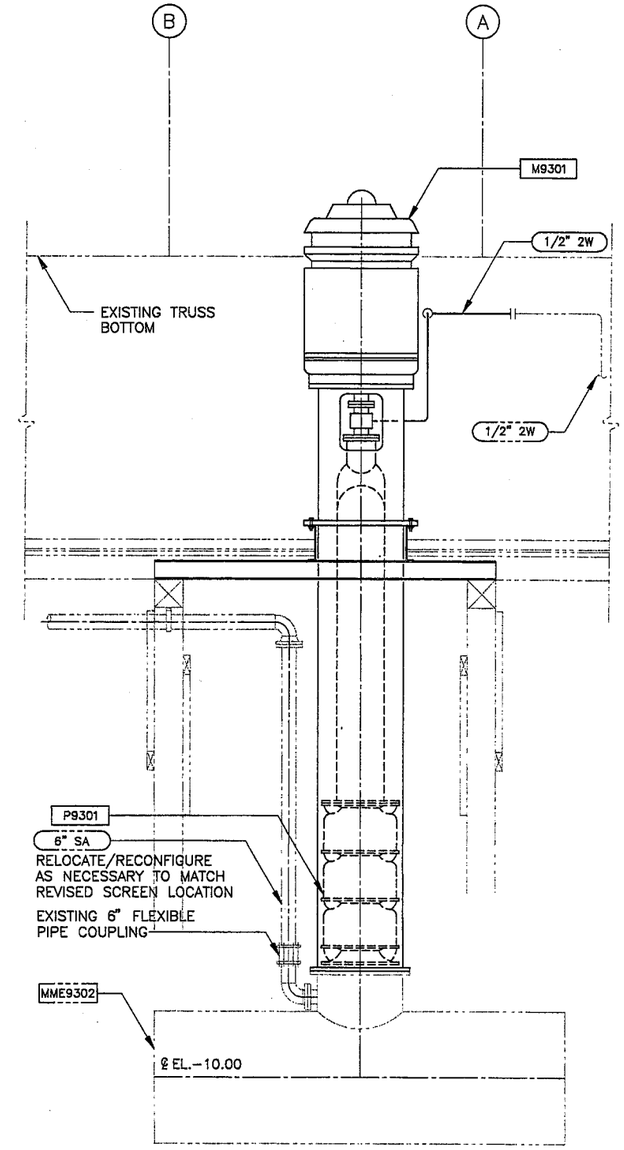

SECTION 2/M2
SCLAE: 3/8"=1'–0

NOTES:

1. INSTALL NEW 36" PIPE TO SERVE AS PUMP CAN. MATCH SCREEN INLET FLANGE TO 36" PIPE AND MODIFY SCREEN SUPPORT AS SHOWN ON STRUCTURAL DRAWINGS. CONNECT 36" PIPE TO SCREEN WITH ROTATING SEGMENTED FLANGE. ALL CONNECTING HARDWARE SHALL BE TYPE 316L STAINLESS STEEL.
2. INSTALL PUMP COLUMN SUCH THAT PUMP INLET IS FLUSH WITH THE TOP OF THE SCREEN CONNECTION FLANGE.

BROWN AND CALDWELL

SUBMITTED: PROJECT MANAGER DATE: 11-19-96
APPROVED: BROWN AND CALDWELL DATE: 11-19-96
APPROVED: DATE:

LINE IS 2 INCHES AT FULL SIZE (IF NOT 2"–SCALE ACCORDINGLY)

FILE 4398
DRAWN C. TO
DESIGNED T. MOSSINGER
CHECKED AMS
CHECKED

REGISTERED PROFESSIONAL ENGINEER ANDREW M. SCHWARTZ No. 41433 Exp 9-30-99 CIVIL STATE OF CALIFORNIA

REGISTERED PROFESSIONAL ENGINEER THOMAS C. MOSSINGER 9-30-99

REVISIONS

ZONE	REV.	DESCRIPTION	BY	DATE	APP.

CITY OF ANTIOCH, CALIFORNIA

RIVER PUMPING STATION EXPANSION - PHASE II

PUMPING STATION

SECTIONS

SCALE 3/8"=1'–0

DRAWING NUMBER M3

SHEET NUMBER 9

11-15-96 ChuT

4398M3

PROJECT/SITE CONDITIONS

CORROSIVE — INDICATES THAT ALL ELECTRICAL EQUIPMENT AND MATERIALS INSTALLED WITHIN THE ROOM OR AREA IN WHICH THIS NOTATION APPEARS SHALL BE OF NEMA 4X CORROSION RESISTANT CONSTRUCTION SUITABLE FOR USE IN A WET LOCATION, UNLESS NOTED OTHERWISE

CLASS 1, DIV.1 GROUP D — INDICATES THAT ALL ELECTRICAL EQUIPMENT AND MATERIALS INSTALLED WITHIN THE ROOM OR AREA IN WHICH THIS NOTATION APPEARS SHALL CONFORM TO N.E.C. REQUIREMENTS FOR THE HAZARDOUS AREA CLASSIFICATION AS SHOWN

CIRCUITS AND RACEWAYS

P1357A — RACEWAY IDENTIFIER

RACEWAY EXPOSED

RACEWAY CONCEALED

RACEWAY TURNED TOWARD THE THE VIEWER.

RACEWAY TURNED DOWN

CONDUIT PLUGGED FLUSH

CONDUIT CAPPED

RC — DUCTBANK, REINFORCED CONCRETE

DB — DUCTBANK, DIRECTLY BURIED

HH23 — MANHOLE (MH) OR HANDHOLE (HH),

JB2700A (J) — JUNCTION BOX. OPTIONAL IDENTIFIER.

TB1035 (TB) — TERMINAL BOX. OPTIONAL IDENTIFIER.

1"C, 3#10 AWG + #10 AWG G — RACEWAY SIZE WITH CONDUCTOR CONTENTS AND SIZES.

GROUNDING

GROUND ROD

GROUND ROD WITH GROUND WELL

GROUND CONNECTION, BOLTED TYPE

GROUND CONNECTION, COMPRESSION TYPE

G — GROUNDING CONDUCTOR

LIGHTING

FIXTURE IDENTIFIER:

5 / XX / 2/40 — R — 8'-6

- NUMBER OF FIXTURES (SHOWN ONLY WHEN REQUIRED FOR CLARITY)
- FIXTURE TYPE. REFER TO LIGHT SPEC. TYPE APPLIES TO ALL FIXTURES OF THE SAME SHAPE WITHIN A ROOM OR AREA.
- MOUNTING:
  L = POLE R = RECESSED
  G = GROUND S = SURFACE
  P = PENDANT W = WALL
- MOUNTING HEIGHT, FLOOR TO BOTTOM OF FIXTURE UON. AHAP= AS HIGH AS POSSIBLE.
- NUMBER OF LAMPS/LAMP WATTAGE

LIGHTING FIXTURE SHAPES AND SCALE ARE REPRESENTED WHERE POSSIBLE. THE EXAMPLES SHOWN BELOW ARE TYPICAL APPLICATIONS.

FLUORESCENT FIXTURE

INCANDESCENT OR HID FIXTURE

WALL MOUNTED FIXTURE

DIRECTIONAL LIGHT

POLE MOUNTED AREA LIGHT

EMERGENCY LIGHTING UNIT. SELF CONTAINED.

EXIT SIGN. DARK QUADRANTS INDICATE FACES ILLUMINATED. DIRECTIONAL ARROWS INDICATED.

3A — CIRCUIT IDENTIFIER: WHEN SHOWN ADJACENT TO FIXTURE IDENTIFIES CIRCUIT NUMBER AND SWITCH. EXAMPLE: CIRCUIT 3, CONTROLLED BY SWITCH A.

WIRING DEVICES

SWITCHES:

UNLESS OTHERWISE NOTED, ALL SWITCHES ARE WALL MOUNTED.

$ — TOGGLE SWITCH, SINGLE POLE, 20 AMP

$ $ — GANGED SWITCHES IN COMMON BOX WITH COMMON WALL PLATE

$ A 3

- SUPERSCRIPT INDICATES CIRCUIT CONTROLLED: a, b, c, ETC. MAY BE COMBINED WITH CIRCUIT NUMBER. EXAMPLE: 1a, 4b, ETC.
- SUBSCRIPT MODIFIER INDICATES:
  2 = DOUBLE POLE
  3 = THREE WAY
  4 = FOUR WAY
  K = KEY OPERATED
  MC = MOMENTARY CONTACT, THREE POSITION
  MS = MANUAL (MOTOR) STARTER OR SWITCH
  R = RHEOSTAT (DIMMER, SPEED CONTROL)

RECEPTACLES:

UNLESS OTHERWISE NOTED, ALL RECEPTACLES ARE 125 VOLT, SINGLE PHASE, STRAIGHT BLADE, NON-LOCKING, GROUNDING STYLE.

DUPLEX RECEPTACLE, 20 AMP, 3 WIRE

RECEPTACLE MODIFIERS:

WP = WEATHER PROOF
GF = GROUND FAULT CIRCUIT INTERRUPTER
H = HAZARDOUS AREA-EXPLOSION PROOF

10-50R — SPECIAL RECEPTACLE. RATING OR NEMA CONFIGURATION AS SHOWN. EXAMPLE: NEMA 10-50R, 125/250V, 3 POLE, 3 WIRE, 50 AMP, NON-GROUNDING TYPE.

SPECIAL RECEPTACLE--- 125/250V AC, 30A, 3 POLE, 3 WIRE

RECESSED FLOOR RECEPTACLE--- ANY RECEPTACLE INSIDE A SQUARE.

SURFACE FLOOR RECEPTACLE--- ANY RECEPTACLE INSIDE A TRIANGLE.

GANGED RECEPTACLES---IN COMMON BOX, WITH COMMON WALL PLATE.

480V, 3 PHASE, 60AMP RECEPTACLE

DISTRIBUTION EQUIPMENT

APPROXIMATE SHAPE AND SCALE REPRESENTED WHERE POSSIBLE. HOWEVER, EXACT SIZE AND NUMBER OF SECTIONS IS ESTIMATED.

FLOOR-STANDING DISTRIBUTION ASSEMBLY, SUCH AS A SWITCHBOARD, TRANSFORMER, OR MOTOR CONTROL CENTER

MCC1234 — EQUIPMENT DESIGNATION (EXAMPLE)

WALL-MOUNTED DISTRIBUTION ASSEMBLY, SUCH AS PANELBOARD, MOTOR STARTER PANEL, OR TERMINAL CABINET

PBD1234 — EQUIPMENT DESIGNATION (EXAMPLE)

MOTORS AND EQUIPMENT

MOTOR STARTER, INDIVIDUAL. NOT LOCATED IN AN MCC OR SIMILAR GROUP ASSEMBLY

COMBINATION MOTOR STARTER. NOT LOCATED IN AN MCC OR SIMILAR GROUP ASSEMBLY

DISCONNECT SWITCH, NON-FUSED

F — DISCONNECT SWITCH, FUSED

(M) — M=MOTOR
SV=SOLENOID VALVE
CV=CONTROL VALVE
A=ADJUSTABLE SPEED DRIVE

FIELD INSTRUMENT

CONTROL STATION. SEE CONTROL DIAGRAMS FOR DEVICES REQUIRED

MOV — MOTOR OPERATED VALVE

TELEPHONE & COMMUNICATION SYSTEMS

UNLESS OTHERWISE NOTED, TELEPHONE OUTLETS SHALL BE MOUNTED AT SAME HEIGHT AS THE RECEPTACLES. VERIFY.

EXTERNAL LINE OR PLANT PHONE SYSTEM OUTLET

MODIFIERS:
A = ATTENDANT'S CONSOLE
F = FUTURE INSTRUMENT
J = JACK, PLUG-IN TYPE
W = WALL INSTRUMENT

SPEAKER (OUTDOOR)

(S) — SPEAKER (INDOOR)

(SD) — SMOKE DETECTOR

GENERAL NOTES:

1. THIS DRAWING IS GENERAL IN NATURE. SOME SYMBOLS SHOWN HEREON MAY NOT BE USED ON THE CONTRACT DRAWINGS.
2. SEE DRAWINGS G1, P1 AND E2 FOR ADDITIONAL SYMBOLS.
3. IDENTIFICATIONS (ID), SIZES, RATINGS, LOCATIONS AND SIMILAR INFORMATION SHOWN ASSOCIATED WITH SYMBOLS ARE OPTIONAL; EXAMPLES OF SUCH INFORMATION ARE SHOWN WITH SOME SYMBOLS FOR CLARITY.
4. THE ELECTRICAL DRAWINGS USE THE ONE-LINE DIAGRAMS AND PANEL SCHEDULES IN CONJUNCTION WITH SHOWING THE LOCATION OF THE ELECTRICAL/INSTRUMENTATION SOURCES AND LOADS/DEVICES SHOWN ON THE PLAN DRAWINGS TO DEPICT THE WORK. THE CONTRACTOR SHALL USE THESE DOCUMENTS TO DETERMINE AND PROVIDE THE NECESSARY RACEWAY AND WIRING SYSTEM FOR EACH CIRCUIT. ALL INDOOR RACEWAY SHALL BE RUN EXPOSED, AND ROUTED BY THE CONTRACTOR, UNLESS OTHERWISE NOTED. THE TYPE OF RACEWAY AND WIRE USED SHALL BE AS SPECIFIED. IN THE SPECIFICATIONS UNLESS OTHERWISE NOTED.
5. IF EQUIPMENT SUPPLIED BY MANUFACTURER HAS A LARGER LOAD THAN INDICATED ON THE ONE-LINE DIAGRAM, THE CONSTRUCTION MANAGER SHALL BE NOTIFIED. THE CABLE, CONDUIT AND ELECTRICAL EQUIPMENT SHALL BE SIZED AS REQUIRED, TO ACCOMMODATE THE HIGHER VALUE.
6. IN AREAS WHERE THERE ARE OVERHEAD BRIDGE CRANES, HOISTS, ETC., OR WHERE EQUIPMENT IS LIFTED AND MOVED FOR MAINTENANCE OR REPLACEMENT, NO CONDUITS SHALL BE RUN OVERHEAD THAT WILL INTERFERE WITH THE OPERATION OF THE EQUIPMENT.
7. THE LOCATION OF THE CONTROL STATIONS SHOWN ON THE PLAN DRAWINGS ARE DIAGRAMMATIC AND THE ACTUAL LOCATION SHALL BE COORDINATED IN THE FIELD WITH THE CONSTRUCTION MANAGER.
8. THE EXACT LOCATION OF THE MOTORS AND ACCESSORIES ARE NOT SHOWN. THE CONTRACTOR SHALL COORDINATE THE STRUCTURAL AND MECHANICAL DRAWINGS FOR CONDUIT STUBUP AND TERMINATION LOCATIONS.
9. THE CONSTRUCTION DETAILS ON DWG E3 SHALL BE USED WHERE APPLICABLE.
10. ALL EQUIPMENT SHALL BE LABELED WITH NAMEPLATES. DESCRIPTION OF EQUIPMENT SHALL BE IN ACCORDANCE WITH THE ONE-LINE DIAGRAM DESCRIPTION . ALIST OF THE NAMEPLATES SHALL BE SUBMITTED TO THE MANAGER PRIOR TOENGRAVING .
11. CONDUITS SHOWN ON THE ONE LINE DIAGRAMS ARE FOR EXPOSED LOCATIONS. CONDUITS THAT ENTER DUCT BANKS OR ARE EMBEDDED AND MAY BE LARGER.

BROWN AND CALDWELL

SUBMITTED: PROJECT MANAGER — DATE: 11-19-96
APPROVED: BROWN AND CALDWELL — DATE: 11-19-96
APPROVED: — DATE:

LINE IS 2 INCHES AT FULL SIZE (IF NOT 2"-SCALE ACCORDINGLY)

FILE 4398
DRAWN JD
DESIGNED JW
CHECKED GM
CHECKED GM

REGISTERED PROFESSIONAL ENGINEER — No. 41433 — Exp. 9-30-99 — CIVIL — STATE OF CALIFORNIA

EXP: 9-30-98

REVISIONS

ZONE	REV.	DESCRIPTION	BY	DATE	APP.

CITY OF ANTIOCH, CALIFORNIA

RIVER PUMPING STATION EXPANSION - PHASE II

SYMBOLS 1

SCALE: AS SHOWN
DRAWING NUMBER: E1
SHEET NUMBER: 10

4398E1 11-15-96 JamahdD

CONTROL DIAGRAM SYMBOLS

GENERAL

- ENCLOSURE BOUNDARY
- CONDUCTORS CONNECTED
- CONDUCTORS NOT CONNECTED
- TERMINAL POINT FOR EXTERNAL CONNECTIONS

TRANSFORMERS

- 120V / 120V — CONTROL TRANSFORMER. PRIMARY AND SECONDARY VOLTAGES SHOWN. SIZE AS SHOWN OR SPECIFIED.
- 50/5 — CURRENT TRANSFORMER. PRIMARY/ SECONDARY TURNS RATIO SHOWN.
- 50/5 — CURRENT TRANSFORMER – WINDOW TYPE. PRIMARY /SECONDARY TURNS RATIO SHOWN

DISCONNECTS AND OVERCURRENT DEVICES

- 40A — CIRCUIT BREAKER, THERMAL–MAGNETIC, 3 POLE, UON. RATING IN AMPS
  MODIFIERS:
  - /M MAGNETIC ONLY
  - /2 POLES, IF OTHER THAN 3
  - /AF AMP FRAME
  - /AT AMP TRIP
  - /AS AMP SENSOR
- ID — FUSE
  MODIFIERS:
  - CLF = CURRENT LIMITING FUSE
  - DE = DUAL ELEMENT
  - F = CLASS F
- NEON BLOWN FUSE INDICATOR

PUSHBUTTONS

- ID / DESCPTN — PUSHBUTTON, MOMENTARY CONTACT, NORMALLY OPEN
- ID / DESCPTN — PUSHBUTTON, MOMENTARY CONTACT, NORMALLY CLOSED
- ID / DESCPTN — PUSHBUTTON WITH MUSHROOM HEAD, EMERGENCY STOP, MAINTAINED CONTACT

SELECTOR SWITCHES

- ID #1 #2 — 2 POSITION MAINTAINED CONTACT X = CONTACTS CLOSED
- ID O H A — 3 POSITION MAINTAINED CONTACT X = CONTACTS CLOSED
- ID #1 #2 — 2 POSITION SPRING RETURNED TO RIGHT X = CONTACTS CLOSED

INPUT SWITCHES

NORMALLY OPEN	NORMALLY CLOSED	INITIATING VARIABLE
		POSITION (LIMIT)
		FLOW
		TEMPERATURE
		PRESSURE
		LEVEL
		FORCE OR TORQUE
		SPEED

CONTROL RELAYS

- 2 CR / FUNCTION — OPERATING COIL
  - CR = CONTROL RELAY
  - U = UNLATCH
  - L = LATCH
- OL — THERMAL OVERLOAD RELAY
- 2CR 2CR — OUTPUT CONTACTS

TIMING RELAYS

- 2 TR — OPERATING COIL

ON or OFF DELAY
RANGE:SEC/MIN
SET:SEC/MIN

NORMALLY OPEN	NORMALLY CLOSED	
3TR OR TC	3TR OR TO	DELAY ON COIL ENERGIZATION (ON DELAY)
3TR OR TO	3TR OR TC	DELAY ON COIL DE–ENERGIZATION (OFF DELAY)

CONTACTORS

- ID C — OPERATING COILS
  - C = CONTACTOR, LIGHTING OR GENERAL USE
  - F = FAST OR FORWARD
  - M = MAIN OR LINE
  - 1M = FIRST MAIN OR WYE
  - 2M = SECOND MAIN OR DELTA
  - R = RUN OR REVERSE
  - S = SLOW OR START
- ID / SIZE — MAIN CONTACTS

OUTPUT LOADS AND DEVICES

- MTR — MOTOR
- 50W — SPACE HEATER. WATTAGE SHOWN
- MAGNETIC COIL
- SV — SOLENOID
- H — HOUR METER (ELAPSED TIME)
- KIC — TIME CONTROLLER

INDICATING LIGHTS

INDICATING LIGHTS
L = LENS COLOR:
- A = AMBER
- B = BLUE
- G = GREEN
- R = RED
- W = WHITE

- LINE / LEGEND — PUSH TO TEST. TEST VOLTAGE TERMINAL SHOWN

MISCELLANEOUS

- HORN
- OHMS / RES — RESISTOR
- RECTIFIER
- SURGE OR ARC SUPRESSOR
- TRIAC
- CAPACITOR
- CONNECTOR PLUG
- GROUND CONNECTION
- POTENTIOMETER
- BUS DUCT
- BATTERY
- SHIELDED CABLE
- ▲ LOCATED IN THE FIELD

ONE LINE DIAGRAM SYMBOLS

- S2 — SIZE 2 COMBINATION FULL VOLTAGE NON–REVERSING MAGNETIC STARTER MCP SIZED BY MANUFACTURER (OVERLOAD RELAY NOT SHOWN)
  RV = REDUCED VOLTAGE
  2S2W = TWO–SPEED TWO–WINDING
  S2 = SIZE 2
- MCA–22: 3#8,#10G,2"C — CIRCUIT NO. MCA–22 IS ORIGINATING IN MCCA, WITH 3#8 INSULATED CONDUCTORS AND 1 #10 BARE GROUND WIRE ALL IN 2" CONDUIT TO 20HP MOTOR. LOADS ARE INDICATED IN HP OR KW.
- 20 MOTOR–TYP / 5 KW — PACKAGED EQUIPMENT–TYP
- POWER AND CONTROL TO A PACKAGE UNIT, SHALL IMPLY THAT ANY AND ALL ASSOCIATED EQUIPMENT SHALL ALSO BE INSTALLED AND WIRED AS REQUIRED
- 15
- INDICATES THAT ALL OR PART OF CIRCUIT MAY BE ROUTED IN DUCTBANK OR UNDERGROUND. CONDUIT SIZE SHOWN ON ONE–LINE IS ABOVE GROUND AND/OR INSIDE OF STRUCTURE. SEE DUCTBANK SCHEDULE AND SECTIONS FOR CONDUIT SIZE OF UNDERGROUND PORTION OF CIRCUIT.
- SURGE PROTECTOR
- LIGHTNING ARRESTOR AND GROUND
- PORTABLE CABLE
- INCOMING LINE
- 200A — DISCONNECT OR ISOLATING SWITCH 200 AMP SHOWN
- 100F — FUSE. 100 AMP CLASS "F" SHOWN
- 100 KVA 13.2 KV / 5.75% Z 480/277V — POWER TRANSFORMER. VOLTAGES, SIZE, IMPEDANCE SHOWN
- 1.5 KVA 120V / 2.5% 240/120V — ISOLATION TRANSFORMER. VOLTAGES, SIZE, IMPEDANCE SHOWN
- 4.16 KV (3) / 120 V — POTENTIAL TRANSFORMER. PT QUANTITY (3) AND VOLTAGES SHOWN
- 400/5 (3) — CURRENT TRANSFORMER. CT QUANTITY (3) AND 400:5 TURNS RATIO SHOWN
  WINDING CONFIGURATIONS:
  - DELTA
  - WYE (GROUNDED)
- 600KW 60HZ — 480V 3ø, 4W — GENERATOR. POWER RATING, FREQUENCY, VOLTAGE, GROUNDED WYE WINDING SHOWN
- K — KIRK KEY INTERLOCK
- 15A — THERMAL MAGNETIC CICUIT BREAKER

MAIN CONTACTS

- M — AIR BREAK CONTACTOR

NOTES:

1. THIS DRAWING IS GENERAL IN NATURE. SOME SYMBOLS SHOWN HEREON MAY NOT BE USED ON THE CONTRACT DRAWINGS.
2. SEE DRAWINGS G1, P1 AND E1 FOR ADDITIONAL SYMBOLS AND NOTES.
3. IDENTIFICATIONS (ID), SIZES, RATINGS, LOCATIONS AND SIMILAR INFORMATION SHOWN ASSOCIATED WITH SYMBOLS ARE OPTIONAL; EXAMPLES OF SUCH INFORMATION ARE SHOWN WITH SOME SYMBOLS FOR CLARITY.

BROWN AND CALDWELL

SUBMITTED: PROJECT MANAGER DATE: 11-19-96
APPROVED: BROWN AND CALDWELL DATE: 11-19-96
APPROVED: DATE:

LINE IS 2 INCHES AT FULL SIZE (IF NOT 2"–SCALE ACCORDINGLY)

FILE 4398
DRAWN JD
DESIGNED JW
CHECKED GM
CHECKED GM

REGISTERED PROFESSIONAL ENGINEER — EXP: 9-30-99
EXP: 9-30-98

REVISIONS

ZONE	REV.	DESCRIPTION	BY	DATE	APP.

CITY OF ANTIOCH, CALIFORNIA

RIVER PUMPING STATION EXPANSION - PHASE II

SYMBOLS 2

SCALE: AS SHOWN
DRAWING NUMBER: E2
SHEET NUMBER: 11

11-15-96 JamshidD 1=1 4398E2

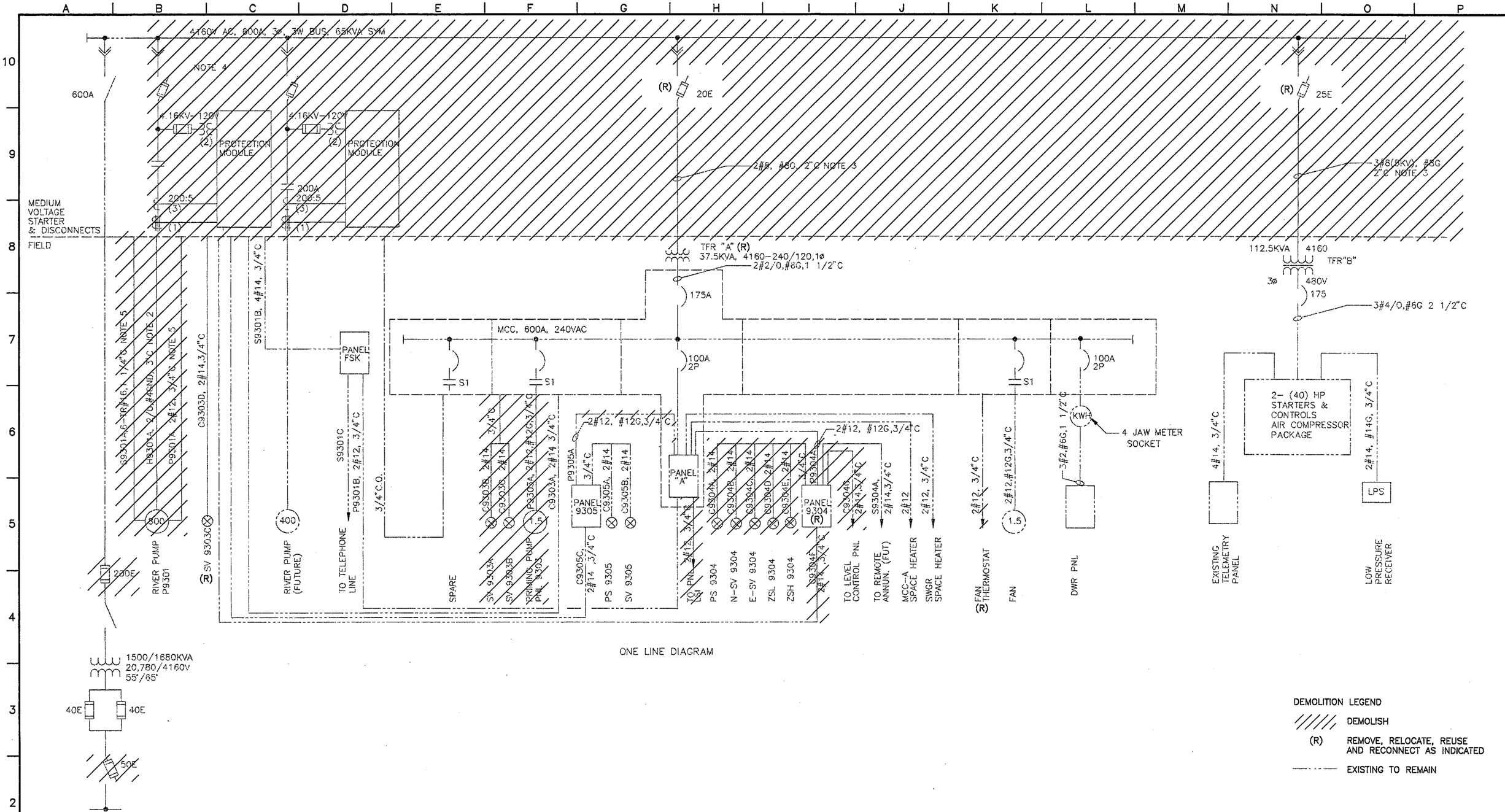

BROWN AND CALDWELL

SUBMITTED: [signature] PROJECT MANAGER DATE: 11-19-96
APPROVED: [signature] BROWN AND CALDWELL DATE: 11-19-96
APPROVED: DATE:

LINE IS 2 INCHES AT FULL SIZE (IF NOT 2"-SCALE ACCORDINGLY)

FILE 4398
DRAWN JD
DESIGNED JW
CHECKED GM
CHECKED GM

REGISTERED PROFESSIONAL ENGINEER No. 41433 Exp 9-30-99 CIVIL STATE OF CALIFORNIA

EXP: 9-30-98

REVISIONS

ZONE	REV.	DESCRIPTION	BY	DATE	APP.

CITY OF ANTIOCH, CALIFORNIA

RIVER PUMPING STATION EXPANSION - PHASE II

DEMOLITION ONE-LINE DIAGRAM

SCALE AS SHOWN
DRAWING NUMBER E3
SHEET NUMBER 12

4398E3 11-15-96 JamshidD

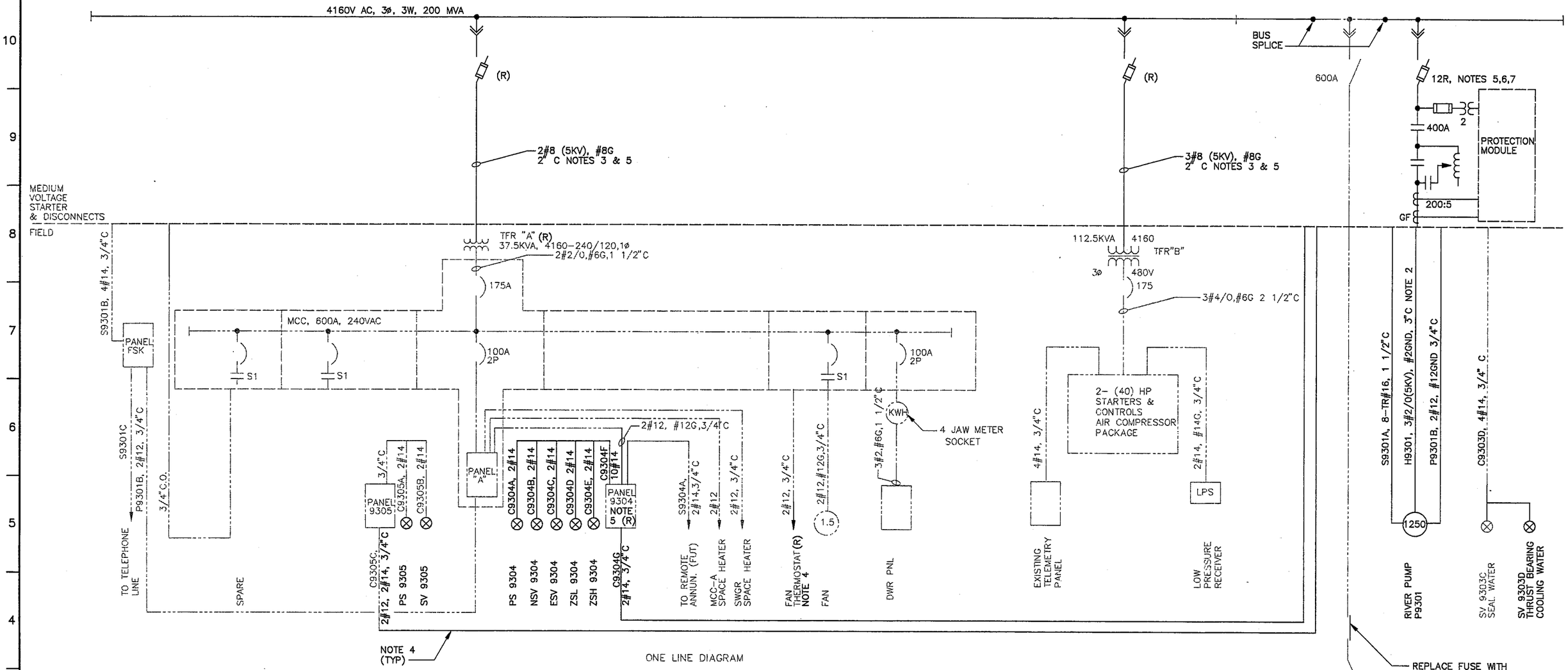

ONE LINE DIAGRAM

NOTES:

1. NOT USED
2. CABLE SHALL BE OKONITE # 114-24-2327 5KV, 1-CONDUCTOR EPR INSULATED, UNSHIELDED TYPE.
3. CABLE SHALL BE OKONITE # 114-24-2313 5KV, 1-CONDUCTOR EPR INSULATED, UNSHIELDED TYPE.
4. CONTRACTOR MAY USE EXISTING CONDUITS WHERE POSSIBLE. HOWEVER, NEW CONDUCTORS SHALL BE PROVIDED FROM SOURCE TO TERMINATION.
5. ACTUAL FUSE SIZE TO BE DETERMINED BY STARTER MANUFACTURER.
6. REDUCED VOLTAGE AUTOTRANSFORMER TYPE MEDIUM VOLTAGE STARTER.
7. PROVIDE 3 SPARE FUSE LINKS TO OWNER.

MODIFICATION LEGEND

------	EXISTING
———	NEW
(R)	RELOCATED

BROWN AND CALDWELL

SUBMITTED: PROJECT MANAGER DATE: 11-19-96
APPROVED: BROWN AND CALDWELL DATE: 11-19-96
APPROVED: DATE:

LINE IS 2 INCHES AT FULL SIZE (IF NOT 2"-SCALE ACCORDINGLY)

FILE	4398
DRAWN	JD
DESIGNED	JW
CHECKED	GM
CHECKED	GM

REGISTERED PROFESSIONAL ENGINEER ALLEN MEYNERSTEN No. 41433 Exp. 9-30-99 CIVIL STATE OF CALIFORNIA

REGISTERED PROFESSIONAL ENGINEER ELECTRICAL STATE OF CALIFORNIA Exp. 9-30-98

REVISIONS

ZONE	REV.	DESCRIPTION	BY	DATE	APP.

CITY OF ANTIOCH, CALIFORNIA

RIVER PUMPING STATION
EXPANSION - PHASE II

MODIFICATION
ONE-LINE DIAGRAM

SCALE: AS SHOWN
DRAWING NUMBER: E4
SHEET NUMBER: 13

4398E4 11-15-96 JomsfldD 1=1

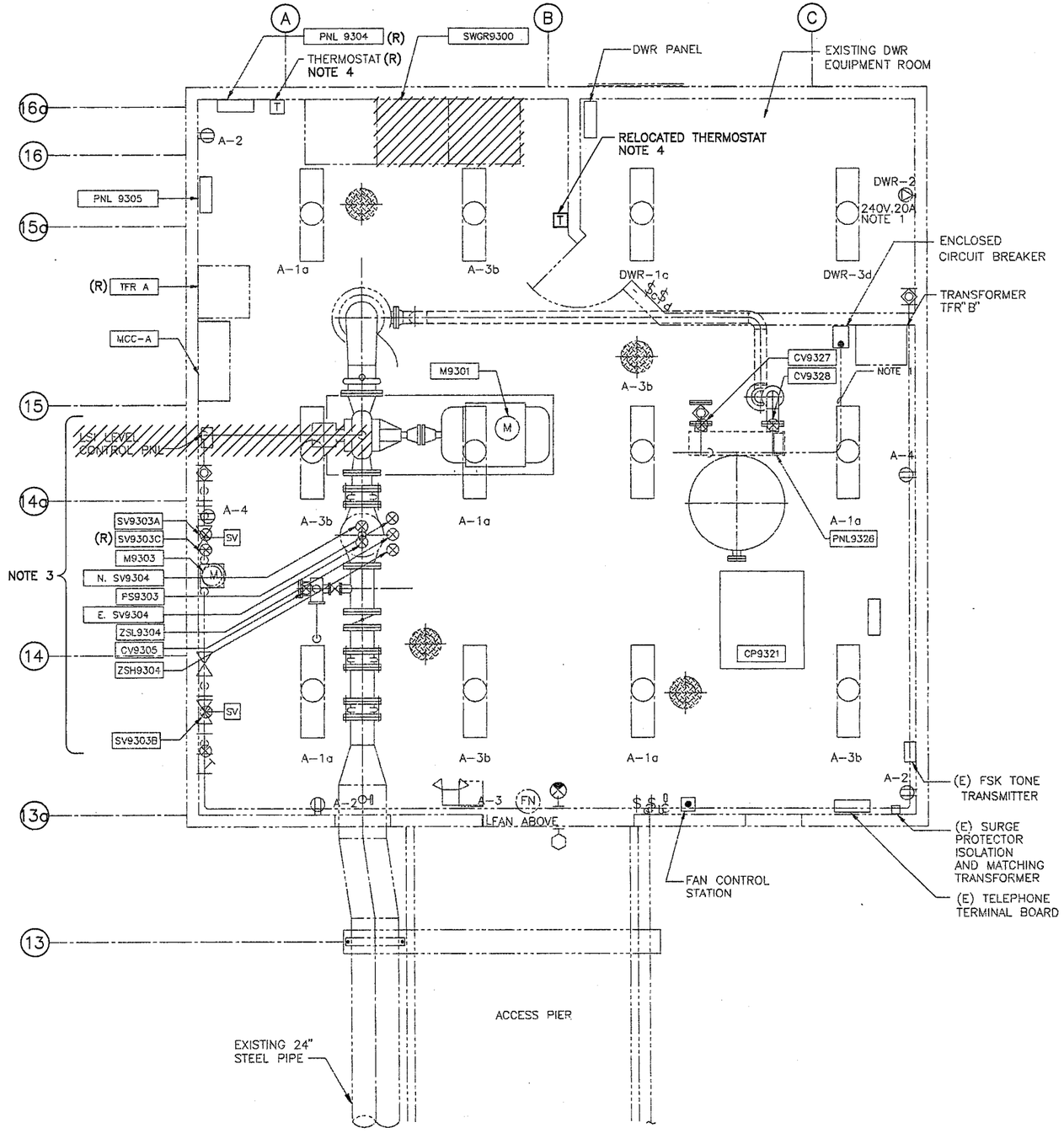

FLOOR PLAN

SCALE: 3/8"=1'-0"

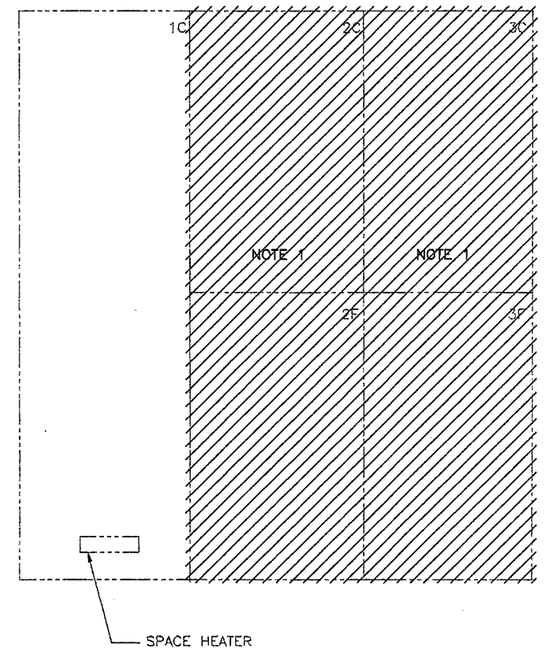

1C INCOMING LINE

2C TRANSFORMER B FEEDER

2F RIVER PUMP P9301

3C TRANSFORMER A FEEDER

3F FULLY EQUIPPED SPACE

EXISTING SWITCHGEAR FRONT ELEVATION

NOTES

1. FUSED SWITCHES TO BE REUSED.
2. SEE DWG E3 FOR DEMOLITION LEGEND.
3. SEE DWG E3 FOR DEMOLITION REQUIREMENTS.
4. EXTEND CONDUIT TO NEW LOCATION WITH NEW 2#12 FROM SOURCE.

BROWN AND CALDWELL

SUBMITTED: [signature] PROJECT MANAGER DATE: 11-19-96

APPROVED: [signature] BROWN AND CALDWELL DATE: 11-19-96

APPROVED: DATE:

LINE IS 2 INCHES AT FULL SIZE (IF NOT 2"-SCALE ACCORDINGLY)

FILE 4398

DRAWN JD

DESIGNED JW

CHECKED GM

CHECKED GM

REGISTERED PROFESSIONAL ENGINEER ALDEN MEMENGAMEN No. 41433 Exp. 9-30-99 CIVIL STATE OF CALIFORNIA

REGISTERED PROFESSIONAL ENGINEER ELECTRICAL STATE OF CALIFORNIA EXP: 9-30-98

REVISIONS

ZONE	REV.	DESCRIPTION	BY	DATE	APP.

CITY OF ANTIOCH, CALIFORNIA

RIVER PUMPING STATION EXPANSION - PHASE II

DEMOILITION PLAN

SCALE AS SHOWN

DRAWING NUMBER E5

SHEET NUMBER 14

4398E5 11-15-96 JamshidD

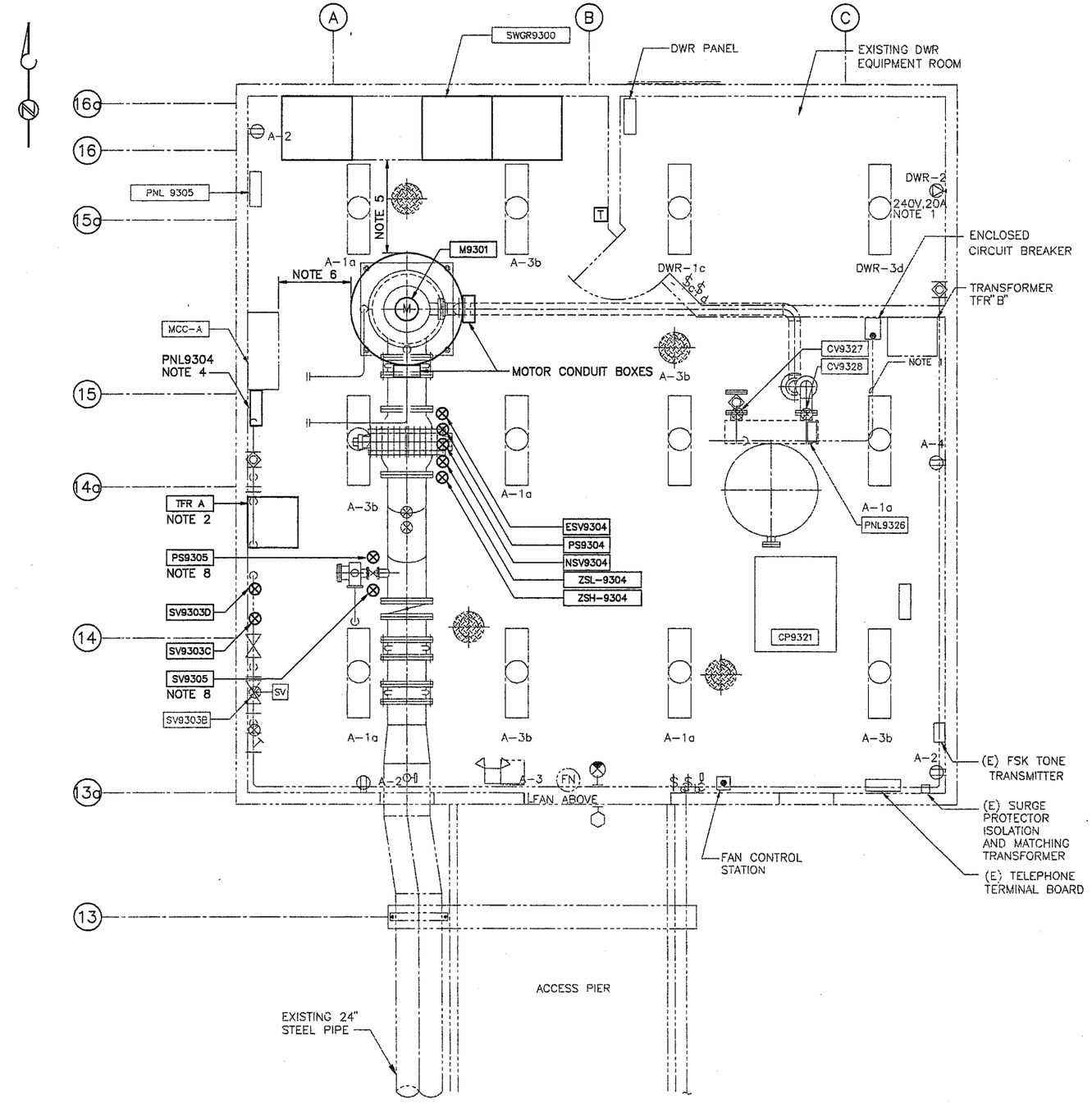

FLOOR PLAN

SCALE: 3/8"=1'-0"

NOTES

1. ROUTE CONDUIT TO COMPRESSOR UNIT ALONG THE SIDE AND ABOVE THE TANK .
2. RELOCATE TFR-A AS INDICATED. EXTEND CONDUIT TO NEW LOCATION AND PULL NEW CONDUCTORS FROM SOURCE.
3. CONNECT NEW SPACE HEATERS TO EXISTING.
4. RELOCATE PNL 9304 AS INDICATED.
5. MAINTAIN 4'-0 WORK SPACE IN FRONT OF SWGR 9300.
6. MAINTAIN 3'-0 WORK SPACE IN FRONT OF MCC-A.
7. REFER TO ONE LINE DIAGRAM ON E4 FOR FEEDER SIZES.
8. RECONNECT EXISTING CONDUIT AND WIRING TO NEW DEVICES.

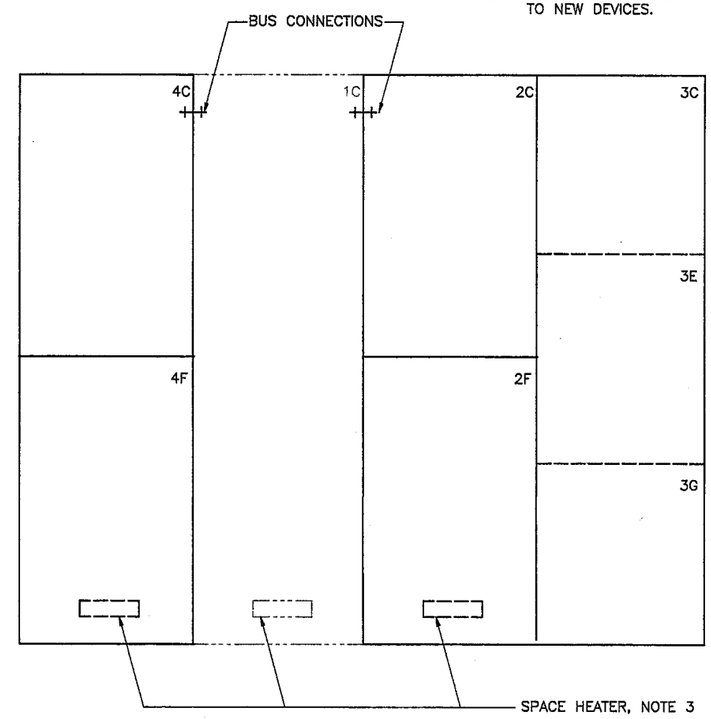

1C EXISTING INCOMING LINE
2C BLANK
2F MAIN CONTACTOR
3C START CONTACTOR
3E RUN CONTACTOR
3G AUTOTRANSFORMER
4C RELOCATED FUSED SWITCH FROM 2C-"TRANSFORMER B"
4F RELOCATED FUSED SWITCH FROM 3C-"TRANSFORMER A"

EXISTING SWITCHGEAR FRONT ELEVATION

BROWN AND CALDWELL

SUBMITTED: PROJECT MANAGER DATE: 11-19-96
APPROVED: BROWN AND CALDWELL DATE: 11-19-96
APPROVED: DATE:

LINE IS 2 INCHES AT FULL SIZE (IF NOT 2"-SCALE ACCORDINGLY)

FILE 4398
DRAWN JD
DESIGNED JW
CHECKED GM
CHECKED GM

REGISTERED PROFESSIONAL ENGINEER No. 41433 Exp. 9-30-99 CIVIL STATE OF CALIFORNIA

REGISTERED PROFESSIONAL ENGINEER ELECTRICAL STATE OF CALIFORNIA EXP. 9-30-98

REVISIONS

ZONE	REV.	DESCRIPTION	BY	DATE	APP.

CITY OF ANTIOCH, CALIFORNIA

RIVER PUMPING STATION EXPANSION - PHASE II

MODIFICATION PLAN

SCALE: AS SHOWN

DRAWING NUMBER: E6

SHEET NUMBER: 15

11-15-96 JamshidD

4398E6

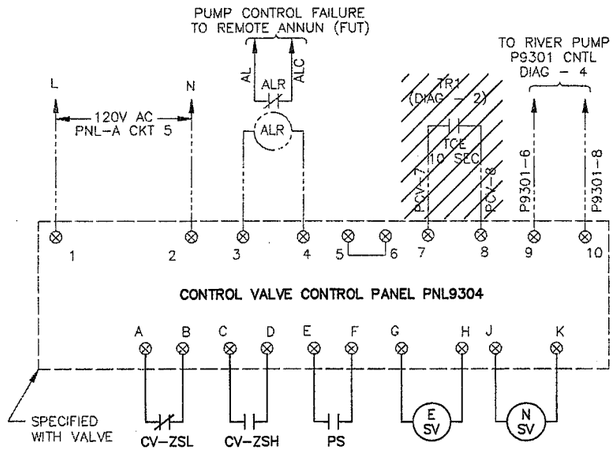

DIAGRAM 3

RIVER PUMP CONTROL VALVE CV9304 CONTROLS

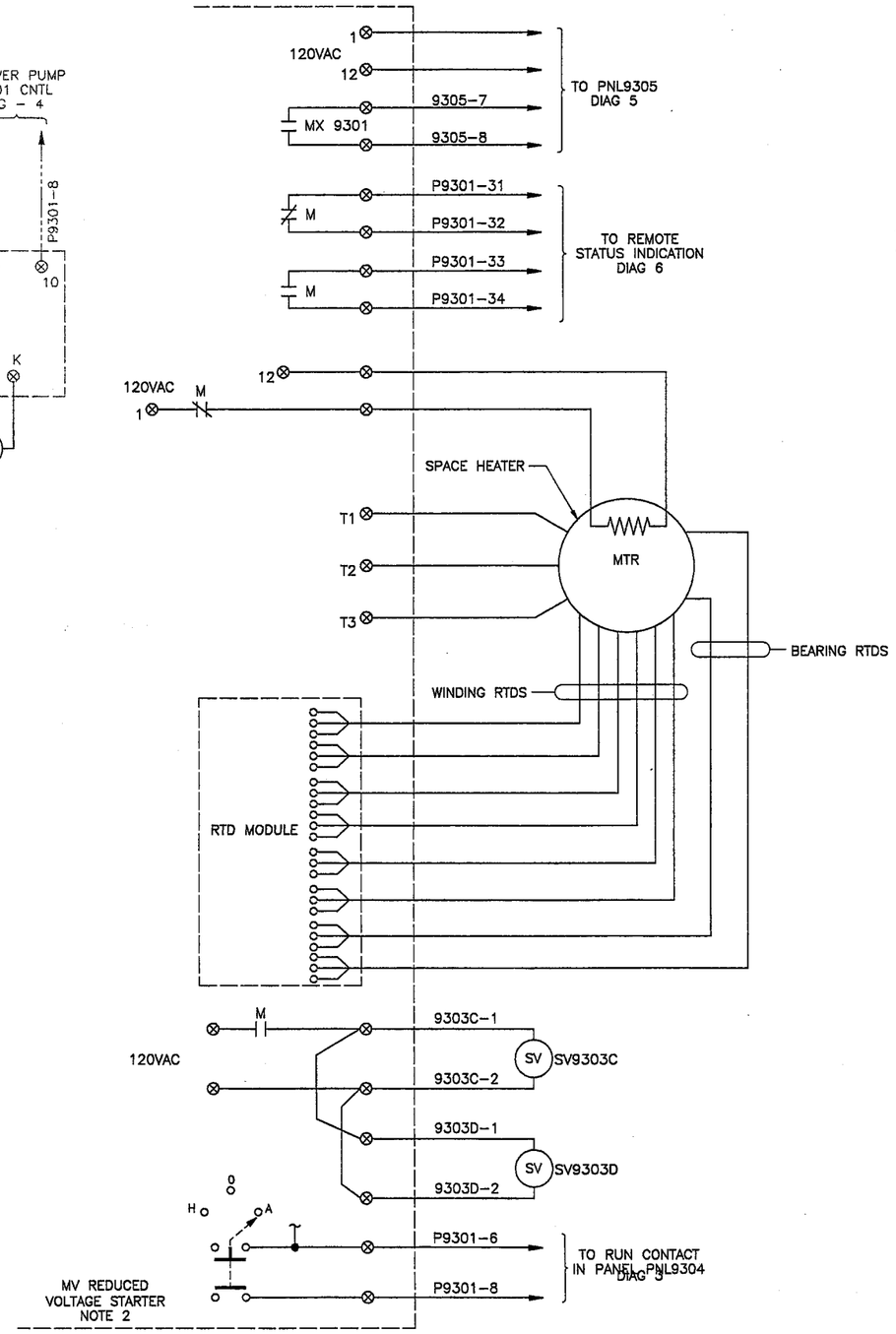

DIAGRAM 4

RIVER PUMP 9301

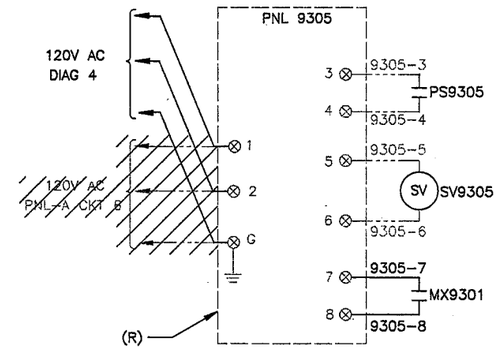

DIAGRAM 5

SURGE ANTICIPATOR CONTROL

NOTES:

1. DIAGRAM NUMBERS CARRIED OVER FROM PREVIOUS PROJECTS.
2. REFER TO VENDOR DRAWINGS FOR REMAINDER OF CONTROL DIAGRAM.

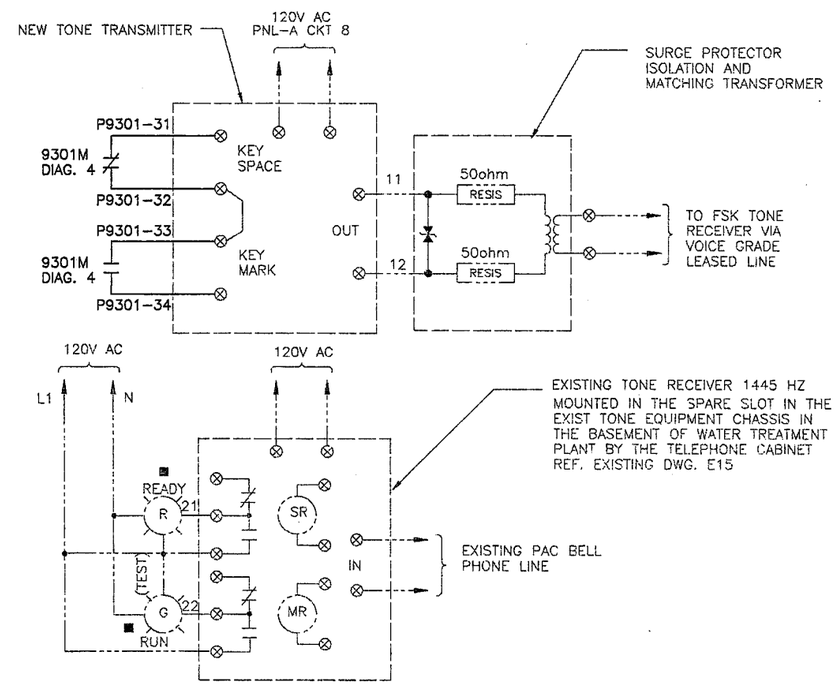

DIAGRAM 6

RIVER PUMP REMOTE STATUS
TRANSMISSION AND INDICATION

BROWN AND CALDWELL

SUBMITTED: DATE: 11-19-96
APPROVED: PROJECT MANAGER DATE: 11-19-96
BROWN AND CALDWELL
APPROVED: DATE:

LINE IS 2 INCHES AT FULL SIZE (IF NOT 2"-SCALE ACCORDINGLY)

FILE 4398
DRAWN JD
DESIGNED JW
CHECKED GM
CHECKED GM

REGISTERED PROFESSIONAL ENGINEER ALBERTO MEDINA-SHEN No. 41433 Exp. 9-30-99 CIVIL STATE OF CALIFORNIA

REGISTERED PROFESSIONAL ENGINEER JOHN W. MILLER No. 1 ELECTRICAL STATE OF CALIFORNIA
EXP: 9-30-98

REVISIONS					
ZONE	REV.	DESCRIPTION	BY	DATE	APP.

CITY OF ANTIOCH, CALIFORNIA

RIVER PUMPING STATION
EXPANSION - PHASE II

CONTROL DIAGRAMS

SCALE: AS SHOWN
DRAWING NUMBER: E7
SHEET NUMBER: 16

11-15-96 JonaldJD
4398E7

Appendix K

Sample City Use Agreement

CONSTRUCTION STAGING RIGHT OF ENTRY AGREEMENT

This **CONSTRUCTION STAGING RIGHT OF ENTRY AGREEMENT** (hereinafter "Right of Entry" or "Agreement") is made on this 25 day of March, 2020 between the **City of Antioch**, (hereinafter "City"), and Redgwick Construction Co., (hereinafter "Contractor"), collectively the "Parties," subject to the following terms, conditions and restrictions:

RECITALS

A. The City is the owner of certain real property in the County of Contra Costa, California located at the intersection of L St. and Claudia Ct. and further identified by Assessors Parcel Number(s) (APNs) 067-341-027 (hereinafter the "Property").

B. Contractor and/or its agents seek to enter the Property for the purpose of using the Property as a staging area during the course of construction on the Caltrans Project 04-3Q0504 ("Project").

C. Subject to the covenants and conditions set forth below, the Parties desire to enter into this Agreement to provide Contractor, its employees and agents, including, without limitation, Contractor and its general contractor and/or subcontractors with access for the purposes and subject to the terms, conditions and restrictions set forth in this Right of Entry.

NOW, THEREFORE, it is agreed as follows:

1. Right of Entry. City hereby grants a Right of Entry to Contractor, its employees and agents including Contractor's general contractor and/or subcontractors onto the Property, subject to all licenses, easements, encumbrances and claims of title affecting the Property, for the purposes and subject to the terms, conditions and restrictions set forth in this Right of Entry.

A. The nature and scope of activities on the Property shall be those reasonably necessary for construction staging of equipment for use during and while the Project is ongoing and as subject to the terms, conditions and restrictions set forth in this Right of Entry.

B. Contractor and/or its general contractor and/or subcontractors shall return the Property to the City in substantially the same condition as it was before Contractor and/or its general contractor or subcontractors' activities – this obligation shall survive expiration or termination of this Agreement. No additional activities shall be conducted on the Property unless and until Contractor secures City's written consent thereto.

C. In performing the above-mentioned activities, Contractor and/or its general contractor and/or subcontractors shall use their best efforts to minimize any adverse impacts to the City and will seek to minimize, as is reasonably possible, any disturbance to the remainder of City's parcel and to repair and/ or replace all hard and soft landscapes as may be impacted by the activities described above.

D. This Right of Entry shall be effective from March 25,2020 to May 31, 2020 unless extended in writing by the City. The Property is to be restored and vacated by May 31, 2020 , unless otherwise approved in writing by the City.

E. The City reserves the right to be present for observation during the activities described herein.

F. In consideration for Contractor's use of the Property under this Agreement, Contractor shall remit payment of [INSERT AMOUNT] to City within 30 calendar days of execution of this Agreement.

2. Indemnification. Contractor and/or its general contractor and/or subcontractors will indemnify, defend and hold the City and its officials, officers, employees and agents harmless from any and all liability for bodily injury, death and property damage arising out of or in any way connected with Contractor's and/or its contractors entry on and use of the Property, and reimburse the City for all costs, expenses and loss, including attorney's fees, incurred by it in consequence of any claims, demands and causes of action which may be made or brought against it arising out of Contractor's and/or its contractors entry on and/or use of the Property. In the event that the Property is disturbed for any reason, it will be returned to its pre-existing condition, at the sole expense of Contractor and/or its contractors. This obligation shall survive expiration or termination of this Agreement.

3. Insurance. Contractor shall not commence work pursuant to this Agreement until Contractor and/or its general contractor and/or subcontractors, including all persons performing said improvements or activities, have obtained all insurance required hereunder in a company or companies qualified to do business in the State of California and acceptable to the City. In addition, Contractor shall not allow any subcontractor to commence work on its subcontract until such subcontractor has obtained the same insurance coverage required of Contractor's general contractor under this Agreement and until such insurance policies have been approved by the City.

A. Contractor and/or its general contractor and/or subcontractors shall procure and maintain for the duration of this Agreement, insurance against claims for injuries or damages to Property, which may arise from or in connection with the work by Contractor, its agents, representatives, employees or subcontractors. The cost of such insurance shall be borne by Contractor and/or its general contractor and/or subcontractors.

B. Minimum Scope of Insurance: coverage shall at least be as broad as:

1) Insurance Services Office Commercial General Liability Coverage (Occurrence Form No. CG0001 (11/88 Revisions)).

2) Insurance Services Office Form No. CA-0001 (12/90 revisions) covering Automobile Liability.

3) Worker's Compensation coverage, as required by the Labor Code of the State of California and Employer's Liability Coverage.

C. Minimum limits of insurance:

1) Comprehensive General Liability: $1,000,000 combined single limit for each occurrence of Bodily Injury, Personal Injury and Property Damage, and $2,000,000 Aggregate Total Bodily Injury and Property Damage.

2) Automobile Liability: $1,000,000 combined single limit per accident for Bodily Injury and Property Damage.

3) Excess Liability per this Agreement: (e.g., exceeding $50,000) $3,000,000 Bodily and Property Damage.

4) Worker's Compensation and Employer's Liability: Worker's Compensation limits as required by the Labor Code of the State of California and Employer's Liability limits of not less than $1,000,000 per accident.

D. Deductibles or self-insurance: Any and all deductibles or self-insured retention must be declared to and approved by the City. At the option of the City either: the insurer shall reduce or eliminate such deductibles or self-insured retention as they relate to the City, its officers, agents, employees, and consultants; or Contractor and/or its general contractor and/or subcontractors shall procure a bond guaranteeing payment of losses and related investigation, claim administration, and defense expenses.

E. Hold harmless (indemnity) agreement: Contractor and/or its general contractor and/or subcontractors shall take all responsibility for the work, shall bear any and all losses and damages directly or indirectly resulting from Contractor, to any third party, to any sub-lessee, to the City, its representatives, their officials, directors, officers, agents, and employees due to the performance or character of the work, unforeseen difficulties, accidents, occurrences, or other causes. Contractor and/or its general contractor and/or subcontractors shall assume the defense costs of and hold harmless the City, its representatives, and their officers, directors, agents, employees and consultants from all claims loss, damage, injury, and liability of every kind, nature, and description directly and indirectly arising from the performance of the work. Approval of the insurance contracts does not relieve Contractor, general or subcontractors from liability under this hold harmless clause.

F. All insurance policies shall be issued by acceptable insurance companies, as determined by the City, which: 1) are qualified to do the business of insurance in California, 2) maintain an agent for service of process within the State, and 3) are rated not less than "A VII" according to the latest Best's Key Rating Guide.

4. Other Contractor and/or its General and/or Subcontractors Insurance Provisions. The policies specified herein are to contain or be endorsed to contain the following provisions:

A. The City, its representatives and their consultants, directors, officers, agents, and employees, consultants, and volunteers are to be covered as additional insureds as respects: Liability arising out of the activities performed by or on behalf of Contractor; products and completed operations of Contractor and/or its general contractor or subcontractors, premises owned, leased, or used by Contractor and/or its general contractor or subcontractors; or automobiles owned, leased, hired, or borrowed by Contractor and/or its general contractor and/or subcontractors.

B. Contractor and/or its general contractor and/or subcontractors insurance coverage shall be primary insurance as respects the City, its representatives and their directors, officers, agents, employees, consultants, and authorized volunteers. Any insurance or self-insurance maintained by the City, its representatives and their directors, officers, employees, consultants, or volunteers shall be in excess of Contractor and/or its general contractor and/or subcontractors insurance and shall not contribute to it.

C. Any failure to comply with the reporting provisions of the policy shall not affect coverage provided to the City, its representatives and their directors, officers, agents, employees, consultants, and volunteers.

5. All Coverage. Each insurance policy required by the Agreement shall be endorsed to state that coverage shall not be suspended, voided, canceled by either party, reduced in coverage or in limits except after thirty (30) days prior to written notice by certified mail, return receipt requested, has been given to the City.

6. Proof of Insurance. Contractor and/or its general contractor and/or subcontractors, prior to starting work on the City's property, shall present the original policies of insurance required by this Section, or present a certificate of the insurance company, showing the issuance of such insurance and the additional insureds and other provisions required herein.

7. Certificate of Insurance. Contractor and/or its general contractor and/or subcontractors shall, at least thirty (30) days prior to the expiration of any insurance policy required by this Agreement, file a signed and completed "Certificate of Insurance" (listing all policy endorsements and provisions called for by this Agreement) with the City stating that such insurance policy has been renewed or extended.

8. Integration. This Agreement contains the entire understanding between the parties relating to the transaction contemplated by this Agreement, notwithstanding any previous

negotiations or agreements between the parties or their predecessors in interest with respect to all or any part of the subject matter hereof. All prior or contemporaneous agreements, shall be of no further force or effect. Each party is entering this Agreement based solely upon the representations set forth herein and upon each party's own independent investigation of any and all facts such party deems material.

9. Incorporation of Recitals. The matters set forth in the recitals set forth above are hereby incorporated into and made a part of this Agreement.

10. Modifications. Any alteration, change or modification of or to this Agreement, in order to become effective, shall be made in writing and in each instance signed on behalf of each party.

11. Choice of Law; Venue. This Agreement is governed by the laws of the State of California. Venue shall be in a court of competent jurisdiction situated in Contra Costa County, California.

12. Termination. City may terminate this Right of Entry for cause arising out Contractor's material breach upon 10 calendar days written notice and opportunity to cure. Upon termination, any rights Contractor and/or its general contractor or subcontractors may have to enter upon the Property for any purpose described in this Right of Entry shall expire and terminate at said time and date.

IN WITNESS WHEREOF, the parties have executed this instrument the day and year first written above.

CITY OF ANTIOCH:

By: _____

Title: _____

Date: _____

Redgwick Construction Co.:

By: Travis Miller

Title: Vice President

Date: 03.25.2020

APPENDIX L

RIVER PUMP STATION SITE

SOIL AND GROUNDWATER DATA
AND
DELTA DIABLO SEWER DISCHARGE APPLICATION

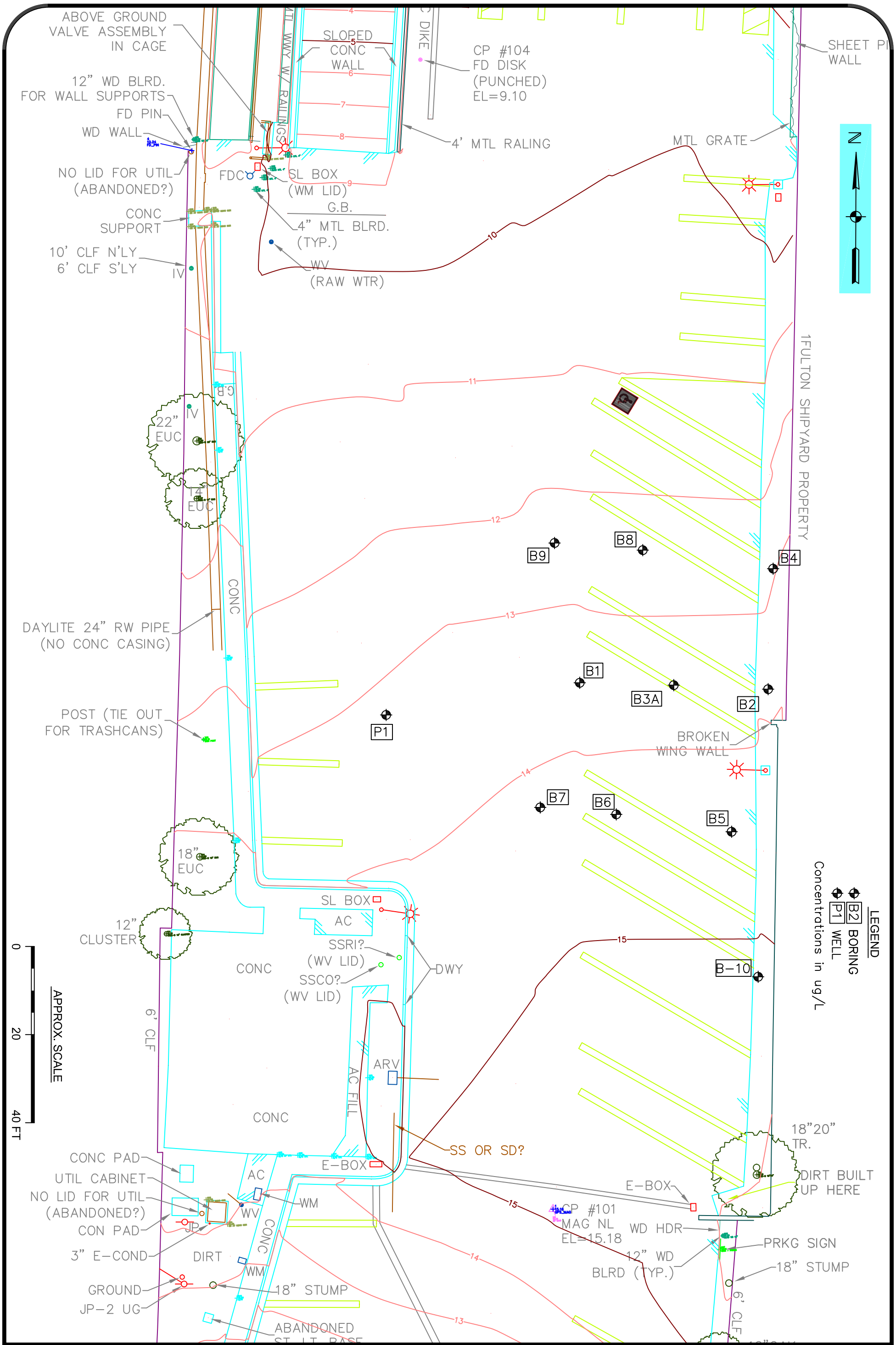

Cook Environmental Services, Inc.
271 Las Juntas Way
Walnut Creek, CA 94597
(925) 478-8390 work
(925) 787-6869 cell
tcook@cookenvironmental.com

Boring Locations
Antioch Marina
Fulton Shipyard Rd., Antioch, CA

Project: 1206	Figure: 2
Date: 2/12/2020	
Scale: 1" = 20 '	

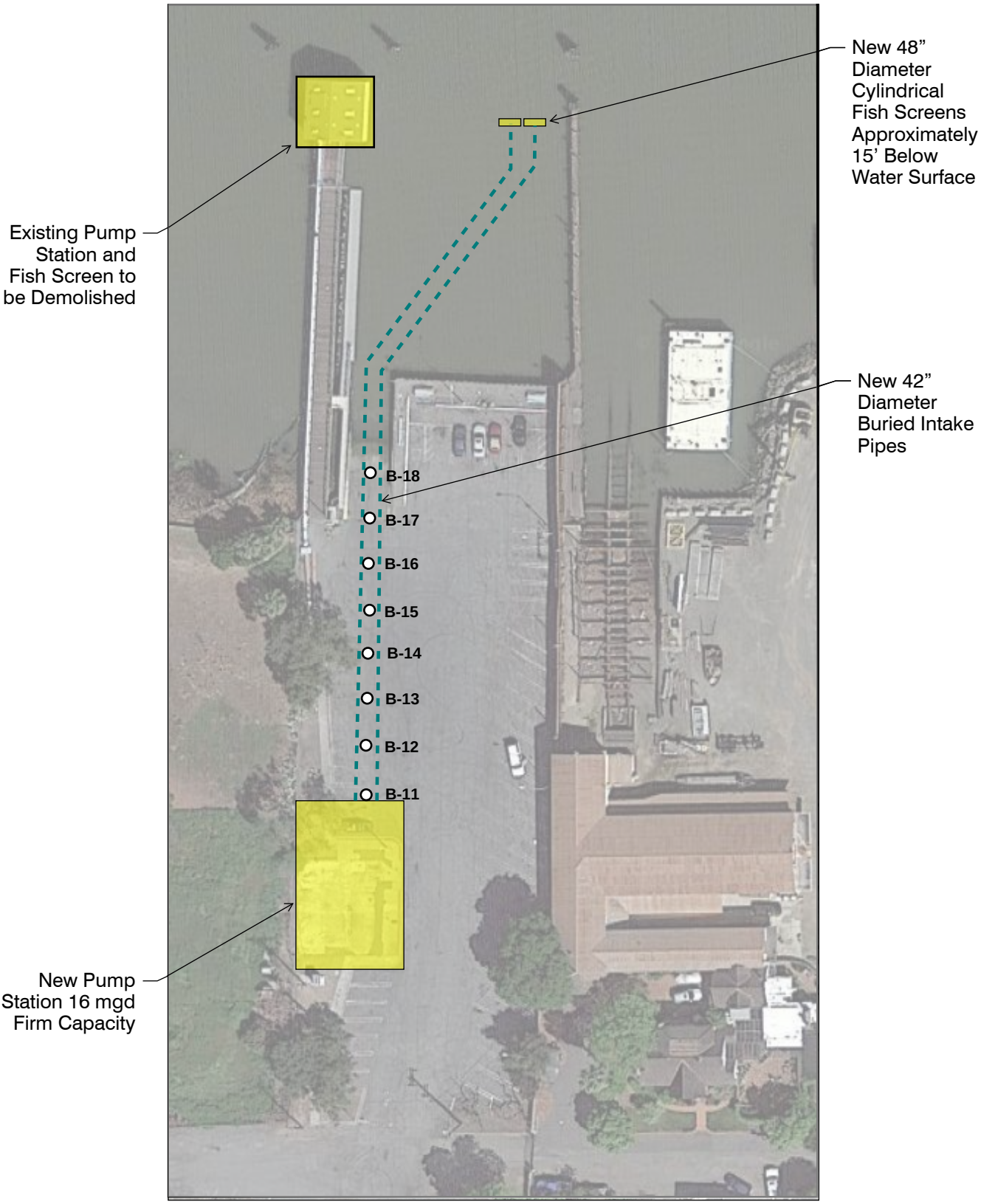

PROPOSED BORING LOCATIONS

FIGURE 5

CITY OF ANTIOCH
BRACKISH WATER DESALINATION PROJECT

carollo

Antioch Boat Launch
Soil Results

Boring ID	B-11	B-11	B-12	B-12	B-13	B-13	B-14	B-14	Tier 1 ESL
Depth (ft)	2	8	2	14	2	11	2	8	
Total PCBs	<2.5	<2.5	<2.5	<2.5	<2.5	<2.5	<2.5	<2.5	0.23
Benzene	<0.0050	<0.0050	<0.0050	<0.0050	<0.0050	<0.0050	<0.0050	<0.0050	0.025
Ethylbenzene	<0.0050	<0.0050	<0.0050	<0.0050	<0.0050	<0.0050	<0.0050	<0.0050	0.43
MtBE	<0.0050	<0.0050	<0.0050	<0.0050	<0.0050	<0.0050	<0.0050	<0.0050	0.028
Toluene	<0.0050	<0.0050	<0.0050	<0.0050	<0.0050	<0.0050	<0.0050	<0.0050	3.2
Total Xylenes	<0.0050	<0.0050	<0.0050	<0.0050	<0.0050	<0.0050	<0.0050	<0.0050	2.1
Total PAHs	ND	ND	ND	ND	ND	ND	ND	0.0543	NA
TPH-g	<1.0	<1.0	<1.0	<1.0	<1.0	<1.0	<1.0	<1.0	100
TPH-d	<1.0	<1.0	<1.0	<1.0	<1.0	<1.0	1.5	<1.0	260
TPH-mo	<5.0	<5.0	<5.0	7.5	6.8	<5.0	26	11	100
Arsenic	5.0	5.0	4.8	6.4	6.3	3.6	7.7	7.6	0.067
Cadmium	<0.5	<0.5	<0.5	<0.5	<0.5	<0.5	<0.5	<0.5	1.9
Chromium	36	34	30	34	32	24	37	53	160
Lead	4.8	4.2	14	4.8	26	5.8	46	9.9	32
Nickel	38	29	23	41	31	22	41	42	86
Zinc	37	37	51	54	58	31	72	51	340
Boring ID	B-15	B-15	B-16	B-16	B-17	B-17	B-18	B-18	
Depth (ft)	2	7	2	7	2	7	2	8	
Total PCBs	<2.5	<2.5	<2.5	<2.5	<2.5	<2.5	<2.5	<2.5	0.23
Benzene	<0.0050	<0.0050	<0.0050	<0.0050	<0.0050	<0.0050	<0.0050	<0.0050	0.025
Ethylbenzene	<0.0050	<0.0050	<0.0050	<0.0050	0.0095	<0.0050	0.031	<0.0050	0.43
MtBE	<0.0050	<0.0050	<0.0050	<0.0050	<0.0050	<0.0050	<0.0050	<0.0050	0.028
Toluene	<0.0050	<0.0050	<0.0050	<0.0050	<0.0050	<0.0050	0.033	<0.0050	3.2
Total Xylenes	<0.0050	<0.0050	0.0062	<0.0050	0.071	<0.0050	0.17	<0.0050	2.1
Total PAHs	ND	ND	ND	ND	2.2	ND	ND	ND	NA
TPH-g	<1.0	12	<1.0	<1.0	1.4	<1.0	6.3	<1.0	100
TPH-d	<1.0	**470**	54	47	86	<1.0	68	1.3	260
TPH-mo	10	**620**	**1500**	240	**1700**	<5.0	**1400**	<5.0	100
Arsenic	5.0	8.3	3.9	9.1	2.8	5.9	3.7	5.7	0.067
Cadmium	<0.5	<0.5	<0.5	<0.5	<0.5	<0.5	<0.5	<0.5	1.9
Chromium	33	51	51	47	32	31	28	53	160
Lead	12	9.4	5.1	17	37	3.6	23	8.1	32
Nickel	25	41	59	40	33	45	32	43	86
Zinc	58	50	62	54	59	38	62	45	340

Notes:

Units are milligrams per kilogram (mg/kg)

Tier 1 ESL = Environmental Screening Levels establshed by San Francisco Bay RWQCB. January 2019

Antioch Boat Launch
Groundwater Results

	Boring ID								
Constituent	**B-11**	**B-12**	**B-13**	**B-14**	**B-15**	**B-16**	**B-17**	**B-18**	**Delta Diablo Sewer Discharge Limits**
Total PCBs	<0.50	<0.50	<0.50	<0.50	<0.50	<0.50	<0.50	<0.50	NA
Total BTEX	<0.50	<0.50	<0.50	<0.50	<0.50	<0.50	<0.50	<0.50	1000
Total PAHs	ND	ND	ND	ND	ND	ND	ND	ND	2000
TPH-g	<50	<50	<50	<50	<50	<50	<50	<50	NA
TPH-d	61	130	260	480	660	280	2600	940	NA
TPH-mo	<250	<250	<250	1300	620	770	2400	1000	NA
Total TPH	61	130	260	1780	1280	1050	5000	1940	10000
Arsenic	1500	640	320	230	160	310	350	270	150
Cadmium	<25	<25	<25	<25	<25	<25	<25	<25	100
Chromium	3500	2800	420	1300	1000	1300	1100	1500	500
Lead	840	430	72	240	180	620	190	270	500
Nickel	5300	4400	520	1700	1500	1900	1100	1800	500
Zinc	6800	5300	700	1800	1400	2200	1400	1900	1000

Notes:

Units are micrograms per liter (ug/L)

ND = not detected about laboratory reporting limits

NA = No discharge limit established for this individual constituent

TABLE 2. GROUNDWATER ANALYTICAL RESULTS
Antioch Marina, Fulton Shipyard Road, Antioch, CA

Sample ID	Location	Sample Date	TPH-g	TPH-d	TPH-mo	Benzene	Toluene	Ethyl-benzene	Total Xylenes	MtBE	Naphthalene
B-1	*46' from property line, 2nd row*	12/4/2019	<50	**6,900**	**30,000**	<0.50	<0.50	<0.50	<0.50	<0.50	<1.0
B-2	*4' from property line, 2nd row*	12/4/2019	**120**	**7,900**	**13,000**	<0.50	<0.50	<0.50	<0.50	<0.50	<1.0
B-3A	*25' from property line, 2nd row*	12/6/2019	**270**	**150,000**	**210,000**	<0.50	<0.50	<0.50	<0.50	<0.50	<1.0
B-4	*3' from property line, 1st row*	12/4/2019	**100**	**29,000**	**38,000**	<0.50	<0.50	<0.50	<0.50	4.4	<1.0
B-5	*10' from property line, 3rd row*	12/5/2019	89	**2,800**	**3,300**	<0.50	<0.50	<0.50	<0.50	<0.50	<1.0
B-6	*32' from property line, 3rd row*	12/10/2019	<50	**27,000**	**33,000**	<0.50	<0.50	<0.50	<0.50	<0.50	<1.0
B-7	*52' from property line, 3rd row*	12/10/2019	<50	**5,200**	**13,000**	<0.50	<0.50	<0.50	<0.50	<0.50	<1.0
B-8	*33' from property line, 1st row*	12/10/2019	<50	**20,000**	**27,000**	<0.50	<0.50	<0.50	<0.50	<0.50	<1.0
B-9	*53' from property line, 1st row*	12/10/2019	<50	**590**	**2,200**	<0.50	<0.50	<0.50	<0.50	<0.50	<1.0
B-10	*3' from property line, 4th row*	12/10/2019	98	**19,000**	**24,000**	<0.50	<0.50	<0.50	<0.50	<0.50	<1.0
P-1	*approx 80' from property line*	12/10/2019	<50	93	<250	<0.50	<0.50	<0.50	<0.50	<0.50	<1.0
ESL for Groundwater (Fresh Water Aquatic Toxicity)			*440*	*640*	*NE*	*46*	*130*	*290*	*NE*	*66,000*	*24*
ESL for Groundwater (Industrial)			*100*	*100*	*NE*	*1.8*	*4,900*	*15*	*1,600*	*2,000*	*2.0*

all units are micrograms per liter (parts per billion)

< - less than laboratory reporting limit

ESL - environmental screening level as established by the San Francisco Bay Regional Water Quality Control Board, Lookup Tables, January 2019.

values above ESLs are in **bold**

MtBE = Methyl tertiary butyl ether

TPH-g - total petroleum hydrocarbons as gasoline

TPH-d - total petroleum hydrocarbons as diesel

TPH-mo - total petroleum hydrocarbons as motor oil

TABLE 1. SOIL ANALYTICAL RESULTS
Antioch Marina, Fulton Shipyard Road, Antioch, CA

Sample ID	Location	Sample Date	Depth (fbg)	TPH-g	TPH-d	TPH-mo	Benzene	Toluene	Ethyl-benzene	Total Xylenes	MtBE	Naph-thalene
B-1 @ 6.5	*46' from property line, 2nd row*	12/4/2019	6.5	<1.0	<1.0	<5.0	<0.0050	<0.0050	<0.0050	<0.0050	<0.0050	<0.0050
B-1 @ 12	*46' from property line, 2nd row*	12/4/2019	12	64	**1,400**	**2,000**	<0.10	<0.10	<0.10	<0.10	<0.10	<0.10
B-2 @ 10	*4' from property line, 2nd row*	12/4/2019	10	**280**	**7,900**	**11,000**	<0.10	<0.10	<0.10	<0.10	<0.10	<0.10
B-2 @ 19	*4' from property line, 2nd row*	12/4/2019	19	**250**	**3,800**	**5,500**	<0.10	<0.10	<0.10	<0.10	<0.10	<0.10
B-3A @ 10	*25' from property line, 2nd row*	12/6/2019	10	**370**	**9,500**	**12,000**	<0.10	<0.10	<0.10	<0.10	<0.10	**0.25**
B-3A @ 15	*25' from property line, 2nd row*	12/6/2019	15	**130**	**3,100**	**3,900**	<0.10	<0.10	<0.10	<0.10	<0.10	**0.13**
B-3A @ 25	*25' from property line, 2nd row*	12/6/2019	25	<1.0	4.5	7.4	<0.0050	<0.0050	<0.0050	<0.0050	<0.0050	<0.0050
B-4 @ 9	*3' from property line, 1st row*	12/4/2019	9	**120**	**4,600**	**6,200**	<0.10	<0.10	<0.10	<0.10	<0.10	<0.10
B-5 @ 5	*10' from property line, 3rd row*	12/5/2019	5	**510**	**11,000**	**15,000**	<0.020	<0.020	<0.020	<0.020	<0.020	<0.020
B-6 @ 14	*32' from property line, 3rd row*	12/10/2019	14	**200**	**3,000**	**3,700**	<0.50	<0.50	<0.50	<0.50	<0.50	<0.50
B-7 @ 14	*52' from property line, 3rd row*	12/10/2019	14	**110**	**1,500**	**2,100**	<0.050	<0.050	<0.050	<0.050	<0.050	<0.050
B-8 @ 12	*33' from property line, 1st row*	12/10/2019	12	55	**1,600**	**2,100**	<0.050	<0.050	<0.050	<0.050	<0.050	<0.050
B-9 @8	*53' from property line, 1st row*	12/10/2019	8	<1.0	**730**	**4,300**	<0.0050	<0.0050	<0.0050	<0.0050	<0.0050	<0.0050
B-10 @ 11	*3' from property line, 4th row*	12/10/2019	11	**260**	**4,500**	**5,500**	<0.050	<0.050	<0.050	<0.050	<0.050	<0.050
Tier 1 ESL for Soil				*100*	*260*	*100*	*0.025*	*3.2*	*0.43*	*2.1*	*0.028*	*0.042*
ESL for Soil (Industrial)				*2,000*	*1,200*	*180,000*	*47*	*5300*	*21000*	*2500*	*210*	*17*

all units are milligrams per kilogram (parts per million)

< - less than laboratory reporting limit

ESL - environmental screening level as established by the San Francisco Bay Regional Water Quality Control Board, Lookup Tables, January 2019.

values above ESLs are in **bold**

MtBE = Methyl tertiary butyl ether

TPH-g - total petroleum hydrocarbons as gasoline

TPH-d - total petroleum hydrocarbons as diesel

TPH-mo - total petroleum hydrocarbons as motor oil

Delta Diablo
ZONE 3 (ANTIOCH)

1. Delta Diablo, hereinafter referred to as the District, shall review each application on a 'case-by-case' basis.

   Section 2.16.072 Temporary Connections Less Than One (1) Year: A temporary connection is defined as a connection to the District's sewerage system for less than one (1) year. Such connections add wear and tear to the system and will be assessed a temporary connection charge for the period of connection to the system based on the peak volume of flows and the zone where the temporary connection is served. Such temporary connections may be less than the minimum charge of one (1) ERU. The basis of computation of the temporary connection **charge for capacity rental** shall be based on that connection's share of interest on debt service used for system expansion as determined by the Manager (Ord. 94 § 2, 2010).

   Section 2.16.072 Temporary Connections Greater Than One (1) Year: Should a connection originally determined to be temporary remain connected to the system for more than one (1) year, that connection will be deemed a permanent connection subject to the **Capital Facilities Capacity Charge** for the zone in which the connection is served. Prior connection charge payments for temporary service will be credited as payment toward the permanent connections Capital Facilities Capacity Charge (Ord. 94 § 2, 2010).

   Section 2.28.020 Prohibited Discharge Standards: General Prohibitions. No User shall introduce or cause to be introduced into the POTW any pollutant or wastewater which causes pass through or interference. These general prohibitions apply to all Users of the POTW whether or not they are subject to categorical Pretreatment Standards or any other national, State, or local Pretreatment Standards or Requirements.

   Section 2.28.025 Prohibited Discharge Location: No User shall discharge any wastewater directly to a manhole or other opening in, or connecting to the District sewage system other than through sewer laterals or other sewer connections approved by the District, unless a permit has been obtained for such discharge. A permit will be issued only for direct discharge in the event the discharge is otherwise in compliance with provisions of this Code and no other alternative is reasonably available in the opinion of the District.

2. Submit the following information with your application:
   - Site background (Include maps)
   - Waste stream pollutant characteristics
   - Flows (gallons per day) expected
   - Samples shall be analyzed for pollutants described in the Local Limits section (The District's Maximum Daily Local Limits for Wastewater Discharge). Total Toxic Organics shall be screened using **EPA Methods 608, 624, and 625**. CAM 17 Metals (The specific metals identified in the CAM 17 Method shall be analyzed using **EPA 200 Series for Metals**).
   - Anion – Cation Balance, Iron, Conductivity Total Dissolved Solids, Total Suspended Solids, Chemical Oxygen Demand, Biochemical Oxygen Demand, (Benzene, Toluene, Ethylbenzene & Xylene – BTEX), and Total Petroleum Hydrocarbons (TPH) are not included in the District's Local Limits but shall be analyzed.
   - All samples shall be analyzed by an ELAP-certified laboratory. The pollutants to be analyzed may be specified by District personnel during the application process and will be handled on a case by case basis.
   - Proposed pretreatment technologies, with schematics of plumbing and processes.
   - Duration of proposed waste stream discharge.
   - Other pertinent information, including other constituents found in the wastewaters that are not included in the Local Limits section.

3. **Payment of permit fee, capital facilities capacity charge and/or capacity rental charge shall be submitted by the responsible party upon approval of discharge permit issuance.**

4. Please direct any questions regarding this SDP application to:

Jason Yun	Andrew Mora
Environmental Compliance Specialist II	Environmental Compliance Specialist I
Delta Diablo	Delta Diablo
2500 Pittsburg-Antioch Highway	2500 Pittsburg-Antioch Highway
Antioch, CA 94509	Antioch, CA 94509
(925)756-1913 or jasony@deltadiablo.org	(925)756-1929 or andrewm@deltadiablo.org

Delta Diablo
SPECIAL DISCHARGE PERMIT (SDP) APPLICATION ANTIOCH

This permit is issued by the District. The District is the wastewater resource recovery facility that gives special approval to the responsible party indicated below to discharge the below listed waste(s) to the District's facilities on a one-time basis, or for a specified period of time. The Permittee must reapply for a new Special Discharge Permit (SDP) for any subsequent discharges, unless otherwise stated.

To be completed by Permittee. The District will review the ***completed application for final decision.***

DISCHARGE SOURCE	**PERMIT # SDP-**
Name of Clean-up Site:	
Site Address:	
Site Location; City / Zip Code:	
RESPONSIBLE PARTY / BILLING ADDRESS	
Name:	
Address:	
City / State / Zip Code:	
Phone:	
PROPOSED DISCHARGE	
Type of Waste:	
Total Quantity to be Discharged:	**GALS**
Peak (Maximum) Discharge Flow Rate: (See page 4 for estimation charge)	**GPM**
Identify Discharge Location:	
Effective Start Date for Discharge:	
Expiration End Date for Discharge:	

To be completed by Delta Diablo and acknowledged by the responsible party.

Discharge Permit Fee: **$263 or $450 depending on total discharge flow amount**	$
Capital Facilities Capacity Charge (> 1 year) or Capacity Rental Charge (< 1 year): **$389.47/ERU** (See Page 4)	$
Total Amount Due Now:	$
Sewer Service Charge / Discharge amount: (See Page 5) (HCF = Hundred Cubic Feet) **Antioch:**	$ **(determined at the end of project)**
Date Laboratory Analysis Received:	
Laboratory Analysis Accepted:	Yes ☐ No ☐
Maximum Flow Rate into Sanitary Sewer:	**GPM**
Flow Meter Required:	Yes ☐ No ☐
Pretreatment or Other Requirements:	See special conditions section
Authorized Discharge Period: **Not to exceed one year unless otherwise noted.**	

"I certify under penalty of perjury that this document and all attachments were prepared under my direction or supervision and in accordance with the system designed to ensure that qualified personnel properly gather and evaluate the information submitted. Based on my inquiry of the person(s) who manages the system or those directly responsible for gathering the information, the information submitted is, to the best of my knowledge and belief, true, accurate, and complete. I am aware that there are significant penalties for knowingly submitting false information, including the possibility of fine and/or imprisonment for knowing violations."

Further, I understand that failure to accurately describe the above information or failure to comply with the permit and/or any applicable District regulation may result in the immediate suspension of this Special Discharge Permit and/or other penalties as may be allowed by law.

Acknowledged by Responsible Party:	**Date:**

Approved by Darrell Cain, Laboratory Manager	**Date:**

Delta Diablo
ZONE 3 (ANTIOCH)

SPECIAL CONDITIONS

Check all that apply

1. ☐ A **monthly Self-Monitoring Report** shall be submitted to the District for all projects lasting longer than two (2) months. For all projects that are shorter than two (2) months of operation, an end of project report is required at the completion of the project. The monthly Self-Monitoring Report shall include at a minimum: Special Discharge Permit (SDP) number, name of project, location of project, name of Consulting/Contracting Firm, contact person's name and phone number, billing address, amount of flow discharged per month, and the maximum flow rate of discharged amount. **Reports are due by the 15th day of the following month.**

2. ☐ **End of Project Self-Monitoring Report** shall include at a minimum: Special Discharge Permit (SDP) number, name of project, location of project, name of Consulting/Contracting Firm, contact person's name and phone number, billing address, amount of flow discharged per month, and the maximum flow rate of discharged amount. **Reports are due by the 15th day of the following month.**

3. ☐ Discharge flow rate shall not exceed the amount listed on the previous page of this permit.

4. ☐ The flow meter shall be totalized (gallons). The flow meter must be non-resettable and certified for accuracy.

5. ☐ If additional time is needed for projects lasting longer than ten (10) months, please contact the District and resubmit a Special Discharge Permit application 60 days prior to the permit expiration date.

6. ☐ Waste loads that are trucked to the District for disposal are only allowed to discharge during normal business hours between 8:00 am – 5:00 pm Monday thru Friday. **TRUCKED WASTES WILL BE BILLED BASED ON CAPACITY LOAD LISTED ON VEHICLE.** Driver must notify the Plant Operator at (925) 382-6960 prior to bringing the load to the District. The following conditions apply:

   - Truck driver shall observe all safety rules and proceed with caution on the plant site.
   - pH shall be maintained between 6-10 s.u. at the time of delivery.
   - Trucks shall not leak any oils or other fluids while on plant site.
   - The driver shall have a copy of the special discharge permit and a truck waste manifest.
   - The District retains the right to reduce and/or terminate future discharges.

If an authorized trucked waste permit holder has their load rejected by operations staff twice in the same day, the permit holder will not be allowed to bring any more loads to the District until the next business day. If a violation of the terms of the condition of the Special Discharge Permit continues, the District may consider additional actions up to and including the termination of the discharge permit.

7. ☐ List the name of the Contractor or consulting firm responsible for this project.

Consulting Firm Name:	
Address:	
City:	
Contact Person:	
Phone:	

Delta Diablo
ZONE 3 (ANTIOCH)

CAPACITY RENTAL CHARGE / CAPITAL FACILITIES CAPACITY CHARGE ESTIMATION

Peak Discharge Rate	3 gallons per minute
Peak Daily Volume	4320 gallons per day
Total Volume	1576800 gallons per year
4320 gpd / 200 gpd =	21.6 ERU's
21.6 ERU's x $389.47 / ERU=	8412.552 dollars per year
$8412.552 / 12=	701.046 dollars per month

Peak Discharge Rate	6 gallons per minute
Peak Daily Volume	8640 gallons per day
Total Volume	3153600 gallons per year
8640 gpd / 200 gpd =	43.2 ERU's
43.2 ERU's x $389.47 / ERU=	16825.104 dollars per year
$16825.104 / 12=	1402.092 dollars per month

Peak Discharge Rate	10 gallons per minute
Peak Daily Volume	14400 gallons per day
Total Volume	5256000 gallons per year
14400 gpd / 200 gpd =	72 ERU's
72 ERU's x $389.47 / ERU=	28041.84 dollars per year
$28041.84 / 12=	2336.82 dollars per month

Peak Discharge Rate	20 gallons per minute
Peak Daily Volume	28800 gallons per day
Total Volume	10512000 gallons per year
28800 gpd / 200 gpd =	144 ERU's
144 ERU's x $389.47 / ERU=	56083.68 dollars per year
$56083.68 / 12=	4673.64 dollars per month

Peak Discharge Rate	50 gallons per minute
Peak Daily Volume	72000 gallons per day
Total Volume	26280000 gallons per year
72000 gpd / 200 gpd =	360 ERU's
360 ERU's x $389.47 / ERU=	140209.2 dollars per year
$140209.2 / 12=	11684.1 dollars per month

Gpd = gallons per day
ERUs = Equivalent Residential Units

Delta Diablo
ZONE 3 (ANTIOCH)

SEWER SERVICE CHARGE CALCULATION

The Special Discharge fees for users discharging more than 10,000 gallons:

Permit Fee: $450 / plus cost of lab fees & Sewer Service Charge

Formula for Sewer Service Charge:

$UC = Q_D/748$ gals/HCF x $[BOD_D/BOD_I + TSS_D/ TSS_I - 1]$ x **$4.69 / HCF*** (Antioch)

Where:	UC	=	User Charge
	Q_D	=	User Volume in Gallons
	HCF	=	Hundred Cubic Feet
	BOD_D	=	User Concentration, mg/l (ppm)
	BOD_I	=	Domestic = 220 mg/l (ppm) Average Domestic Concentration
	TSS_D	=	User Concentration (ppm)
	TSS_I	=	Domestic = 220 mg/l (ppm) Average Domestic Concentration

---

The Special Discharge fees for users discharging less than 10,000 gallons:

Permit Fee: $ 263.00 / plus cost of lab fees & Sewer Service Charge

Formula for Sewer Service Charge:

$UC = Q_D/748$ x $[BOD_D/BOD_I + TSS_D/ TSS_I - 1]$ x **$4.69 / HCF*** (Antioch)

Where:	UC	=	User Charge
	Q_D	=	User Volume in Gallons
	BOD_D	=	User Concentration, mg/l (ppm)
	BOD_I	=	Domestic = 220 mg/l (ppm), Average Domestic Concentration
	TSS_D	=	User Concentration (ppm)
	TSS_I	=	220 mg/l (ppm), Average Domestic Concentration

*** Current fiscal year Hundred Cubic Feet (HCF) fee covers July 1, 2019 to June 30, 2020.**
HCF fees are subject to change based on annual fiscal year review.
If the project discharge extends beyond the current fiscal year, July 1, 2019 to June 30, 2020; then the remaining discharge period will be subject to the new fiscal year HCF fee.

Delta Diablo
MAXIMUM DAILY LOCAL LIMITS FOR WASTEWATER DISCHARGE

PARAMETER	LIMIT
Arsenic	0.15 mg/L
Cadmium	0.1 mg/L
Chromium	0.5 mg/L
Copper	0.50 mg/L
Cyanides	0.2 mg/L
Lead	0.5 mg/L
Mercury	0.003 mg/L
Nickel	0.5 mg/L
Phenols*	1.0 mg/L
Selenium	0.25 mg/L
Silver	0.2 mg/L
Zinc	1.0 mg/L
Ammonia as N	200 mg/L
Oil & Grease Animal/Vegetable	300 mg/L
Oil & Grease Petroleum/Mineral	100 mg/L
pH	6-10 s.u.
Total Toxic Organics (TTO)**	2.0 mg/L

* Total Recoverable Phenolics, by EPA Method 420.4.
** The summation of compounds as defined in Appendix A (next page) using EPA Methods 608, 624, and 625.
Metals are to be performed using EPA Method 200 Series.

The District also requires the following additional analysis to be performed:

PARAMETER	CONCENTRATION	CEILING LIMIT
Anion / Cation Balance	Total Anions (Alkalinity, Cl, F, NO_3-N, SO_4) Total Cations (Ca, K, Mg, Na, Mn, Cu, Zn)	----------
Iron	mg/L	---------
Conductivity	µmhos/cm	----------
Total Dissolved Solids	mg/L	---------
Total Suspended Solids	mg/L	--------
Biochemical Oxygen Demand	mg/L	--------
Chemical Oxygen Demand	mg/L	--------
Antimony	mg/L	--------
Barium	mg/L	--------
Beryllium	mg/L	---------
Cobalt	mg/L	----------
Molybdenum	mg/L	----------
Thallium	mg/L	----------
Vanadium	mg/L	---------
Benzene, Toluene, Ethylbenzene & Xylene (BTEX)	mg/L	1.0
Total Petroleum Hydrocarbons (TPH)	mg/L	10.0

APPENDIX A

The District's Local Discharge Limits include a parameter called Total Toxic Organics (TTO). The required analytical methods for TTO analysis are listed in 40 CFR Part 136 and include the following EPA Methods: 624,625, 608, and 1613, respectively. Unless specifically required, EPA Method 1613 for dioxins is not mandatory for routine TTO analysis. The constituents with concentrations greater than the minimum limit/reporting limit must be added together to determine compliance with the District's Local Discharge Limit for TTO of 2.0 mg/L. The following is a list of the constituents of TTO:

EPA Method 624 Compounds

Acrolein
Acrylonitrile
Benzene
Bromodichloromethane (Dichlorobromomethane)
Bromform
Brommomethane (Methyl Bromide)
Carbon tetrachloride (Tetrachloromethane)
Chlorobenzene
Chloroethane (Ethyl Chloride)
2-Chloroethyl vinyl ether
Chloroform (trichloromethane)
Chloromethane (Methyl Chloride)
Dibromochloromethane (Chlorodibromomethane)
1, 2-Dichlorobenzene
1, 3-Dichlorobenzene
1, 4-Dichlorobenzene
1, 1-Dichloroethane
1, 2-Dichloroethane
1, 1-Dichloroethene (1, 1-dichloroethylene)
trans-1, 2-Dichloroethene
1, 2-Dichloropropane
cis-1, 3-Dichloropropene
trans-1, 3-Dichloropropene
Ethylbenzene
Methylene Chloride (Dichloromethane)
1, 1, 2, 2,-Tetrachloroethane
Tetrachloroethene (PCE)
Toluene
1, 1, 1-Trichloreothane
1, 1, 2-Trichloroethane
Trichloroethene (TCE)
Trichlorofluoromethane
Vinyl chloride (Chloroethylene)

EPA Method 625 Compounds

Acenaphthene
Acenaphthylene
Anthracene
Benzidine
Benzo (a) anthracene
Benzo (a) pyrene
Benzo (b) fluoranthene
Benzo (g, h, i) perylene
Benzo (k) fluoranthene
Benzyl butyl phthalate
bis (2-Chloroethoxy) methane
bis (2-Chloroethyl) ether
bis (2-Chloroisopropyl) ether
bis (2-Ethylhexyl) phthalate
4-Bromophenyl phenyl ether
4-Chloro-3-methylphenol
2-Chloronaphthalene
2-Chlorophenyl
4-Chlorophenyl phenyl ether
Chrysene
Dibenzo (a, h) anthracene
1, 2-Dichlorobenzene
1, 3-Dichlorobenzene
1, 4-Dichlorobenzene
3, 3'-Dichlorobenzidine
2, 4-Dichlorophenol
Diethyl phthalate
2,4-Dimethylphenol
Dimethylphthalate
Di-n-butylphthalate
2, 4-Dinitirophenol
2, 4-Dinitrotoluene
2, 6-Dinitrotoluene
Di-n-octylphthalate
1.2-Diphenylhydrazine/Azo
Fluoranthene
Fluorene
Hexachlorobenzene
Hexchlorobutadiene
Hexachlorocyclopentadiene
Hexachloroethane
Indeno (1, 2, 3-cd) pyrene
Isophorone
2-Methyl-4, 6-dinitrophenol
Naphthalene
Nitrobenzene
2-Nitrophenol
4-Nitrophenol
N-Nitrosodimethylamine
N-Nitroso-di-n-propylamine
N-Nitrosodiphenylamine
Pentachlorophenol
Phenanthrene
Phenol
Pyrene
1, 2, 4-Trichlorobenzene
2, 4, 6-Trichlorophenol

EPA Method 608 Compounds

Aldrin
alpha-BHC
beta-BHC
delta-BHC
gamma-BHC (Lindane)
Chlordane
4, 4'-DDD
4, 4'-DDE
4,4'DDT
Dieldrin
Endosulfan I
Endosulfan II
Endosulfan sulfate
Endrin
Endrin aldehyde
Heptachlor
Heptachlor epoxide
PCB 1016
PCB 1221
PCB 1232
PCB 1242
PCB 1248
PCB 1254
PCB 1260
Toxaphene

MAJOR EQUIPMENT OR SYSTEM SCHEDULE
SUPPLIED BY CONSTRUCTION CONTRACTOR

SECTION	EQUIPMENT OR SYSTEM	NAME OF EQUIPMENT OR SYSTEM SELECTED Indicate with a check mark within the ( )
11256	Polymer Blending and Feed Equipment	A. ( ) UGSI Chemical Feed, Inc. _____ "or equal" write-in
11312D	Vertical Turbine Pumps – RO Feed and Booster Pumps	A. ( ) Afton B. ( ) Flowserve C. ( ) Floway _____ "or equal" write-in
	Vertical Turbine Pumps – Raw Water and Brackish Filtered Water Pumps	A. ( ) Flowserve B. ( ) Sulzer / Johnston Pumps C. ( ) National Pump C. D. ( ) Floway _____ "or equal" write-in
13206B	Hydropneumatic Pressure Control System Including Tank	A. ( ) Pulsco _____ "or equal" write-in
16232	Backup Generator Sets	A. ( ) Cummins B. ( ) Caterpillar C. ( ) Kohler D. ( ) MTU Onsite Energy _____ "or equal" write-in
16267	Medium Voltage Variable Frequency Drives	A. ( ) Eaton B. ( ) Schneider C. ( ) Allen-Bradley D. ( ) Siemens _____ "or equal" write-in
16264	Variable Frequency Drives	A. ( ) Eaton B. ( ) Schneider C. ( ) Allen-Bradley D. ( ) ABB _____ "or equal" write-in
11288	Fabricated Stainless Steel Slide Gates	A. ( ) Golden Harvest B. ( ) Rodney Hunt-Fontaine C. ( ) Whipps, Inc. D. ( ) Waterman

SECTION	EQUIPMENT OR SYSTEM	NAME OF EQUIPMENT OR SYSTEM SELECTED Indicate with a check mark within the ( )
		_____ “or equal” write-in
16341 16342	Medium Voltage Switchgear Equipment	A. ( ) Eaton B. ( ) Schneider C. ( ) ABB D. ( ) Powell _____ “or equal” write-in
16343	21kV Medium Voltage Switchgear Equipment	A. ( ) Eaton B. ( ) Schneider _____ “or equal” write-in
16273	Liquid filled Substation Transformers	A. ( ) Eaton B. ( ) ABB C. ( ) Schneider Electric _____ “or equal” write-in
16272	Dry-Type Transformer	A. ( ) Eaton B. ( ) Schneider Electric C. ( ) ABB _____ “or equal” write-in
16271	Medium Voltage Dry-Type Transformer	A. ( ) Eaton B. ( ) Schneider Electric C. ( ) ABB D. ( ) Cooper Power Systems _____ “or equal” write-in
11901	Cartridge Filters	A. ( ) Fil-Trek B. ( ) Parker Hannifin Corp. _____ “or equal” write-in
11800	Reverse Osmosis Systems	A. ( ) Biwater B. ( ) Harn R/O Systems C. ( ) H□O Innovations No Equal
13206A	FRP Storage Tanks	A. ( ) Ershigs, Inc. B. ( ) Belco Manufacturing Co., Inc. _____

SECTION	EQUIPMENT OR SYSTEM	NAME OF EQUIPMENT OR SYSTEM SELECTED **Indicate with a check mark within the ( )**
		"or equal" write-in
13206Q	Sulfuric Acid Storage Tank	A. ( ) Steel Structures, Inc. B. ( ) Palmer Manufacturing and Tank, Inc. (Garden City, KS). C. ( ) Modern Welding, Co. _____ "or equal" write-in
11242	Chemical Metering Pumps	A. ( ) Blue-White Industries B. ( ) Pulsafeeder, Inc. C. ( ) Milton Roy. _____ "or equal" write-in
13224	Filter Underdrains	A. ( ) Leopold _____ "or equal" write-in
11902	Fish Screen Assembly and Cleaning System	A. ( ) Elgin Separation Solutions. B. ( ) Hendrick Screen Company. C. ( ) Aqseptence Group GmbH. _____ "or equal" write-in
17720	PLCs	A. ( ) Modicon Match existing equipment - no substitution allowed
16444	Motor Control Centers	D. ( ) Eaton B. ( ) Schneider Electric C. ( ) Allen-Bradley _____ "or equal" write-in
11505	GAC Contactor	A. ( ) Calgon Carbon B. ( ) Tetrasolv Filtration C. ( ) AqueoUSVETS D. ( ) TIGG, a Newterra Company _____ "or equal" write-in
17542	Silt Density Index Analyzers	A. ( ) Mabat Systems _____ "or equal" write-in
Drawings	Static Mixers	A. ( ) Westfall Manufacturing Co. _____ "or equal" write-in

SECTION	EQUIPMENT OR SYSTEM	NAME OF EQUIPMENT OR SYSTEM SELECTED **Indicate with a check mark within the ( )**
17733	SCADA Software	Wonderware Match Existing Equipment - no substitution allowed
17304	Coriolis Flow Meters	Micro Motion, Inc. Match Existing Equipment – no substitutions allowed

**END OF MAJOR EQUIPMENT OR SYSTEM SCHEDULE **

3.02 PUMP SCHEDULE

Tag Numbers	Clearwell Sample Pumps (PMP 25.0020 and PMP 25.002A)[AD3]	Delta Diablo WWTP Outfall Effluent Sample Pump No. 1 and 2 (PMP 25.0906A and PMP 25.0906B)
Service	Potable Water	Secondary Effluent
Quantity	1	2
Maximum Noise, dBA at 3 Feet	85	85
Torsional Analysis	Not Required	Not Required
Minimum Pumped Fluid Degrees Fahrenheit	50	50
Normal Pumped Fluid Degrees Fahrenheit	70	70
Maximum Pumped Fluid Degrees Fahrenheit	85	85
Flow, gpm	20	30
Head, Feet	50~~21~~ [AD3]	85
Head Range, Feet	22~~16~~ to 53~~23~~ [AD3]	48 to 90
Flow Range, gpm	15~~2~~ to 95~~45~~ [AD3]	20 to 110
Maximum Shut Off Head, Feet	60~~26~~ [AD3]	98
Minimum NPSHa at Every Specified Flow, Feet	24	14
Maximum Suction Static Lift, Feet	10	20
Motor Specification Section	16222 - Low Voltage Motors up to 500 Horsepower	16222 - Low Voltage Motors up to 500 Horsepower
Motor Horsepower	1.5~~0.5~~ [AD3]	3
Service Factor	1.15	1.15
Voltage/Phases/Hertz	460/3/60~~120~~ [AD3]	460/3/60
NEMA Enclosure Type	TEFC	TEFC
Test Witnessing	Not Witnessed	Not Witnessed
Performance Test Level	1	1
Vibration Test Level	None	None

Tag Numbers	Clearwell Sample Pumps (PMP 25.0020 and PMP 25.002A)[AD3]	Delta Diablo WWTP Outfall Effluent Sample Pump No. 1 and 2 (PMP 25.0906A and PMP 25.0906B)
Noise Test Level	None	None

Tag Numbers	Raw Water Sample Pump (PMP 21.0602)	Combined Filtered Effluent Sample Pump (PMP 24.0002)
Service	Raw Water	Filtered Effluent
Quantity	1	1
Maximum Noise, dBA at 3 Feet	85	85
Torsional Analysis	Not Required	Not Required
Minimum Pumped Fluid Degrees Fahrenheit	50	50
Normal Pumped Fluid Degrees Fahrenheit	70	70
Maximum Pumped Fluid Degrees Fahrenheit	85	85
Flow, gpm	10	10
Head, Feet	20	20
Head Range, Feet	10 to 22	10 to 22
Flow Range, gpm	5 to 45	5 to 45
Maximum Shut Off Head, Feet	22	22
Minimum NPSHa at Every Specified Flow, Feet	14	14
Maximum Suction Static Lift, Feet	15	15
Motor Specification Section	16222 - Low Voltage Motors up to 500 Horsepower	16222 - Low Voltage Motors up to 500 Horsepower
Motor Horsepower	0.25	0.25
Service Factor	1.15	1.15
Voltage/Phases/Hertz	120	120

Tag Numbers	Raw Water Sample Pump (PMP 21.0602)	Combined Filtered Effluent Sample Pump (PMP 24.0002)
NEMA Enclosure Type	TEFC	TEFC
Test Witnessing	Not Witnessed	Not Witnessed
Performance Test Level	1	1
Vibration Test Level	None	None
Noise Test Level	None	None

END OF SECTION

[AD3] Addendum No. 3

Field Instruments

Specification:

Tag	Type	Furnished By	Range	Description	Drawing #
WI-25.0011					25N53

Specification: 15430

Tag	Type	Furnished By	Range	Description	Drawing #
FSH-25.0017			___GPM	FLOW SWITCH HIGH	25N53
FSH-66.0803			1 GPM	H2SO4 EMERGENCY SHOWER & EYEWASH FLOW S	25N60
FSH-66.0902			1 GPM	CaCl2 EMERGENCY SHOWER & EYEWASH FLOW SWI	25N60
FSH-66.0904			1 GPM	CaCl2 EMERGENCY SHOWER & EYEWASH FLOW SWI	25N60
FSH-65.0201A			1 GPM	NaHSO3 SHOWER & EYEWASH FLOW SWITCH	25N50

Specification: 17201

Tag	Type	Furnished By	Range	Description	Drawing #
LSH-21.0307			___ FT	LEVEL SWITCH HIGH	21N10
LSH-21.0606			___FT	LEVEL SWITCH HIGH	21N10
LSH-21.0608			___ FT	LEVEL SWITCH HIGH	21N10
LSH-25.0908			___ FT	LEVEL SWITCH HIGH	25N59
LSH-25.0909			___ FT	LEVEL SWITCH HIGH	25N59
LSH-21.0605			___FT	LEVEL SWITCH HIGH	21N10
LSH-25.0907			___ FT	LEVEL SWITCH HIGH	25N59
LSH-66.0801A			1 FT	H2SO4 STORAGE CONTAINMENT HIGH LEVEL SWITC	25N60
LSH-66.0903			1 FT	CACL2 STORAGE CONTAINMENT DIKE HIGH LEVEL S	25N60
LSH-25.0019	FLOAT			SUMP LEVEL	25N53
LSLL-25.0019	FLOAT			SUMP LEVEL	25N53

Specification: 17206

Tag	Type	Furnished By	Range	Description	Drawing #
LIT-66.0901	LEVEL		0-17 FT	CACL2 TANK NO. 1 LEVEL INDICATING TRANSMITTER	25N60

Field Instruments

Specification: 17206

Tag	Type	Furnished By	Range	Description	Drawing #
LIT-21.0302	ULTRASONIC		0-15 FT	ULTRASONIC LEVEL TRANSMITTER	21N10
LIT-21.0305	ULTRASONIC		0-15 FT	ULTRASONIC LEVEL TRANSMITTER	21N10
LIT-25.0001	ULTRASONIC		0-20 FT	ULTRASONIC LEVEL TRANSMITTER	25N50
LIT-66.0801B	ULTRASONIC		0-16 FT	H2SO4 TANK NO. 1 LEVEL INDICATING TRANSMITTER	25N60
LIT-66.0806A	ULTRASONIC		0-8 FT	LEVEL INDICATING TRANSMITTER	25N60

Specification: 17301

Tag	Type	Furnished By	Range	Description	Drawing #
FSL-21.0301	THERMAL		1380 GPM	THERMAL FLOW SWITCH	21N10
FSL-21.0302	THERMAL		1380 GPM	THERMAL FLOW SWITCH	21N10
FSL-21.0303	THERMAL		1380 GPM	THERMAL FLOW SWITCH	21N10
FSL-25.0001	THERMAL		1380 GPM	THERMAL FLOW SWITCH	25N50
FSL-25.0002	THERMAL		1380 GPM	THERMAL FLOW SWITCH	25N50
FSL-25.0003	THERMAL		1380 GPM	THERMAL FLOW SWITCH	25N50
FSL-25.0011	THERMAL		100 GPM	THERMAL FLOW SWITCH	25N53
FSL-25.0101	THERMAL		100 GPM	THERMAL FLOW SWITCH	25N51
FSL-25.0104	THERMAL		100 GPM	THERMAL FLOW SWITCH	25N51
FSL-25.0201	THERMAL		100 GPM	THERMAL FLOW SWITCH	25N51
FSL-25.0204	THERMAL		100 GPM	THERMAL FLOW SWITCH	25N51
FSL-25.0301	THERMAL		100 GPM	THERMAL FLOW SWITCH	25N52
FSL-25.0304	THERMAL		100 GPM	THERMAL FLOW SWITCH	25N52
FSL-25.0401	THERMAL		100 GPM	THERMAL FLOW SWITCH	25N52
FSL-25.0404	THERMAL		100 GPM	THERMAL FLOW SWITCH	25N52
FSL-25.0906A	THERMAL		0-20 GPM	THERMAL FLOW SWITCH	25N59
FSL-25.0906B	THERMAL		0-20 GPM	THERMAL FLOW SWITCH	25N59

Field Instruments

Specification: 17302

Tag	Type	Furnished By	Range	Description	Drawing #
FI-26.0301A	MAGNETIC		0-1500 GPM	FLOW METER	25N60
FI-26.0301B	MAGNETIC		0-10000 GPM	FLOW METER	25N60
FIT-21.0601	MAGNETIC		208-1111 GPM	FLOW METER	21N10
FIT-21.0602	MAGNETIC		208-1389 GPM	FLOW METER	21N10
FIT-21.0603	MAGNETIC		1390-11815 GPM	FLOW METER	21N10
FIT-24.0102	MAGNETIC		0-2000 GPM	FLOW METER	25N40
FIT-24.0202	MAGNETIC		0-2000 GPM	FLOW METER	25N40
FIT-24.0302	MAGNETIC		0-2000 GPM	FLOW METER	25N40
FIT-24.0402	MAGNETIC		0-2000 GPM	FLOW METER	25N40
FIT-24.0502	MAGNETIC		0-2000 GPM	FLOW METER	25N40
FIT-24.0602	MAGNETIC		0-2000 GPM	FLOW METER	25N40
FIT-24.0702	MAGNETIC		0-2000 GPM	FLOW METER	25N40
FIT-24.0802	MAGNETIC		0-2000 GPM	FLOW METER	25N40
FIT-25.0001A	MAGNETIC		0-3500 GPM	FLOW METER	25N50
FIT-25.0001B	MAGNETIC		0-1500 GPM	FLOW METER	25N59
FIT-25.0002A	MAGNETIC		0-3500 GPM	FLOW METER	25N50
FIT-25.0003A	MAGNETIC		0-3500 GPM	FLOW METER	25N50
FIT-25.0018	MAGNETIC		0-2000 GPM	FLOW METER	25N53
FIT-25.0903	MAGNETIC		0-1000 GPM	FLOW METER	25N53
FIT-25.0905	MAGNETIC		0-3500 GPM	FLOW METER	25N59
FIT-26.0301A	MAGNETIC		0-1500 GPM	FLOW METER	25N60
FIT-26.0301B	MAGNETIC		0-10000 GPM	FLOW METER	25N60
FT-21.0304	MAGNETIC		0-12000 GPM	FLOW METER	21N10

Specification: 17304

Tag	Type	Furnished By	Range	Description	Drawing #

Field Instruments

Specification: 17304

Tag	Type	Furnished By	Range	Description	Drawing #
FT-65.0201	CORIOLIS		0.006 - 1.157 GPH	NAHSO3 METERING PUMPS DISCHARGE FLOW TRAN	25N50
FT-66.0801	CORIOLIS		0.05-5.21 GPH	H2SO4 METERING PUMPS DISCHARGE FLOW TRANS	25N60
FT-66.0802	CORIOLIS		0.05-5.21 GPH	H2SO4 METERING PUMPS DISCHARGE FLOW TRANS	25N60
FT-66.0804	CORIOLIS		0.05-5.21 GPH	H2SO4 METERING PUMPS DISCHARGE FLOW TRANS	25N60
FT-66.0901	CORIOLIS		3.3-24.2 GPH	CACL2 METERING PUMPS DISCHARGE FLOW TRANS	25N60
FT-69.0101	CORIOLIS		0.08-1.2 GPH	ANTISCALANT FLOW TRANSMITTER	25N90

Specification: 17308

Tag	Type	Furnished By	Range	Description	Drawing #
FIT-71.5001	PROPELLER		0-300 GPM	FLOW TOTALIZER	25N53

Specification: 17316

Tag	Type	Furnished By	Range	Description	Drawing #
FI-25.0005A			0-10 GPM	ROTAMETER	25N50
FI-25.0005E			0-0.5 GPM	ROTAMETER	25N50
FI-26.0401F			__-__ GPM	ROTAMETER	25N60
FI-23.0301A			0-5 GPM	ROTAMETER	25N60
FI-24.0002			0-5 GPM	ROTAMETER	25N40
FI-25.0005H			0-10 GPM	ROTAMETER	25N50
FI-25.0005K			0-0.5 GPM	ROTAMETER	25N50
FI-25.0904A			0-5 GPM	ROTAMETER	25N59
FI-25.0904B			0-5 GPM	ROTAMETER	25N59
FI-25.0904C			0-0.5 GPM	ROTAMETER	25N59
FI-25.0904D			0-5 GPM	ROTAMETER	25N59
FI-26.0401A				ROTAMETER	25N60
FI-26.0401B				ROTAMETER	25N60

Field Instruments

Specification: 17316

Tag	Type	Furnished By	Range	Description	Drawing #
FI-26.0401C				ROTAMETER	25N60

Specification: 17403

Tag	Type	Furnished By	Range	Description	Drawing #
PSH-25.0903	PRESS SW		65 PSIG OPEN	PRESSURE SWITCH HIGH	25N53
PSH-66.0805	PRESS SW		30 PSIG OPEN	PRESSURE SWITCH HIGH	25N60
PSL-25.0015	PRESS SW		10 PSIG OPEN	PRESSURE SWITCH LOW	25N53
PSL-25.0104	PRESS SW		10 PSIG OPEN	PRESSURE SWITCH LOW	25N51
PSL-25.0204	PRESS SW		10 PSIG OPEN	PRESSURE SWITCH LOW	25N51
PSL-25.0304	PRESS SW		10 PSIG OPEN	PRESSURE SWITCH LOW	25N52
PSL-25.0404	PRESS SW		10 PSIG OPEN	PRESSURE SWITCH LOW	25N52
PSH-76.0203C	PRESSURE		___ PSIG OPEN	PRESSURE SWITCH HIGH	21N60
PSL-76.0203B	PRESSURE		___ PSIG OPEN	PRESSURE SWITCH LOW	21N60
PSLL-76.0203A	PRESSURE		___ PSIG OPEN	PRESSURE SWITCH LOW LOW	21N60

Specification: 17404

Tag	Type	Furnished By	Range	Description	Drawing #
PI-21.0301			0-300 PSIG	PRESSURE INDICATOR	21N10
PI-21.0302			0-300 PSIG	PRESSURE INDICATOR	21N10
PI-21.0303			0-300 PSIG	PRESSURE INDICATOR	21N10
PI-25.0005			0-160 PSIG	PRESSURE INDICATOR	25N50
PI-25.0015			0-30 PSIG	PRESSURE INDICATOR	25N53
PI-25.0016			0-100 PSIG	PRESSURE INDICATOR	25N53
PI-25.0903			0-100 PSIG	PRESSURE INDICATOR	25N53
PI-66.0801			0-100 PSIG	H2SO4 METERING PUMPS DISCHARGE PRESSURE G	25N60
PI-66.0802			0-100 PSIG	H2SO4 METERING PUMPS DISCHARGE PRESSURE G	25N60

Field Instruments

Specification: 17404

Tag	Type	Furnished By	Range	Description	Drawing #
PI-66.0803			0-___ PSIG	H2SO4 METERING PUMPS DISCHARGE PRESSURE G	25N60
PI-66.0805			0-60 PSIG	PRESSURE INDICATOR	25N60
PI-66.0901			0-100 PSIG	CACL2 METERING PUMPS DISCHARGE PRESSURE G	25N60
PI-69.0101			0-100 PSIG	DISCHARGE PRESSURE INDICATOR	25N90
PI-71.5001			0-100 PSIG	PRESSURE INDICATOR	25N53
PI-71.5005			0-60 PSIG	PRESSURE INDICATOR	25N53
PI-71.5006			0-60 PSIG	PRESSURE INDICATOR	25N53
PI-21.0602			0-___ PSIG	PRESSURE INDICATOR	21N10
PI-21.0701			0-300 PSIG	PRESSURE INDICATOR	21N10
PI-25.0001			0-100 PSI	PRESSURE INDICATOR	25N50
PI-25.0002			0-100 PSI	PRESSURE INDICATOR	25N50
PI-25.0003			0-100 PSI	PRESSURE INDICATOR	25N50
PI-25.0101A			0-160 PSIG	PRESSURE INDICATOR	25N51
PI-25.0101B			0-160 PSIG	PRESSURE INDICATOR	25N51
PI-25.0201A			0-160 PSIG	PRESSURE INDICATOR	25N51
PI-25.0201B			0-600 PSIG	PRESSURE INDICATOR	25N51
PI-25.0301A			0-160 PSIG	PRESSURE INDICATOR	25N52
PI-25.0301B			0-600 PSIG	PRESSURE INDICATOR	25N52
PI-25.0401A			0-160 PSIG	PRESSURE INDICATOR	25N52
PI-25.0401B			0-600 PSIG	PRESSURE INDICATOR	25N52
PI-25.0904			0-100 PSI	PRESSURE INDICATOR	25N59
PI-65.0202			0-100 PSIG	NAHSO3 METERING PUMP DISCHARGE PRESSURE G	25N50
PI-66.0804			0-100 PSIG	H2SO4 METERING PUMPS DISCHARGE PRESSURE G	25N60
PI-66.0806			0-100 PSIG	H2SO4 METERING PUMPS DISCHARGE PRESSURE G	25N60
PI-76.0104			0-300 PSI	PRESSURE INDICATOR	21N60

Field Instruments

Specification: 17404

Tag	Type	Furnished By	Range	Description	Drawing #
PI-76.0105			0-300 PSI	PRESSURE INDICATOR	21N60

Specification: 17405

Tag	Type	Furnished By	Range	Description	Drawing #
PIT-21.0301	PRESSURE		0-300 PSIG	PRESSURE TRANSMITTER	21N10
PIT-21.0302	PRESSURE		0-300 PSIG	PRESSURE TRANSMITTER	21N10
PIT-21.0303	PRESSURE		0-300 PSIG	PRESSURE TRANSMITTER	21N10
PIT-21.0602	PRESSURE		0-___PSIG	PRESSURE TRANSMITTER	21N10
PIT-21.0701	PRESSURE		0-300 PSIG	PRESSURE TRANSMITTER	21N10
PIT-25.0001	PRESSURE		0-100 PSI	PRESSURE TRANSMITTER	25N50
PIT-25.0002	PRESSURE		0-100 PSI	PRESSURE TRANSMITTER	25N50
PIT-25.0003	PRESSURE		0-100 PSI	PRESSURE TRANSMITTER	25N50
PIT-25.0006A	PRESSURE		0-150 PSIG	PRESSURE TRANSMITTER	25N50
PIT-25.0007A	PRESSURE		0-150 PSIG	PRESSURE TRANSMITTER	25N50
PIT-25.0017	PRESSURE		0-75 PSIG	PRESSURE TRANSMITTER	25N53
PIT-25.0904	PRESSURE		0-100 PSI	PRESSURE TRANSMITTER	25N59
PIT-25.0905	PRESSURE		0-100 PSI	PRESSURE TRANSMITTER	25N59
PIT-71.5001	PRESSURE		0-100 PSIG	PRESSURE TRANSMITTER	25N53
PIT-71.5005	PRESSURE		0-60 PSIG	PRESSURE TRANSMITTER	25N53
PIT-71.5006	PRESSURE		0-60 PSIG	PRESSURE TRANSMITTER	25N53
PSL-25.0101	PRESSURE		0-160 PSIG	PRESSURE TRANSMITTER	25N51
PSL-25.0201	PRESSURE		0-160 PSIG	PRESSURE TRANSMITTER	25N51
PSL-25.0301	PRESSURE		0-160 PSIG	PRESSURE TRANSMITTER	25N52
PSL-25.0401	PRESSURE		0-160 PSIG	PRESSURE TRANSMITTER	25N52

Field Instruments

Specification: 17406

Tag	Type	Furnished By	Range	Description	Drawing #
LIT-25.0009	LEVEL		0-18 FT	LEVEL TRANSMITTER	25N53
LIT-25.0010	LEVEL		0-18 FT	LEVEL TRANSMITTER	25N53
LIT-25.0903	LEVEL		0-17 FT	LEVEL TRANSMITTER	25N53
PDI-25.0012	PRESS DIFF		0-25 PSIG	PRESSURE DIFFERENTIAL INDICATOR	25N53

Specification: 17501

Tag	Type	Furnished By	Range	Description	Drawing #
AIT-21.0603	pH		___-___ PH	PH	21N10
AIT-21.0605	pH		___-___ pH	Ph	21N10
AIT-25.0005A	pH		0-14 PH	PH	25N50
AIT-25.0904D	pH		0-14 PH	PH	25N59
AIT-25.0905C	pH		0-14 PH	PH	25N59
AIT-26.0401C	pH			pH	25N60

Specification: 17505

Tag	Type	Furnished By	Range	Description	Drawing #
AIT-24.0004	CL		0-5 MG/L	CHLORINE RESIDUAL	25N40
AIT-25.0005D	CL		0-5 MG/L	CHLORINE RESIDUAL	25N50
AIT-25.0904B	CL		0-5 MG/L	CHLORINE RESIDUAL	25N59
AIT-26.0401A	CL			CHLORINE RESIDUAL	25N60

Specification: 17509

Tag	Type	Furnished By	Range	Description	Drawing #
AIT-25.0005B	TURB		0-1000 NTU	TURBIDITY	25N50
AIT-25.0904C	TURB		0-5 NTU	TURBIDITY	25N59
AIT-25.0905B	TURB		0-5 NTU	TURBIDITY	25N59

Field Instruments

Specification: 17510

Tag	Type	Furnished By	Range	Description	Drawing #
AIT-21.0604	SC		-1000 - +1000 SCU	STREAMING CURRENT ANALYZER	21N10

Specification: 17511

Tag	Type	Furnished By	Range	Description	Drawing #
AIT-25.0005C	COND		0-20000 MG/L	CONDUCTIVITY INSTRUMENT	25N50
AIT-25.0006A	COND		___-___ mg/l	CONDUCTIVITY INSTRUMENT	25N50
AIT-25.0006B	COND		___-___ mg/l	CONDUCTIVITY INSTRUMENT	25N50
AIT-25.0904A	COND		0-60000 UOHMS/C	CONDUCTIVITY TRANSMITTER	25N59
AIT-25.0905A	COND		0-60000 UOHMS/C	CONDUCTIVITY TRANSMITTER	25N59
AIT-26.0301A	COND		0-2000 US/CM	CONDUCTIVITY INSTRUMENT	25N60
AIT-26.0401F	COND		___-___ MG/L	CONDUCTIVITY INSTRUMENT	25N60

Specification: 17529

Tag	Type	Furnished By	Range	Description	Drawing #
AIT-26.0401B	FL			CHLORINE RESIDUAL	25N60

Specification: 17542

Tag	Type	Furnished By	Range	Description	Drawing #
AE-24.0001	SDI		___-___ PPM	SILT DENSITY ANALYZER	25N40
AE-24.0002	SDI		___-___ PPM	SILT DENSITY ANALYZER	25N40
AIT-25.0005E	SDI		0-100 SDI	SILT DENSITY INDEX	25N50

Specification: 17604

Tag	Type	Furnished By	Range	Description	Drawing #
TIT-25.0009	RTD		0-150 DEG F	TEMPERATURE TRANSMITTER	25N53
TIT-25.0010	RTD		0-150 DEG F	TEMPERATURE TRANSMITTER	25N53

Field Instruments

Specification: 17622

Tag	Type	Furnished By	Range	Description	Drawing #
WIT-69.0101					25N90
WE1-69.0101					25N90
WIT-65.0201				NAHSO3 STORAGE TOTE NO. 1 WEIGHT TRANSMITTE	25N50

Specification: NR

Tag	Type	Furnished By	Range	Description	Drawing #
XS1-79.2001	INTRUSION			DOOR NO. 101-1 INTRUSION SWITCH	21N91
XS1-79.2002	INTRUSION			DOOR NO. 101-2 INTRUSION SWITCH	21N91
XS2-79.2001	INTRUSION			DOOR NO. 102-2 INTRUSION SWITCH	21N91
XS2-79.2002	INTRUSION			DOOR NO. 102-1 INTRUSION SWITCH	21N91
XS3-79.2001	INTRUSION			DOOR NO. 104-1 INTRUSION SWITCH	21N91

I/O Terminal Details

PLC-20.0000	Without Spares				With Spares			
	I/O Type	# of I/O	Min # of TB	Min Dinrail (in)	Spare IO	Total IO	Total TB	DIN Rail (in)
	AI	6	30	8	2	8	40	10
	DI	33	66	17	9	42	84	21
	DO	10	30	8	3	13	39	10
							Total DIN Rail (in)	42

PLC-20-0000	Without Spares				With Spares			
	I/O Type	# of I/O	Min # of TB	Min Dinrail (in)	Spare IO	Total IO	Total TB	DIN Rail (in)
	DI	1	2	1	1	2	4	1
							Total DIN Rail (in)	2

PLC-25.0000	Without Spares				With Spares			
	I/O Type	# of I/O	Min # of TB	Min Dinrail (in)	Spare IO	Total IO	Total TB	DIN Rail (in)
	AI	102	510	130	26	128	640	163
	AO	16	48	13	4	20	60	15
	DI	192	384	98	48	240	480	122
	DO	68	204	52	17	85	255	65
							Total DIN Rail (in)	365

I/O Terminal Details

PLC-25.0001	Without Spares				With Spares			
	I/O Type	# of I/O	Min # of TB	Min Dinrail (in)	Spare IO	Total IO	Total TB	DIN Rail (in)
	AI	49	245	63	13	62	310	79
	DI	120	240	61	30	150	300	76
	DO	81	243	62	21	102	306	78
							Total DIN Rail (in)	233

PLC-25.0904	Without Spares				With Spares			
	I/O Type	# of I/O	Min # of TB	Min Dinrail (in)	Spare IO	Total IO	Total TB	DIN Rail (in)
	AI	6	30	8	2	8	40	10
	AO	1	3	1	1	2	6	2
	DI	18	36	10	5	23	46	12
	DO	4	12	4	1	5	15	4
							Total DIN Rail (in)	27

PLC-60.0000	Without Spares				With Spares			
	I/O Type	# of I/O	Min # of TB	Min Dinrail (in)	Spare IO	Total IO	Total TB	DIN Rail (in)
	AI	5	25	7	2	7	35	9
	DI	48	96	25	12	60	120	30
	DO	15	45	12	4	19	57	14
							Total DIN Rail (in)	54

PLC I/O Listing for PLC-20.0000

Drawing	Tag	I/O	Location	Description	Service	(E/F)
21N10	F-21.0304	AI	PLC-20.0000		FLOW METER	
21N10	L-21.0302	AI	PLC-20.0000	LEVEL	ULTRASONIC LEVEL TRANSMITTER	
21N10	L-21.0305	AI	PLC-20.0000	LEVEL	ULTRASONIC LEVEL TRANSMITTER	
21N10	P-21.0301	AI	PLC-20.0000	PRESS	PRESSURE TRANSMITTER	
21N10	P-21.0302	AI	PLC-20.0000		PRESSURE TRANSMITTER	
21N10	P-21.0303	AI	PLC-20.0000		PRESSURE TRANSMITTER	
PLC-20.0000 Total AI Points = 6						

PLC I/O Listing for PLC-20.0000

Drawing	Tag	I/O	Location	Description	Service	(E/F)
21N50	AUX1-75.0301	DI	PLC-20.0000	RUNNING ENG	ENGINE GENERATOR	
21N90	AUX1-79.3001	DI	PLC-20.0000	RUNNING	AIR HANDLING UNIT AHU-103	
21N90	AUX1-79.3001	DI	PLC-20.0000	RUNNING	EXHAUST FAN EF-105	
21N90	AUX1-79.3002	DI	PLC-20.0000	RUNNING	AIR HANDLING UNIT AHU-104	
21N50	AUX2-75.0301	DI	PLC-20.0000	FAIL ENG	ENGINE GENERATOR	
21N90	AUX2-79.3001	DI	PLC-20.0000	FAILED	AIR HANDLING UNIT AHU-103	
21N90	AUX2-79.3002	DI	PLC-20.0000	FAILED	AIR HANDLING UNIT AHU-104	
21N50	ESL1-75.0301	DI	PLC-20.0000	LOW VOLT BATT	ENGINE GENERATOR	
21N50	ESL2-75.0301	DI	PLC-20.0000	PWR FAIL COMM	ENGINE GENERATOR	
21N10	HSAR-21.0102	DI	PLC-20.0000	REMOTE	RIVER INTAKE GATE 1	
21N10	HSAR-21.0103	DI	PLC-20.0000	REMOTE	RIVER INTAKE GATE 2	
21N90	HSAR-79.3001	DI	PLC-20.0000	REMOTE	EXHAUST FAN EF-105	
21N11	JS1-20.0000	DI	PLC-20.0000	24V PWR SUP FAIL	PCM CABINET	
21N11	JS2-20.0000	DI	PLC-20.0000	24V PWR SUP FAIL	PCM CABINET	
21N11	JS3-20.0000	DI	PLC-20.0000	DIODE BRIDGE FAIL	PCM CABINET	
21N50	L1-75.0301	DI	PLC-20.0000	LEAK DETECTED	ENGINE GENERATOR	
21N10	LSHH-21.0701	DI	PLC-20.0000	HIGH HIGH LEVEL		
21N50	LSL-75.0301	DI	PLC-20.0000	LOW FUEL ENG	ENGINE GENERATOR	
21N10	LSLL-21.0701	DI	PLC-20.0000	LOW LOW LEVEL		
21N90	PDSH-79.3001	DI	PLC-20.0000	DIRTY FILTER	PRESSURE DIFFERENTIAL TRANSMITTER	
21N90	PDSH-79.3002	DI	PLC-20.0000	DIRTY FILTER	PRESSURE DIFFERENTIAL TRANSMITTER	
21N11	TSH-20.0000	DI	PLC-20.0000	PLC TEMP	PCM CABINET	
21N11	XA5-20.0000	DI	PLC-20.0000	ES1 FAIL	UPS POWER STATUS	
21N90	XS1-79.3001	DI	PLC-20.0000	SMOKE	SMOKE DETECTOR	
21N90	XS1-79.3003	DI	PLC-20.0000	SMOKE	SMOKE DETECTOR	
21N91	XS-79.2001	DI	PLC-20.0000	INTRUSION	DOOR NO. 101-1 INTRUSION SWITCH	
21N60	YF-76.0101	DI	PLC-20.0000	TEMP	FISH SCREEN COMPRESSOR	

PLC I/O Listing for PLC-20.0000

Drawing	Tag	I/O	Location	Description	Service	(E/F)
21N11	ZS-20.0000	DI	PLC-20.0000	INTRUSION	PCM CABINET	
21N10	ZSC-21.0102	DI	PLC-20.0000	CLOSED	RIVER INTAKE GATE 1	
21N10	ZSC-21.0103	DI	PLC-20.0000	CLOSED	RIVER INTAKE GATE 2	
21N10	ZSO-21.0102	DI	PLC-20.0000	OPENED	RIVER INTAKE GATE 1	
21N10	ZSO-21.0103	DI	PLC-20.0000	OPENED	RIVER INTAKE GATE 2	
PLC-20.0000 Total DI Points = 32						
21N90	MS-79.3001	DO	PLC-20.0000	RUN	EXHAUST FAN EF-105	
21N50	STP-75.0301	DO	PLC-20.0000	STOP ENG	ENGINE GENERATOR	
21N11	XA1-20.0000	DO	PLC-20.0000	STROBE	PCM CABINET	
21N11	XA2-20.0000	DO	PLC-20.0000	HORN	PCM CABINET	
21N90	XS2-79.3003	DO	PLC-20.0000	SMOKE	SMOKE DETECTOR	
21N10	ZCC-21.0102	DO	PLC-20.0000	CLOSE	RIVER INTAKE GATE 1	
21N10	ZCC-21.0103	DO	PLC-20.0000	CLOSE	RIVER INTAKE GATE 2	
21N10	ZCO-21.0102	DO	PLC-20.0000	OPEN	RIVER INTAKE GATE 1	
21N10	ZCO-21.0103	DO	PLC-20.0000	OPEN	RIVER INTAKE GATE 2	
PLC-20.0000 Total DO Points = 9						

PLC I/O Listing for PLC-20-0000

Drawing	Tag	I/O	Location	Description	Service	(E/F)
21N10	LSH-21.0307	DI	PLC-20-0000	LEVEL	LEVEL SWITCH HIGH	
PLC-20-0000 Total DI Points = 1						

PLC I/O Listing for PLC-25.0000

Drawing	Tag	I/O	Location	Description	Service	(E/F)
21N10	A-21.0603	AI	PLC-25.0000	pH	PH	
21N10	A-21.0604	AI	PLC-25.0000	SC	STREAMING CURRENT ANALYZER	
21N10	A-21.0605	AI	PLC-25.0000	pH	PH	
25N50	A-25.0005A	AI	PLC-25.0000	pH	PH	
25N50	A-25.0005B	AI	PLC-25.0000	TURB	TURBIDITY	
25N50	A-25.0005C	AI	PLC-25.0000	COND	CONDUCTIVITY INSTRUMENT	
25N50	A-25.0005D	AI	PLC-25.0000	CL	CHLORINE RESIDUAL	
25N50	A-25.0005E	AI	PLC-25.0000	SDI	SILT DENSITY INDEX	
25N50	A-25.0006A	AI	PLC-25.0000	COND	CONDUCTIVITY INSTRUMENT	
25N50	A-25.0006B	AI	PLC-25.0000	COND	CONDUCTIVITY INSTRUMENT	
25N51	A-25.0102	AI	PLC-25.0000	COND	CONDUCTIVITY INSTRUMENT	
25N51	A-25.0103A	AI	PLC-25.0000	COND	CONDUCTIVITY INSTRUMENT	
25N51	A-25.0103B	AI	PLC-25.0000	COND	CONDUCTIVITY INSTRUMENT	
25N51	A-25.0103C	AI	PLC-25.0000	COND	CONDUCTIVITY INSTRUMENT	
25N51	A-25.0202	AI	PLC-25.0000	COND	CONDUCTIVITY INSTRUMENT	
25N51	A-25.0203A	AI	PLC-25.0000	COND	CONDUCTIVITY INSTRUMENT	
25N51	A-25.0203B	AI	PLC-25.0000	COND	CONDUCTIVITY INSTRUMENT	
25N51	A-25.0203C	AI	PLC-25.0000	COND	CONDUCTIVITY INSTRUMENT	
25N52	A-25.0302	AI	PLC-25.0000	COND	CONDUCTIVITY INSTRUMENT	
25N52	A-25.0303A	AI	PLC-25.0000	COND	CONDUCTIVITY INSTRUMENT	
25N52	A-25.0303B	AI	PLC-25.0000	COND	CONDUCTIVITY INSTRUMENT	
25N52	A-25.0303C	AI	PLC-25.0000	COND	CONDUCTIVITY INSTRUMENT	
25N52	A-25.0402	AI	PLC-25.0000	COND	CONDUCTIVITY INSTRUMENT	
25N52	A-25.0403A	AI	PLC-25.0000	COND	CONDUCTIVITY INSTRUMENT	
25N52	A-25.0403B	AI	PLC-25.0000	COND	CONDUCTIVITY INSTRUMENT	
25N52	A-25.0403C	AI	PLC-25.0000	COND	CONDUCTIVITY INSTRUMENT	
25N59	A-25.0904A	AI	PLC-25.0000	COND	CONDUCTIVITY TRANSMITTER	

PLC I/O Listing for PLC-25.0000

Drawing	Tag	I/O	Location	Description	Service	(E/F)
25N59	A-25.0904B	AI	PLC-25.0000	CL	CHLORINE RESIDUAL	
25N59	A-25.0904C	AI	PLC-25.0000	TURB	TURBIDITY	
25N59	A-25.0904D	AI	PLC-25.0000	pH	PH	
25N60	A-26.0301A	AI	PLC-25.0000	COND	CONDUCTIVITY INSTRUMENT	
21N10	F-21.0601	AI	PLC-25.0000		FLOW METER	
21N10	F-21.0602	AI	PLC-25.0000		FLOW METER	
21N10	F-21.0603	AI	PLC-25.0000		FLOW METER	
25N59	F-25.0001B	AI	PLC-25.0000		FLOW METER	
25N53	F-25.0018	AI	PLC-25.0000		FLOW METER	
25N51	F-25.0102	AI	PLC-25.0000	FLOW	VENTURI FLOW METER	
25N51	F-25.0103A	AI	PLC-25.0000	FLOW	VENTURI FLOW METER	
25N51	F-25.0103C	AI	PLC-25.0000	FLOW	VENTURI FLOW METER	
25N51	F-25.0202	AI	PLC-25.0000	FLOW	VENTURI FLOW METER	
25N51	F-25.0203A	AI	PLC-25.0000	FLOW	VENTURI FLOW METER	
25N51	F-25.0203C	AI	PLC-25.0000	FLOW	VENTURI FLOW METER	
25N52	F-25.0302	AI	PLC-25.0000	FLOW	VENTURI FLOW METER	
25N52	F-25.0303A	AI	PLC-25.0000	FLOW	VENTURI FLOW METER	
25N52	F-25.0303C	AI	PLC-25.0000	FLOW	VENTURI FLOW METER	
25N52	F-25.0402	AI	PLC-25.0000	FLOW	VENTURI FLOW METER	
25N52	F-25.0403A	AI	PLC-25.0000	FLOW	VENTURI FLOW METER	
25N52	F-25.0403C	AI	PLC-25.0000	FLOW	VENTURI FLOW METER	
25N53	F-25.0903	AI	PLC-25.0000		FLOW METER	
25N60	F-26.0301A	AI	PLC-25.0000		FLOW METER	
25N60	F-26.0301B	AI	PLC-25.0000		FLOW METER	
25N53	F-71.5001	AI	PLC-25.0000	TOTALIZE	FLOW TOTALIZER	
25N53	L-25.0009	AI	PLC-25.0000		LEVEL TRANSMITTER	
25N53	L-25.0010	AI	PLC-25.0000		LEVEL TRANSMITTER	

PLC I/O Listing for PLC-25.0000

Drawing	Tag	I/O	Location	Description	Service	(E/F)
25N53	L-25.0903	AI	PLC-25.0000		LEVEL TRANSMITTER	
21N10	P-21.0602	AI	PLC-25.0000		PRESSURE TRANSMITTER	
25N50	P-25.0006A	AI	PLC-25.0000		PRESSURE TRANSMITTER	
25N50	P-25.0007A	AI	PLC-25.0000		PRESSURE TRANSMITTER	
25N53	P-25.0017	AI	PLC-25.0000		PRESSURE TRANSMITTER	
25N51	P-25.0102	AI	PLC-25.0000	PRESS	PRESSURE TRANSMITTER	
25N51	P-25.0103A	AI	PLC-25.0000	PRESS	PRESSURE TRANSMITTER	
25N51	P-25.0103B	AI	PLC-25.0000	PRESS	PRESSURE TRANSMITTER	
25N51	P-25.0104A	AI	PLC-25.0000	PRESS	PRESSURE TRANSMITTER	
25N51	P-25.0104B	AI	PLC-25.0000	PRESS	PRESSURE TRANSMITTER	
25N51	P-25.0202	AI	PLC-25.0000	PRESS	PRESSURE TRANSMITTER	
25N51	P-25.0203A	AI	PLC-25.0000	PRESS	PRESSURE TRANSMITTER	
25N51	P-25.0203B	AI	PLC-25.0000	PRESS	PRESSURE TRANSMITTER	
25N51	P-25.0204B	AI	PLC-25.0000	PRESS	PRESSURE TRANSMITTER	
25N52	P-25.0302	AI	PLC-25.0000	PRESS	PRESSURE TRANSMITTER	
25N52	P-25.0303A	AI	PLC-25.0000	PRESS	PRESSURE TRANSMITTER	
25N52	P-25.0303B	AI	PLC-25.0000	PRESS	PRESSURE TRANSMITTER	
25N52	P-25.0304A	AI	PLC-25.0000	PRESS	PRESSURE TRANSMITTER	
25N52	P-25.0304B	AI	PLC-25.0000	PRESS	PRESSURE TRANSMITTER	
25N52	P-25.0402	AI	PLC-25.0000	PRESS	PRESSURE TRANSMITTER	
25N52	P-25.0403A	AI	PLC-25.0000	PRESS	PRESSURE TRANSMITTER	
25N52	P-25.0403B	AI	PLC-25.0000	PRESS	PRESSURE TRANSMITTER	
25N52	P-25.0404A	AI	PLC-25.0000	PRESS	PRESSURE TRANSMITTER	
25N52	P-25.0404B	AI	PLC-25.0000	PRESS	PRESSURE TRANSMITTER	
25N59	P-25.0904	AI	PLC-25.0000	PRESS	PRESSURE TRANSMITTER	
25N51	P-25.204A	AI	PLC-25.0000	PRESS	PRESSURE TRANSMITTER	
25N53	P-71.5001	AI	PLC-25.0000		PRESSURE TRANSMITTER	

PLC I/O Listing for PLC-25.0000

Drawing	Tag	I/O	Location	Description	Service	(E/F)
25N53	P-71.5005	AI	PLC-25.0000		PRESSURE TRANSMITTER	
25N53	P-71.5006	AI	PLC-25.0000		PRESSURE TRANSMITTER	
25N51	SB-25.0101	AI	PLC-25.0000	SPEED IN	RO FEED PUMP NO.1	
25N51	SB-25.0104	AI	PLC-25.0000	SPEED IN	RO BOOSTER PUMP NO.1	
25N51	SB-25.0201	AI	PLC-25.0000	SPEED IN	RO FEED PUMP NO.2	
25N51	SB-25.0204	AI	PLC-25.0000	SPEED IN	RO BOOSTER PUMP NO.2	
25N52	SB-25.0301	AI	PLC-25.0000	SPEED IN	RO FEED PUMP NO.3	
25N52	SB-25.0401	AI	PLC-25.0000	SPEED IN	RO FEED PUMP NO.4	
25N52	SB-25.0404	AI	PLC-25.0000	SPEED IN	RO BOOSTER PUMP NO.4	
25N53	T-25.0009	AI	PLC-25.0000		TEMPERATURE TRANSMITTER	
25N53	T-25.0010	AI	PLC-25.0000		TEMPERATURE TRANSMITTER	
25N59	T-25.0904D	AI	PLC-25.0000	TEMP	PH	
25N53	Z-25.0012	AI	PLC-25.0000	POSITION	ELECTRIC ANALOG MODULATING VALVE	
25N51	Z-25.0103A	AI	PLC-25.0000	POSITION	ELECTRIC ANALOG MODULATING VALVE	
25N51	Z-25.0203A	AI	PLC-25.0000	POSITION	ELECTRIC ANALOG MODULATING VALVE	
25N52	Z-25.0303A	AI	PLC-25.0000	POSITION	ELECTRIC ANALOG MODULATING VALVE	
25N52	Z-25.0403A	AI	PLC-25.0000	POSITION	ELECTRIC ANALOG MODULATING VALVE	
25N53	Z-25.0903E	AI	PLC-25.0000	POSITION	ELECTRIC ANALOG MODULATING VALVE	
25N60	Z-26.0301A	AI	PLC-25.0000	POSITION	BLEND WATER FLOW CONTROL VALVE	
25N60	Z-26.0301B	AI	PLC-25.0000	POSITION	BLEND WATER FLOW CONTROL VALVE	
PLC-25.0000 Total AI Points = 101						

PLC I/O Listing for PLC-25.0000

Drawing	Tag	I/O	Location	Description	Service	(E/F)
25N51	SS-25.0101	AO	PLC-25.0000	SPEED OUT	RO FEED PUMP NO.1	
25N51	SS-25.0104	AO	PLC-25.0000	SPEED OUT	RO BOOSTER PUMP NO.1	
25N51	SS-25.0201	AO	PLC-25.0000	SPEED OUT	RO FEED PUMP NO.2	
25N51	SS-25.0204	AO	PLC-25.0000	SPEED OUT	RO BOOSTER PUMP NO.2	
25N52	SS-25.0301	AO	PLC-25.0000	SPEED OUT	RO FEED PUMP NO.3	
25N52	SS-25.0401	AO	PLC-25.0000	SPEED OUT	RO FEED PUMP NO.4	
25N52	SS-25.0404	AO	PLC-25.0000	SPEED OUT	RO BOOSTER PUMP NO.4	
25N53	ZC-25.0012	AO	PLC-25.0000	POSITION	ELECTRIC ANALOG MODULATING VALVE	
25N51	ZC-25.0103A	AO	PLC-25.0000	POSITION	ELECTRIC ANALOG MODULATING VALVE	
25N51	ZC-25.0203A	AO	PLC-25.0000	POSITION	ELECTRIC ANALOG MODULATING VALVE	
25N52	ZC-25.0303A	AO	PLC-25.0000	POSITION	ELECTRIC ANALOG MODULATING VALVE	
25N52	ZC-25.0403A	AO	PLC-25.0000	POSITION	ELECTRIC ANALOG MODULATING VALVE	
25N53	ZC-25.0903E	AO	PLC-25.0000	POSITION	ELECTRIC ANALOG MODULATING VALVE	
25N60	ZC-26.0301A	AO	PLC-25.0000	POSITION	BLEND WATER FLOW CONTROL VALVE	
25N60	ZC-26.0301B	AO	PLC-25.0000	POSITION	BLEND WATER FLOW CONTROL VALVE	
PLC-25.0000 Total AO Points = 15						

NOTE: ONLY HALF OF INTAKE SCREEN INSTALLATION IS SHOWN IN THIS DETAIL, PROVIDE COMPLETE ASSEMBLIES FOR BOTH SCREENS.

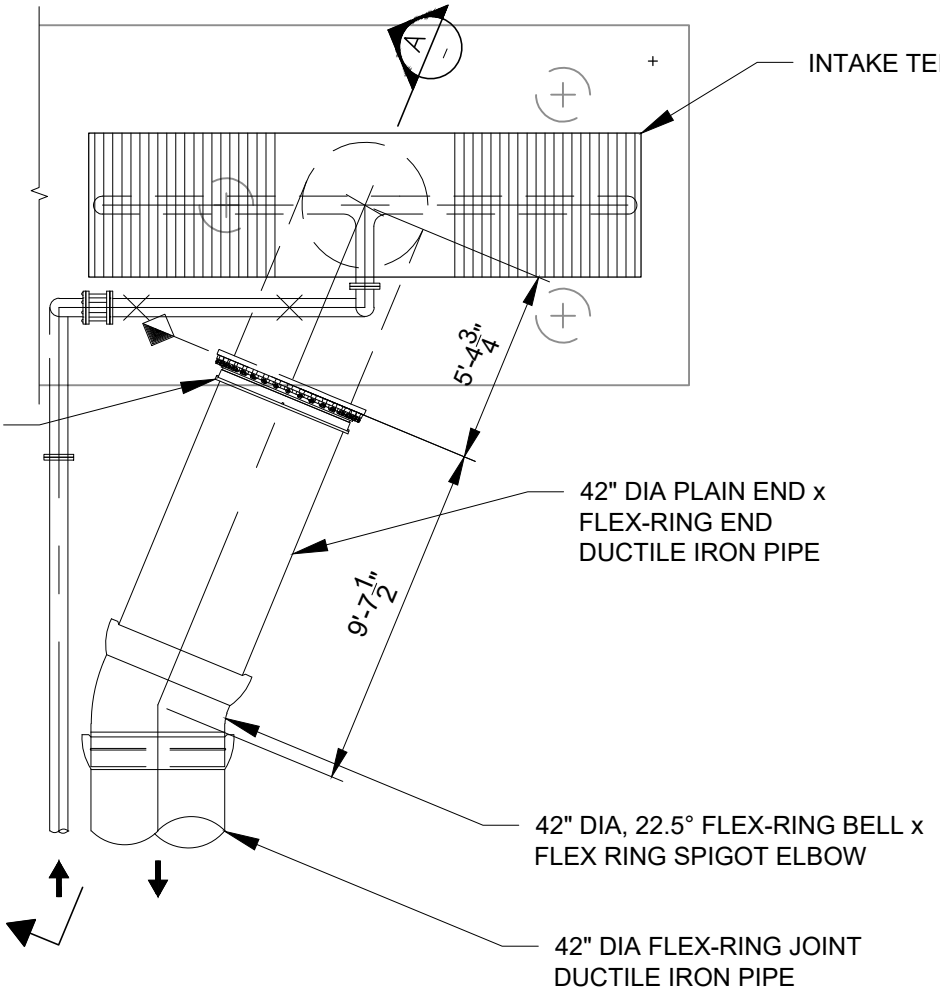

- FISH SCREEN PLAN VIEW
SCALE: 3/16" = 1'-0"

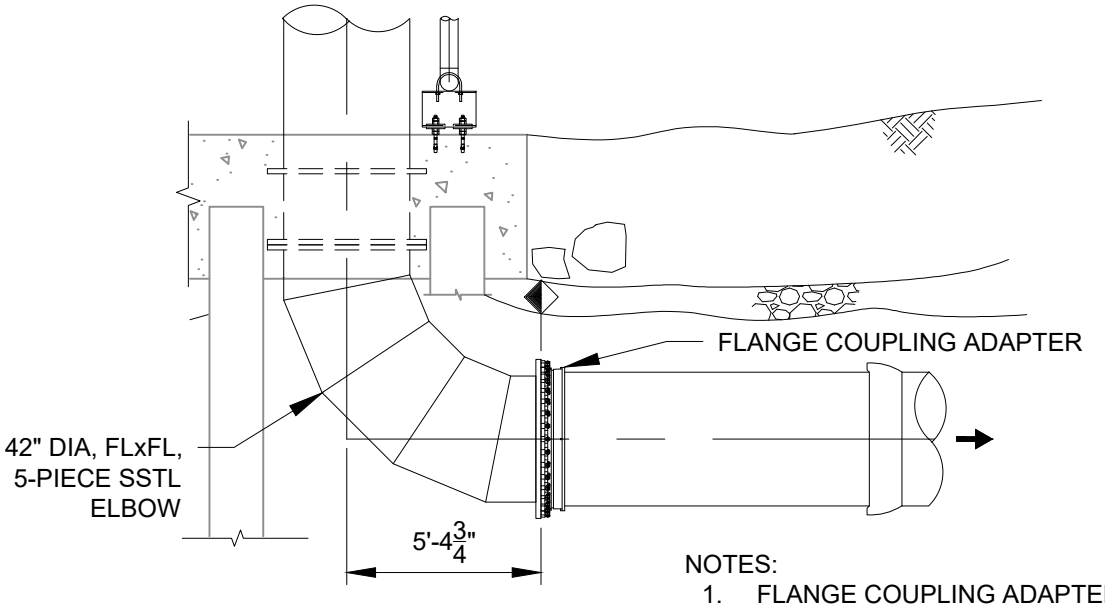

A SECTION
SCALE: 3/16" = 1'-0"

NOTES:

1. FLANGE COUPLING ADAPTER SHALL BE MEGAFLANGE 2100 W/ SS HARDWARE AS MANUFACTURED BY EBAA IRON OR EQUAL. INSTALLATION SHALL INCLUDE COMPLETE BOLT AND FLANGE ISOLATION KITS BETWEEN DUCTILE IRON AND SSTL FLANGES

ADDENDUM NO. 3
ANTIOCH BRACKISH WATER DESALINATION PROJECT

FIG. 1

GENERAL NOTES:

1. USE STRUCTURAL DRAWINGS IN CONJUNCTION WITH PROJECT DRAWINGS BY OTHER DISCIPLINES AND WITH THE SPECIFICATIONS.

2. UNLESS DETAILED, SPECIFIED, OR INDICATED OTHERWISE, CONSTRUCTION SHALL BE AS INDICATED IN THE GENERAL NOTES AND TYPICAL DETAILS.

3. PRESENTATION CONVENTIONS FOR STRUCTURAL DRAWINGS:

   A. SCREENED LINE WORK INDICATES EXISTING CONDITIONS.
   B. WRITTEN DIMENSIONS TAKE PRECEDENCE OVER SCALED SIZES.
   C. PLANS ARE TREATED AS HORIZONTAL SECTIONS. (I.E.: "PLAN AT ELEVATION 110" SHOWS CONSTRUCTION AT AND BELOW ELEVATION 110.)

4. VERIFY DIMENSIONS AND CONDITIONS BEFORE BEGINNING WORK. ADVISE ENGINEER IMMEDIATELY OF DISCREPANCIES BETWEEN EXISTING CONDITIONS AND DIMENSIONS, AND INFORMATION SHOWN ON THESE DRAWINGS. CONFIRM THE FOLLOWING BEFORE PREPARATION AND SUBMITTAL OF SHOP DRAWINGS:

   A. DIMENSIONS AND WEIGHTS FOR EQUIPMENT SELECTED.
   B. SIZES AND LOCATIONS OF EQUIPMENT PADS FOR EQUIPMENT SELECTED.

5. TYPICAL DETAILS ARE INCLUDED ON THE "TS" DRAWINGS.

   A. TYPICAL DETAILS ARE INTENDED TO APPLY AT LOCATIONS DESCRIBED BY THEIR TITLES, EVEN WHEN NOT SPECIFICALLY REFERENCED ON THE DRAWINGS.
   B. IN STRUCTURAL TYPICAL DETAILS, ORIENTATION OF BARS IN EACH MAT OF REINFORCEMENT (WHETHER "LINES" OR "DOTS"ARE CLOSER TO THE FACE OF THE CONCRETE) IS GENERALLY ARBITRARY. SEE DRAWINGS OF EACH STRUCTURE FOR ORIENTATION REQUIRED AT THAT STRUCTURE.

6. SEE CIVIL DRAWINGS FOR STRUCTURE COORDINATES. POINTS ON THE STRUCTURES TO WHICH SITE COORDINATES REFER ARE SHOWN ON THE STRUCTURAL PLANS.

7. DRAWINGS PREPARED BY OTHER DISCIPLINES INCLUDE OPENINGS, ANCHORS, PIPES, CONDUITS, AND OTHER ITEMS THAT ARE EMBEDDED INTO OR PASS THROUGH STRUCTURES.

   A. CONFIRM SIZE AND LOCATIONS OF OPENINGS, PENETRATIONS AND EMBEDMENT FOR ITEMS AND EQUIPMENT FURNISHED.
   B. IN GENERAL, OPENINGS, EMBEDMENTS, AND PENETRATIONS LESS THAN 12 INCHES IN DIAMETER ARE NOT SHOWN ON THE STRUCTURAL DRAWINGS.
   C. SEE MECHANICAL DRAWINGS FOR DETAILS OF PIPE PENETRATIONS, PIPE SUPPORTS, AND ASSOCIATED STRUCTURAL REQUIREMENTS.
   D. SEE MECHANICAL DRAWINGS FOR EQUIPMENT PADS AND PIPE SUPPORTS.

8. SEE ARCHITECTURAL DRAWINGS FOR LOCATIONS AND SIZES OF DOOR AND WINDOW OPENINGS.

STRUCTURAL DESIGN CRITERIA - GENERAL:

SEE DRAWINGS OF INDIVIDUAL STRUCTURES FOR SPECIFIC DESIGN CRITERIA BASED ON THESE OVERALL CRITERIA FOR THE SITE.

1. BUILDING CODE:

   A. 2019 CALIFORNIA BUILDING CODE ASCE 7-16 MINIMUM DESIGN LOADS FOR BUILDING AND OTHER STRUCTURES.

2. STRUCTURE RISK CATEGORY: SEE PLANS FOR EACH STRUCTURE.

3. DEAD LOADS: CALCULATED FOR STRUCTURE SELF-WEIGHT.

4. LIVE LOADS: (REDUCTIONS NOT USED)

   A. FLOOR LIVE LOAD: SEE PLANS.
   B. GRATING AND CHECKERED PLATE: 100 PSF (UNO).
   C. ROOF LIVE LOAD: SEE PLANS (20 PSF MINIMUM).
   D. EQUIPMENT LOADS: SEE PLANS.
   E. CONCENTRATED AND IMPACT LOADS: SEE PLANS.

5. FLUID PRESSURE LOADS: 63 PSF/FT (UNO).

6. WIND DESIGN DATA:
   FOR DESALINATION FACILITY
   A. SPECIAL WIND REGION: NO - HURRICANE: NO
   B. WIND-BORNE DEBRIS REGION:
   C. BASIC WIND SPEED (3 SEC GUST, 33 FEET ABOVE GROUND): 115 MPH.

7. EARTHQUAKE DESIGN DATA: FOR DESALINATION FACILITY

		0.2 SECOND	*1.0 SECOND
A.	SITE CLASS: __C__.		
B.	MAPPED SPECTRAL RESPONSE ACCELERATIONS:	Ss = 1.591 g	S1 = 0.544 g
C.	SITE COEFFICIENTS:	Fa = 1.2	Fv = 1.46
D.	MAXIMUM CONSIDERED ACCELERATIONS:*	Sms =1.91 g	Sm1 = 0.793 g
E.	DESIGN SPECTRAL RESPONSE ACCELERATIONS:* (* 5% DAMPED)	Sds = 1.273 g	Sd1 = 0.528 g

8. FLOOD LOADS:

   A. FLOOD HAZARD AREA: NO

FOR BRINE PIPE LINE

A. SITE CLASS D (STIFF SOIL)		
B. MAPPED SPECTRAL RESPONSE ACCELERATIONS	Ss = 1.699g	S1 = 0.573g
C. SITE COEFFICIENTS	Fa = 1	Fv = NULL
	Fv = SEE SECTION 11.4.8	
D. MAXIMUM CONSIDERED ACCELERATIONS*	Sms = 1.699g	Sm1 = NULL
	Sm1 = SEE SECTION 11.4.8	
E. DESIGN SPECTRAL ACCELERATIONS* (* 5% DAMPED)	Sds = 1.133g	Sd1 = NULL
	Sd1 = SEE SECTION 11.4.8	

FOR RIVER PUMP STATION

A. SITE CLASS D (STIFF SOIL)		
B. MAPPED SPECTRAL RESPONSE ACCELERATIONS	Ss = 1.557g	S1 = 0.529g
C. SITE COEFFICIENTS	Fa = 1	Fv = NULL
	Fv = SEE SECTION 11.4.8	
D. MAXIMUM CONSIDERED ACCELERATIONS*	Sms = 1.557g	Sm1 = NULL
	Sm1 = SEE SECTION 11.4.8	
E. DESIGN SPECTRAL ACCELERATIONS* (* 5% DAMPED)	Sds = 1.038g	Sd1 = NULL
	Sd1 = SEE SECTION 11.4.8	

9. CONSTRUCTION LOADS:
   STRUCTURES HAVE BEEN DESIGNED FOR OPERATING LOADS ON COMPLETED FACILITIES. UNTIL CONSTRUCTION IS COMPLETE AND MEMBERS HAVE ACHIEVED THEIR DESIGN STRENGTH, PROTECT STRUCTURES AS REQUIRED BY SHORING, BRACING, AND BALANCING.

GEOTECHNICAL REPORT / FOUNDATION DESIGN CRITERIA:

1. GEOTECHNICAL INVESTIGATION REPORT:

   TITLE: GEOTECHNICAL INVESTIGATION: VOLUME I TO IV GEOTECHNICAL DATA REPORT , CITY OF ANTIOCH
   PREPARED BY: HULTGREN - TILLIS.
   REPORT NO: 909.1 DATED:JUNE 24 2020.

2. FOUNDATION DESIGNS ARE BASED ON RECOMMENDATIONS IN THE GEOTECHNICAL INVESTIGATION REPORT.

   A.
   I. SHALLOW FOUNDATIONS SHOULD BE DESIGNED USING ALLOWABLE BEARING PRESSURES OF 3,000 POUNDS PER SQUARE FOOT (PSF) FOR DEAD PLUS SUSTAINED LIVE LOADS AND 4,500 PSF FOR TOTAL LOADS INCLUDING WIND OR SEISMIC FORCES.

   II. FOUNDATIONS AND FOOTINGS FOR CLEAR WELL 'A' STRUCTURES SHOULD BE DESIGNED USING ALLOWABLE BEARING PRESSURES OF 2,500 POUNDS PER SQUARE FOOT(PSF) FOR DEAD PLUS SUSTAINED LIVE LOADS AND 3,300 PSF FOR TOTAL LOADS INCLUDING WIND OR SEISMIC FORCES.

   B. LATERAL EARTH PRESSURE (UNO):
   SURCHARGE: HIGHER OR EQUIVALENT TO 2 FEET (FOR C.I.P. RETAINING WALLS ONLY) OF SOIL ABOVE FINISHED GRADE.

	STATIC	SEISMIC
ACTIVE (PSF/FT):	95	10H *(PSF/FT, ADDITIVE TO ACTIVE PRESSURE)
PASSIVE (PSF/FT):	350	
SLIDING COEFFICIENT OF FRICTION:	0.35	

   * WHERE H IS HEIGHT OF THE RETAINING WALL

TYPICAL STRUCTURAL MATERIALS:

1. MATERIALS SHALL CONFORM TO THE FOLLOWING REQUIREMENTS UNLESS OTHERWISE INDICATED ON THE DRAWINGS.

2. SEE PROJECT SPECIFICATIONS AND NOTES ON DRAWINGS OF SPECIFIC STRUCTURES FOR DETAILED AND LOCATION-SPECIFIC REQUIREMENTS.

REINFORCING STEEL (FOR CONCRETE AND MASONRY):

1. DEFORMED BARS:
   A. TYPICAL: ASTM A 615, GRADE 60.
   B. WHERE INDICATED ON THE DRAWINGS: ASTM A 706.

2. WELDED WIRE FABRIC: ASTM A 185.

3. HORIZ JOINT REINF (FOR MASONRY: ASTM A 951, 3/16"DIA x 2 RODS), GALV.

CONCRETE:

1. NORMAL DENSITY.

2. MINIMUM SPECIFIED CONCRETE COMPRESSIVE STRENGTH, f'c (AT 28 DAYS UNO).

   A. STRUCTURES: "CLASS A"OR "CLASS B" f'c = 4500 PSI.
   FOR DRILLED PIERS: "CLASS B" f'c = 5000 PSI
   B. FILL AND THRUST BLOCKS: "CLASS C" f'c = 2500 PSI.
   C. PIPE ENCASEMENT: FOR DRILLED PIERS, "CLASS A" f'c = 4500PSI.
   D. ELECTRICAL DUCT ENCASEMENT: "CLASS CE" f'c = 2500 PSI.

MASONRY:

1. CONCRETE MASONRY

   A. UNITS: ASTM C 90, NORMAL WEIGHT.
   B. MORTAR: ASTM C 270, MINIMUM 28-DAY COMPRESSIVE STRENGTH = 2000 PSI.
   C. GROUT: ASTM C 476. MINIMUM 28-DAY COMPRESSIVE STRENGTH = 2000 PSI.

   D. MINIMUM SPECIFIED COMPRESSIVE STRENGTH, f'm (AT 28 DAYS).
      1) SOLID GROUTED: f'm = 2000 PSI.
      2) PARTIALLY GROUTED: f'm = 2000 PSI.

STRUCTURAL STEEL:

1. SECTIONS

   A. SHAPES W, WT: ASTM A 992 (Fy = 50 KSI)
   B. SHAPES S, ST, M, MT, HP, C, MC, L: ASTM A 36 (Fy = 36 KSI)
   C. PLATES AND BARS: ASTM A 36 (Fy = 36 KSI)
   D. PIPES: ASTM A 53, GRADE B (Fy = 35 KSI)
   E. HOLLOW STRUCTURAL SECTIONS:
      ROUND: ASTM A 500, GRADE B (Fy = 42 KSI)
      SQUARE AND RECTANGULAR: ASTM A 500, GRADE B (Fy = 46 KSI)

2. CONNECTIONS:

   A. BOLTS - STEEL TO-STEEL:
      ASTM A 325 HIGH-STRENGTH BOLTS, WITH LOAD INDICATOR WASHERS.
   B. BOLTS - STEEL TO CONCRETE OR MASONRY:
      ANCHOR BOLTS WITH HEX FORGED HEAD.
      ASTM A193, STAINLESS TYPE 316
      ASTM F 1554, GRADE 36 (SEE DRAWINGS) GALVANIZED.
   C. WELDS - SHIELDED METAL ARC PROCESS USING E70-XX ELECTRODES.

STAINLESS STEEL:

1. ANSI TYPE 316/316L EXCEPT WHERE TYPE 304/304L IS INDICATED ON THE DRAWINGS.

2. SECTIONS: SHAPES AND BARS: ASTM A 276.

3. BOLTED CONNECTIONS - BOLTS AND ANCHOR BOLTS:

   A. MATCH ALLOY OF THE STRUCTURAL MEMBERS CONNECTED.
   B. TYPE 316/316L: ASTM A 193, GRADE B8M, CLASS 1, HEAVY HEX.
   C. TYPE 304/304L: ASTM A 193, GRADE B8, CLASS 1, HEAVY HEX.

4. WELDED CONNECTIONS:

   A. TYPE 316L: E316L-15 ELECTRODES.
   B. TYPE 304L: E304L-15 ELECTRODES.

STRUCTURAL ALUMINUM:

1. SECTIONS

   A. SHAPES: ASTM B 308, ALLOY 6061-T6.
   B. SHEET AND PLATE: ASTM B 209, ALLOY 6061-T6.

2. BOLTED CONNECTIONS - BOLTS AND ANCHOR BOLTS:

   A. STAINLESS STEEL - TYPE 316, ASTM A 193, GRADE B8M, CLASS 1, HEAVY HEX.

3. WELDED CONNECTIONS:

   A. GAS METAL ARC (MIG) OR GAS TUNGSTEN ARC (TIG) PROCESS USING FILLER ALLOY 4043 ELECTRODES.

CONSTRUCTION:

CONFORM TO THE FOLLOWING REQUIREMENTS UNLESS OTHERWISE INDICATED ON THE DRAWINGS.

EXCAVATION AND BACKFILLING:

1. EXPOSE AND PREPARE SUBGRADE AS SHOWN ON THE DRAWINGS AND SPECIFIED. OBTAIN ENGINEER'S OBSERVATION OF SUBGRADE SURFACES, AS EXPOSED AND AS PREPARED, BEFORE PROCEEDING WITH FOUNDATION CONSTRUCTION.

2. DO NOT PLACE BACKFILL AGAINST WALLS UNTIL STRUCTURES SUPPORTING THE TOP OF THE WALL ARE IN PLACE, ARE COMPLETE, AND (IN THE CASE OF CONCRETE) HAVE CURED TO THEIR MINIMUM SPECIFIED 28-DAY COMPRESSIVE STRENGTH.

3. WHERE BACKFILL MUST BE PLACED AGAINST WALLS BEFORE STRUCTURES ABOVE ARE COMPLETE, PROVIDE BRACING FOR WALLS. KEEP BRACING IN PLACE UNTIL THE STRUCTURE ABOVE IS COMPLETE AND (IN THE CASE OF CONCRETE) HAS CURED TO ITS MINIMUM SPECIFIED 28-DAY COMPRESSIVE STRENGTH.

CONCRETE:

1. SEE S101/TYP FOR CONCRETE NOTES, INCLUDING CLEAR COVER AND LAP SPLICE LENGTH REQUIREMENTS FOR REINFORCING.

2. SUBMIT LOCATIONS OF CONSTRUCTION JOINTS NOT SHOWN ON THE DRAWINGS FOR ACCEPTANCE BY THE ENGINEER BEFORE FORM LAYOUT.

3. PROVIDE CHAMFER AT EXPOSED EDGES OF CAST-IN-PLACE CONCRETE. SEE SPECIFICATION 03102 FOR CHAMFERS.

4. PROVIDE REINFORCING:

   A. AT CORNERS AND JUNCTIONS - AS INDICATED IN S144/TYP, SUPPLEMENT WITH ADDED BARS WHERE INDICATED ON THE DRAWINGS.
   B. AT OPENINGS - AS INDICATED IN S180/TYP.

5. WELDING OF REINFORCING IS NOT PERMITTED UNLESS DETAILED ON THE DRAWINGS OR ACCEPTED IN ADVANCE BY THE ENGINEER.

6. MAINTAIN MINIMUM 3 INCHES CLEAR CONCRETE COVER BETWEEN REINFORCING AND EMBEDMENTS.

7. FINISH CONCRETE AS SPECIFIED IN SECTION 03366.

8. CONCRETE PADS

   A. (E) EQUIPMENT PAD SEE S302/TYP.

   B. (H) HOUSEKEEPING PAD FOR ELECTRICAL EQUIPMENT SEE S350/TYP.

MASONRY:

1. SEE S400/TYP FOR MASONRY NOTES, INCLUDING LAP SPLICE LENGTHS.

2. PROVIDE REINFORCING:

   A. AT CORNERS AND JUNCTIONS AS INDICATED IN S412/TYP.
   B. AT OPENINGS AS INDICATED IN S410/TYP.

3. WELDING OF REINFORCING IS NOT PERMITTED UNLESS DETAILED ON THE DRAWINGS OR ACCEPTED IN ADVANCE BY THE ENGINEER.

4. GROUTING:

   A. FULLY GROUTED.

STEEL, STAINLESS STEEL, AND ALUMINUM - CONNECTIONS:

1. BOLTED:

   A. MADE USING 3/4-INCH DIAMETER BOLTS.
   B. HAVING A MINIMUM OF 2 BOLTS, SPACED NOT CLOSER THAN 3 INCHES ON CENTER.
   C. WITH A DISTANCE OF AT LEAST 1 1/2 INCHES FROM CENTER OF BOLT TO ANY EDGE OF A PLATE OR STRUCTURAL ELEMENT.

2. WELDED:

   A. FILLET WELDS: PER AWS CODE BASED ON THE THICKNESS OF THE MATERIALS BEING JOINED, AND FULL LENGTH OF THE JOINT.

3. INTERFACE BETWEEN MATERIALS:

   A. AT BOLTED CONNECTIONS THAT INCLUDE DIFFERENT METALS (E.G.: STEEL AND STAINLESS STEEL, OR ALUMINUM AND STAINLESS STEEL) PROVIDE ISOLATING SLEEVES AND WASHERS AS SPECIFIED IN SECTION 05190.
   B. WHERE ALUMINUM IS IN CONTACT WITH MASONRY OR CONCRETE, COAT ALUMINUM SURFACES AS SPECIFIED IN SECTION 09960.

4. POST-INSTALLED ANCHORS IN CONCRETE AND MASONRY:

   A. INSTALL IN FULL COMPLIANCE WITH ACCEPTED BUILDING CODE EVALUATION REPORT AND MANUFACTURER'S INSTRUCTIONS.
   B. DO NOT CUT, DAMAGE, OR INTERRUPT EXISTING REINFORCEMENT TO INSTALL ANCHORS. USE NON-DESTRUCTIVE TESTING EQUIPMENT TO IDENTIFY LOCATIONS OF REINFORCEMENT IN MEMBERS BEFORE DRILLING HOLES FOR ANCHORS.

METAL FABRICATIONS:

1. HANDRAILS AND GUARDRAILS:

   A. ALUMINUM, EXCEPT WHERE OTHER MATERIALS ARE NOTED.

2. GRATING:

   A. ALUMINUM WITH TYPE 316 STAINLESS STEEL FASTENERS, UNLESS OTHERWISE NOTED.
   B. GRATING AND ITS SEATS OR SUPPORTS SHALL BE OF THE SAME MATERIAL.
   C. UNLESS INDICATED ON THE DRAWINGS AS "REMOVABLE GRATING", SECURELY FASTEN GRATING TO SUPPORTS AS INDICATED IN S544/TYP.

3. COVER PLATES:

   A. ALUMINUM WITH TYPE 316 STAINLESS STEEL FASTENERS, UNLESS OTHERWISE NOTED.
   B. COVER PLATE AND ITS SEATS OR SUPPORTS SHALL BE OF THE SAME MATERIAL.

SPECIAL INSPECTION:

1. SPECIAL INSPECTION IS REQUIRED FOR THE FOLLOWING STRUCTURAL MATERIALS AND CONSTRUCTION. SEE SPECIFICATION SECTION 01455 FOR DETAILS.

2. DIVISION 2 SITE CONSTRUCTION (EARTHWORK)

   A. EXCAVATION DEPTH.
   B. ADEQUACY OF EXPOSED SURFACE TO PROVIDE REQUIRED SUPPORT.
   C. PREPARATION OF SOILS/SURFACES SUPPORTING CONSTRUCTION.
   D. FILL AND BACKFILL.
   E. DRILLED PIERS.

3. DIVISION 3 CONCRETE:

   A. LOCATIONS.
   B. FORMWORK AND MEMBER SIZES.
   C. REINFORCING STEEL.
   D. ANCHORS: CAST-IN AND POST-INSTALLED.
   E. CONCRETE MIX AND PLACEMENT.
   F. PROTECTION AND CURING PROCEDURES.

4. DIVISION 4 MASONRY

   A. LOCATIONS.
   B. MEMBER SIZES.
   C. REINFORCING STEEL.
   D. ANCHORS: BUILT-IN AND POST-INSTALLED.
   E. MORTAR AND JOINTS.
   F. GROUT AND GROUTING.
   G. PROTECTION AND CURING PROCEDURES.

5. DIVISION 5 METALS

   A. GENERAL ALL METALS:
      1) MEMBER LOCATIONS.
      2) MEMBER SIZES/TYPES.
      3) ANCHORS - CAST-IN AND BUILT-IN ANCHOR BOLTS.
      4) ANCHORS - POST-INSTALLED MECHANICAL AND ADHESIVE.

   B. STRUCTURAL STEEL (CARBON AND STAINLESS).
      1) HIGH-STRENGTH BOLTING.
      2) WELDING.

   C. STRUCTURAL ALUMINUM.
      1) BOLTING.
      2) WELDING.

   D. STEEL JOISTS AND JOIST GIRDERS.
      1) CONNECTIONS.
      2) BRACING.

   E. STEEL DECKING.
      1) CONNECTIONS TO SUPPORTS.
      2) SIDE CONNECTIONS BETWEEN ADJACENT SHEETS.

   F. COLD-FORMED STEEL LIGHT-FRAME CONSTRUCTION.

6. DIVISION 6 WOOD, PLASTICS AND COMPOSITES.

STRUCTURAL OBSERVATION:

1. STRUCTURAL OBSERVATION IS REQUIRED DURING AND AT SPECIFIC STAGES OF CONSTRUCTION. SEE SPECIFICATION SECTION 01455 FOR DETAILS.

STEEL JOISTS: (1)

1. ALL OPEN WEB JOIST AND JOIST GIRDERS SHALL BE FABRICATED, FURNISHED, AND ERECTED IN ACCORDANCE WITH THE STEEL JOIST INSTITUTE'S STANDARD SPECIFICATIONS FOR OPEN WEB STEEL JOISTS, LATEST EDITION.

2. THE DESIGN OF ALL STEEL JOIST AND JOIST GIRDERS SHALL BE BY THE MANUFACTURER'S ENGINEER. ALL JOIST AND JOIST GIRDERS ALONG WITH THE BRIDGING SHALL BE DESIGNED FOR
   THE GRAVITY LOADS OF THE PROJECT IN ADDITION TO THE WIND AND SEISMIC LOADS SHOWN ON THE STRUCTURAL DRAWINGS AND THE MECHANICAL LOADS SHOWN ON THE MECHANICAL DRAWINGS.

3. BEARING LENGTH SHALL BE IN ACCORDANCE WITH STEEL JOIST INSTITUTE'S STANDARD SPECIFICATIONS BEARING PLATES AND ANGLES SHALL BE ADJUSTED TO PROVIDE LEVEL BEARING ON SUPPORT SURFACE.

4. SHOP DRAWINGS SHALL BE SUBMITTED COMPLETELY DETAILING THE JOISTS FOR ERECTION. INCLUDE ALL BRIDGING AND CONNECTIONS. CALCULATIONS AND SHOP DRAWINGS SHALL BE SIGNED, SEALED, AND DATED BY A STRUCTURAL ENGINEER REGISTERED IN THE STATE OF THE PROJECT.

5. PROVIDE A SHOP COAT OF STANDARD PRIMER PAINT. COLOR TO BE SPECIFIED BY THE OWNER. PRIMER TO BE COMPATIBLE WITH FINISH COAT WHERE APPLICABLE. TOUCH UP DAMAGED AREAS WITH SAME PAINT USED FOR SHOP COAT.

STRUCTURAL SYMBOLS:

1. SEE SHEET 00G06 FOR KEY TO DRAWING TITLES AND SECTION CUTS, AND FOR DEFINITION OF MATERIALS SHADING PATTERNS.

2. WELDING: SYMBOLS: IN ACCORDANCE WITH AMERICAN WELDING SOCIETY (AWS) A2.4.

STRUCTURAL ABBREVIATIONS:

1. SEE SHEET 00G05 FOR GENERAL LIST OF ABBREVIATIONS USED ON DRAWINGS.

2. ABBREVIATIONS FOR NAMES OF TECHNICAL GROUPS MAY BE FOUND IN THE PROJECT SPECIFICATIONS.

3. STRUCTURAL MEMBERS:

   A. STEEL: ABBREVIATIONS AND DESIGNATIONS ARE IN ACCORDANCE WITH THE AMERICAN INSTITUTE OF STEEL CONSTRUCTION'S STEEL CONSTRUCTION MANUAL, CURRENT EDITION.

   B. ALUMINUM: ABBREVIATIONS AND DESIGNATIONS ARE IN ACCORDANCE WITH THE ALUMINUM ASSOCIATION'S ALUMINUM DESIGN MANUAL, CURRENT EDITION.

4. ABBREVIATIONS FOR STRUCTURAL DRAWINGS:
   WHEN USED ON THE STRUCTURAL DRAWINGS, THE FOLLOWING ABBREVIATIONS HAVE THE MEANINGS LISTED.

REINFORCEMENT:		OTHER:	
BO	BOTTOM OF	L	ANGLE
EF	EACH FACE	PL	PLATE
I.F.	INSIDE FACE		
O.F.	OUTSIDE FACE		
T.O.	TOP OF		
#	NUMBER (REINFORCING BAR SIZE)		

DEFERRED DESIGN SUBMITTALS

AS DEFINED IN THE BUILDING CODE, DEFERRED DESIGN SUBMITTALS ARE PORTIONS OF THE DESIGN THAT ARE NOT SUBMITTED AT THE TIME OF PERMIT APPLICATION, AND THAT ARE TO BE REVIEWED BY THE REGISTERED DESIGN PROFESSIONAL AND SUBSEQUENTLY SUBMITTED TO THE BUILDING OFFICIAL.

DEFERRED DESIGN SUBMITTALS FOR THIS PROJECT INCLUDE:

1. DIVISION 2 SITE CONSTRUCTION (EARTHWORK).

   A. 02300 EARTH WORK
   B. 2665 SOIL NAIL WALL
   C. 02338 EARTH RETAINING WALLS
   D. COFFERDAMS - SECTION 02670

2. DIVISION 4 MASONRY

   A. CONCRETE UNIT MASONRY

3. DIVISION 5 METALS.

   A. 05500 HANDRAILS AND GUARDRAILS.
   B. 05500 GRATING

4. DIVISION 13 SPECIAL CONSTRUCTION.

   A. 13122 METAL BUILDING SYSTEM.

5. DIVISION 15 MECHANICAL.

   A. 15050 MECHANICAL EQUIPMENT ANCHORAGE

6. LIFTING EYES: SUBMIT DETAILS WITH CALCULATIONS DEMONSTRATING THE SPECIFIED LOAD CAPACITY TO ENGINEER. DELIVER REMOVABLE EYES TO OWNER AFTER INSTALLATION OF REMOVABLE PANELS.

REV	DATE	BY	DESCRIPTION
1	11-04-20	KP	REVISED PER ADDENDUM NO. 3

DESIGNED CE
DRAWN CE
CHECKED MD
DATE SEPTEMBER 2020

Digitally signed by Kaushik V. Punyamurtula
Contact Info: Carollo Engineers
Date: 2020.11.04 18:45:15-08'00'

REGISTERED PROFESSIONAL ENGINEER KAUSHIK V. PUNYAMURTULA No. 83261 CIVIL STATE OF CALIFORNIA

carollo

ANTIOCH CALIFORNIA OPPORTUNITY LIVES·HERE

CITY OF ANTIOCH
ANTIOCH BRACKISH WATER DESALINATION PROJECT
GENERAL
GENERAL STRUCTURAL NOTES

VERIFY SCALES
BAR IS ONE INCH ON ORIGINAL DRAWING
0 1"
IF NOT ONE INCH ON THIS SHEET, ADJUST SCALES ACCORDINGLY

JOB NO. 10024A.10
DRAWING NO. G10
SHEET NO. 10 OF 498

Plot Date: 04-NOV-2020 6:35:26 PM
User: svcPW
Model: Layout1 ColorTable: gshade.ctb DesignScript: Carollo_Std_Pen_v0905.pen PlotScale: 1:1
LAST SAVED BY: gleal

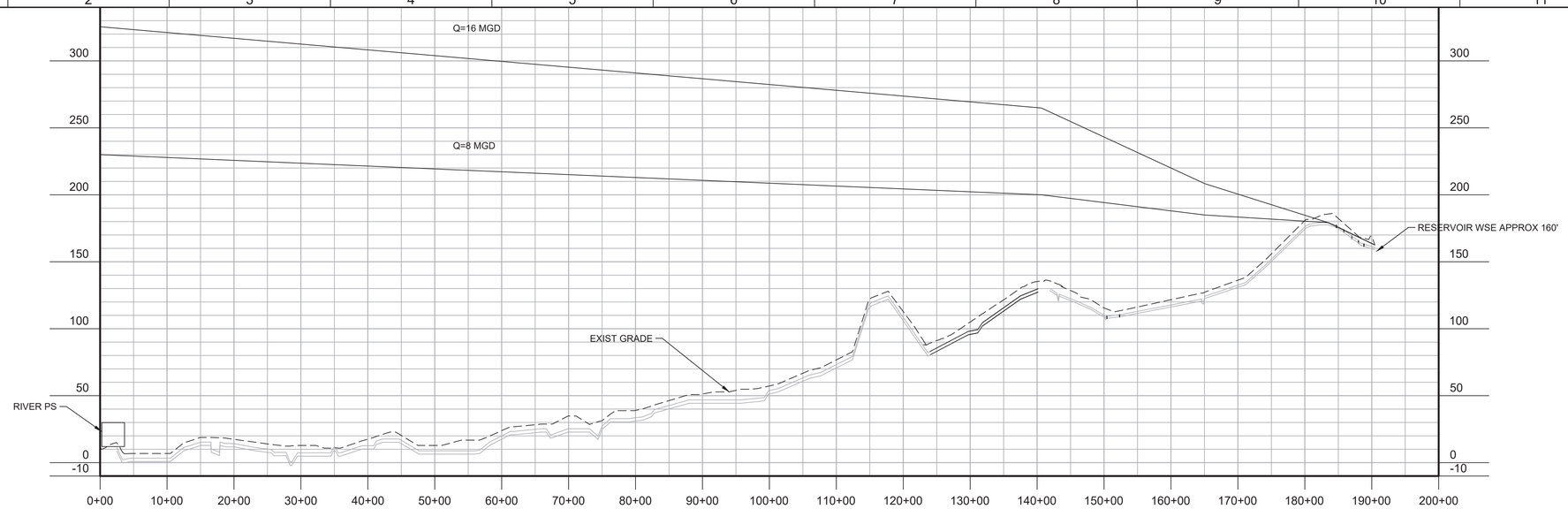

RAW WATER LINE, RPS TO RESERVOIR HYDRAULIC PROFILE

HORIZ SCALE: 1"=1000'
VERT SCALE: 1"=50'
FILE:

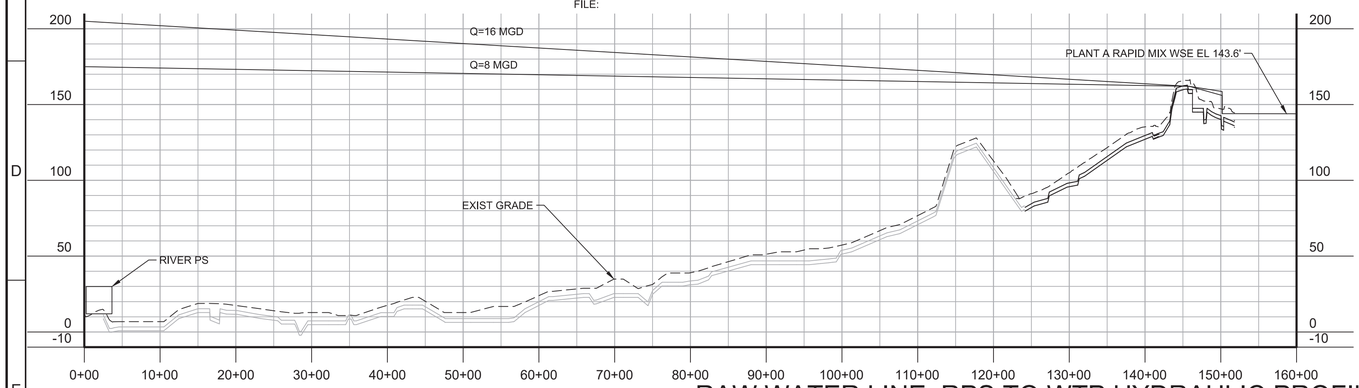

RAW WATER LINE, RPS TO WTP HYDRAULIC PROFILE

HORIZ SCALE: 1"=1000'
VERT SCALE: 1"=50'
FILE:

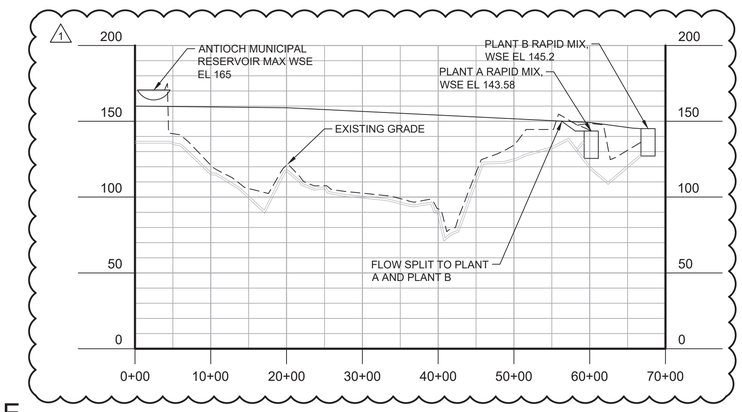

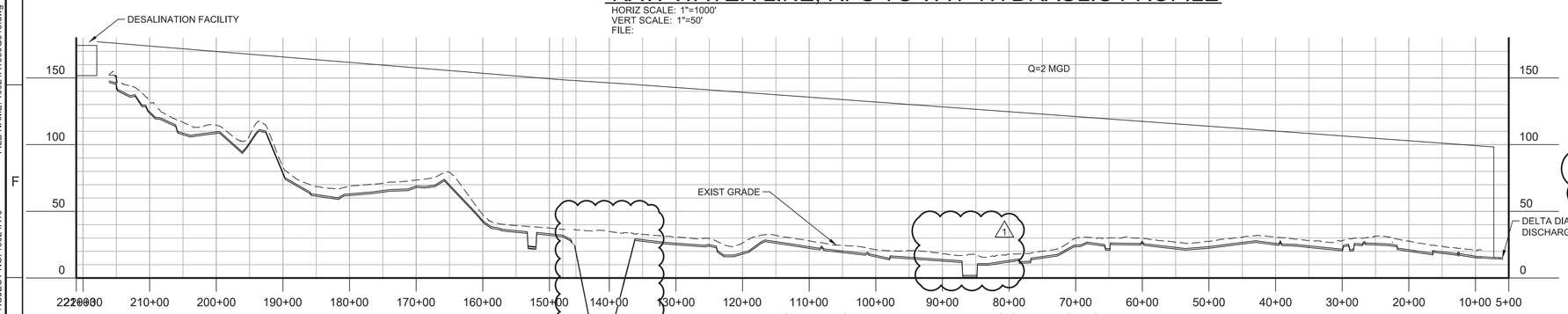

14" BRINE LINE HYDRAULIC PROFILE

HORIZ SCALE: 1"=1000'
VERT SCALE: 1"=50'
FILE:

DESIGN CRITERIA TABLE

	RAW WATER LINE	BRINE LINE
FLOW		
MAXIMUM, MGD	16	2.0
MINIMUM, MGD	2.0	0.5
SIZE		
OUTER DIAMETER, IN.	32	14
INNER DIAMETER, IN.	30.9	12.25
ROUGHNESS		
$C_{INITIAL}$	130	150
C_{FINAL}	130	130
TEST PRESSURE	200 (RPS) 100 (WTP)	85

1

GENERAL NOTES:

1. SEE SHEET G03 FOR GENERAL NOTES AND PIPELINE NOTES.

Call before you Dig
Avoid cutting underground utility lines. It's costly.
Call 811

KEY MAP

SCALE

0 500' 1000' 2000'
HORIZONTAL

0 25' 50' 100'
VERTICAL

REV	DATE	BY	DESCRIPTION
1	11-4-2020	MMB	REVISED PER ADDENDUM #3

DESIGNED JES
DRAWN ART
CHECKED BY
DATE SEPTEMBER 2020

Digitally signed by Scott C. Weddle
Contact Info: Carollo Engineers, Inc.
Date: 2020.11.04 17:12:57-08'00'

REGISTERED PROFESSIONAL ENGINEER SCOTT CLARK WEDDLE No. 49851 CIVIL STATE OF CALIFORNIA

carollo

ANTIOCH CALIFORNIA OPPORTUNITY LIVES·HERE

CITY OF ANTIOCH

ANTIOCH BRACKISH WATER DESALINATION PROJECT

GENERAL

RAW WATER PUMPING AND BRINE DISPOSAL HYDRAULIC PROFILES

VERIFY SCALES
BAR IS ONE INCH ON ORIGINAL DRAWING
0 1"
IF NOT ONE INCH ON THIS SHEET, ADJUST SCALES ACCORDINGLY

JOB NO. 10024A.10
DRAWING NO. G13
SHEET NO. 13 OF 498

Plot Date: 11/4/2020 12:08:02 PM
FILE NAME: 10024A1000G013.dwg
PROJECT NO. 10024A10
LAST SAVED BY: JDiDonato

Plot Date: 11/2/2020 9:32:19 AM

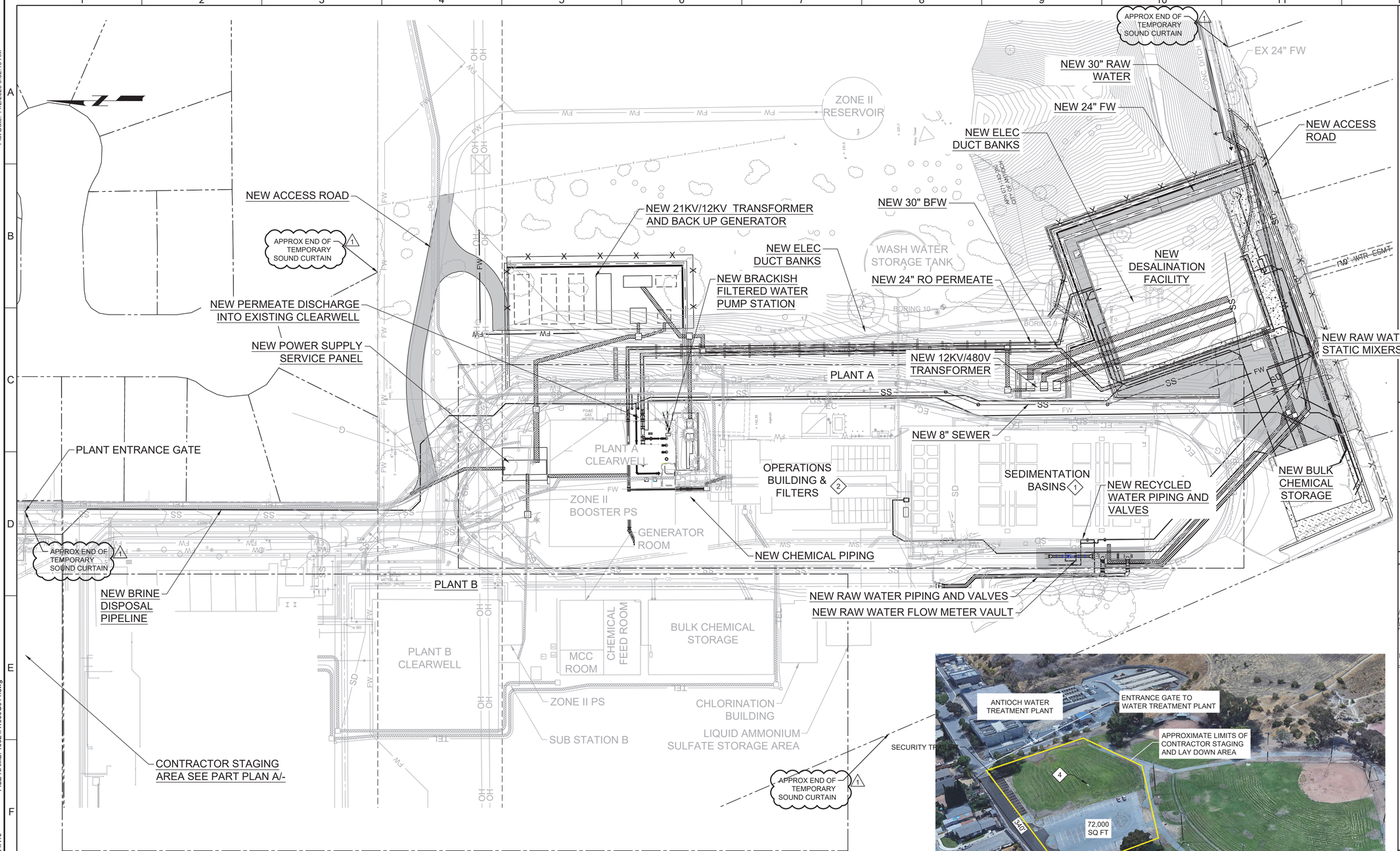

PLAN

SCALE: 1"=40'
FILE: 10024A1000G014

A - PARTIAL PLAN - CONTRACTORS STAGING AREA

SCALE: NOT TO SCALE
FILE: -

GENERAL NOTES:

1. SEE DWG G05 FOR GENERAL NOTES AND PIPELINE NOTES.

KEY NOTES:

1. INTERIOR SURFACES OF SEDIMENTATION BASINS TO BE COATED.
2. EXISTING FILTER MEDIA AND UNDERDRAINS TO BE REPLACED.
3. INSTALL 15' TALL TEMPORARY SOUND CURTAIN APPROX 5 FEET INSIDE PROPERTY FENCE LINE. TO REMAIN IN PLACE DURING CONSTRUCTION PERIOD. INSTALL TO APPROXIMATE LIMITS SHOWN. USE TEMPORARY POSTS AND SUPPORTS DESIGNED BY CONTRACTOR. SOUND CURTAIN SHALL BE ABBC-13EXT AUDIOSEAL® EXTERIOR COMBINATION SOUND BLANKET OR EQUAL.
4. CONTRACTOR MAY CONNECT DOWNSTREAM OF EX BFP FOR TEMP WATER SUPPLY. CONTRACTOR RESPONSIBLE FOR OBTAINING TEMP POWER AND INTERNET.

Call before you Dig
Avoid cutting underground utility lines. It's costly.
Call 811

KEY MAP

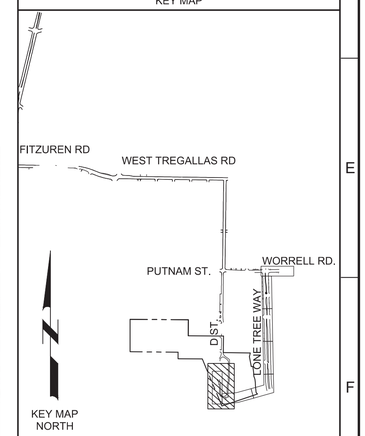

SCALE

0 20' 40' 80'
HORIZONTAL

REV	DATE	BY	DESCRIPTION
1	11-4-2020	MMB	REVISED PER ADDENDUM #3

DESIGNED SW
DRAWN ART
CHECKED BY
DATE SEPTEMBER 2020

Digitally signed by Scott C. Weddle
Contact Info: Carollo Engineers, Inc.
Date: 2020.11.04 17:13:34-08'00'

REGISTERED PROFESSIONAL ENGINEER SCOTT CLARK WEDDLE No. 49851 CIVIL STATE OF CALIFORNIA

carollo

ANTIOCH CALIFORNIA OPPORTUNITY LIVES·HERE

CITY OF ANTIOCH
ANTIOCH BRACKISH WATER DESALINATION PROJECT
GENERAL
OVERALL WATER TREATMENT PLANT SITE PLAN

VERIFY SCALES
BAR IS ONE INCH ON ORIGINAL DRAWING
0 1"
IF NOT ONE INCH ON THIS SHEET, ADJUST SCALES ACCORDINGLY

JOB NO. 10024A.10
DRAWING NO. G14
SHEET NO. 14 OF 498

FILE NAME: 10024A1000G014.dwg
PROJECT NO. 10024A10
LAST SAVED BY: atucker

PROCESS ABBREVIATION CONTAINMENT (CARRIER)	SERVICE	NOMINAL DIAMETER (INCHES)	MATERIAL	PRESSURE CLASS SPECIAL THICKNESS CLASS SCHEDULE WALL THICKNESS	PIPE SPECIFICATION SECTION	JOINTS/ FITTINGS	TEST PRESSURE/TEST	LINING	COATING	NOTES
ALUM	**ALUM**									
P1(T4)	ABOVEGROUND	3(1/2)	PVC(PFA)	SCH 80 (MIN WALL THICKNESS OF PFA=.062")	15265 – PLASTIC PIPING AND TUBING	SW	188 PSIG/HH	NONE	WAE	NOTE 1
P1(T4)	BELOWGROUND	3(1/2)	PVC(PFA)	SCH 80 (MIN WALL THICKNESS OF PFA=.062")	15265 – PLASTIC PIPING AND TUBING	SW	188 PSIG/HH	NONE	NONE	NOTE 1
BFW	**BRACKISH FILTER WATER**									
S5	ABOVEGROUND	12,16	TYPE 316L SST	SCH 10S	15286 - STAINLESS STEEL PIPE	SHOP WLD OR FL, FL WHERE	100 PSIG/HH	NONE	NONE	
S4	ABOVEGROUND	30	TYPE 316L SST	SCH 40S	15286 - STAINLESS STEEL PIPE	SHOP WLD OR FL OR GE, FL	80 PSIG/HH	NONE	NONE	GE SHALL BE 316SST
S4	BELOWGROUND UNDER RO BLDG	30	TYPE 316L SST	SCH 40S	15286 - STAINLESS STEEL PIPE	SHOP WLD OR FL, FL WHERE	100 PSIG/HH	NONE	RP-6 TAPE WRAP	
HDPE	BELOWGROUND (OUTSIDE)	12-34	HDPE	DR17	15241 – HIGH DENSITY POLYEHTYLENE (HDPE) PIPE: AWWA C906	FUSION WLD	100 PSIG/HH	NONE	NONE	
P1	ABOVEGROUND (OUTSIDE)	12	PVC	SCH 80	15265 – PLASTIC PIPING AND TUBING	SW	100 PSIG/HH	NONE	WAE	
BRN, BRINE	**BRINE (RO CONCENTRATE)**									
S3	ABOVEGROUND (INSIDE)	8	DUPLEX 2205 SST	SCH 80S	15286 - STAINLESS STEEL PIPE	SHOP WLD OR FL, FL WHERE SHOWN	100 PSIG/HH	NONE	NONE	NOTE 8
S5	ABOVEGROUND (INSIDE)	12	TYPE 316L SST	SCH 10S	15286 - STAINLESS STEEL PIPE	SHOP WLD OR FL, FL WHERE SHOWN	100 PSIG/HH	NONE	NONE	NOTE 8
S5	ABOVEGROUND (OUTSIDE AT BFW PS)	12	DUPLEX 2205 SST	SCH 80S	15286 - STAINLESS STEEL PIPE	SHOP WLD OR FL, FL WHERE SHOWN	100 PSIG/HH	NONE	NONE	NOTE 8
P1	ABOVEGROUND	6-14	PVC	SCH 80	15265 – PLASTIC PIPING AND TUBING	SW	85 PSIG/HH	NONE	WAE	NOTE 8
HDPE	BELOWGROUND	14	HDPE	DR17	15241 – HIGH DENSITY POLYETHYLENE (HDPE) PIPE: AWWA C906	FUSION WLD	85 PSIG/HH	NONE	NONE	NOTE 8
CC	**CALCIUM CHLORIDE**									
P1	ABOVEGROUND	1/2-2	PVC	SCH 80	15265 – PLASTIC PIPING AND TUBING	SW	125 PSIG/HH	NONE	WAE	NOTE 1
P1(T4)	BELOWGROUND	3(1/2)	PVC(PFA)	SCH 80 (MIN WALL THICKNESS OF PFA=.062")	15265 – PLASTIC PIPING AND TUBING	SW FOR PVC. COMPRESSION	125 PSIG/HH	NONE	NONE	NOTE 1
CD	**CHEMICAL DRAIN**									
P1	ABOVEGROUND	1-6	PVC	SCH 80	15265 – PLASTIC PIPING AND TUBING	SW	GR	NONE	WAE	
P1	BELOWGROUND	1-6	PVC	SCH 80	15265 – PLASTIC PIPING AND TUBING	SW	GR	NONE	NONE	
CIPF	**CLEAN IN PLACE FEED**									
P1	ABOVEGROUND	2-10	PVC	SCH 80	15265 – PLASTIC PIPING AND TUBING	SW	150 PSIG/HH	NONE	WAE	
S5	ABOVEGROUND	8-10	TYPE 316L SST	SCH 10S	15286 - STAINLESS STEEL PIPE	SHOP WLD OR FL, FL WHERE SHOWN	100 PSIG/HH	NONE	NONE	
CIPR	**CLEAN IN PLACE RETURN**									
P1	ABOVEGROUND	4-10	PVC	SCH 80	15265 – PLASTIC PIPING AND TUBING	SW	150 PSIG/HH	NONE	WAE	
CIPW	**CLEAN IN PLACE WASTE**									
P1	ABOVEGROUND	2-6	PVC	SCH 80	15265 – PLASTIC PIPING AND TUBING	SW	GR	NONE	WAE	
P1	BELOWGROUND	2-6	PVC	SCH 80	15265 – PLASTIC PIPING AND TUBING	SW	150 PSIG/HH	NONE	WAE	
DR	**DRAIN- EQUIPMENT**									
S9	ABOVEGROUND	2	SSTL(SSTL)	SCH 80, ALLOY 20	15286 - STAINLESS STEEL PIPE	SCRD	188 PSIG/HH	NONE	NONE	NOTE 1
T4	ABOVEGROUND	0.375	PFA	MIN WALL THICKNESS OF PFA=.062"	15265 – PLASTIC PIPING AND TUBING	PFA FLARE FITTINGS				
P1	ABOVEGROUND	1/2-4	PVC	SCH 80	15265 – PLASTIC PIPING AND TUBING	SW	15 FEET/GR	NONE	WAE	
P1	BELOWGROUND	4-6	PVC	SCH 80	15265 – PLASTIC PIPING AND TUBING	SW	15 FEET/GR	NONE	NONE	
FW	**FILTERED WATER**									
CIPP	BELOWGROUND (REHABILITATION)	12	CIPP	CL 150	02700 - CURED IN PLACE PIPE REHABILITATION (PRESSURE)	FUSION WLD	100 PSIG/HH	NONE	NONE	NOTE 3
STL	BELOWGROUND	12	STL	MIN WALL THICKNESS=0.25"	15278 - STEEL PIPE - PLANT	WLD	100 PSIG/HH	CM	CMC	NOTE 3
DI	ABOVEGROUND	24	DIP	CL53	15211 - DUCTILE IRON PIPE: AWWA C151	FL	100 PSIG/HH	CM	EPU	NOTE 3
DI	BELOWGROUND	6,24	DIP	CL 250	15211 - DUCTILE IRON PIPE: AWWA C151	INTEGRALLY RPO, FL OR RMJ WHERE SHOWN	100 PSIG/HH	CM	2 LAYERS OF PEE	NOTE 3
HFS	**HYDROFLUOROSILICIC ACID**									
T4	ABOVEGROUND	3(1/2)	PVC(PFA)	SCH 80 (MIN WALL THICKNESS OF PFA=.062")	15265 – PLASTIC PIPING AND TUBING	SW	188 PSIG/HH	NONE	WAE	NOTE 1
P1(T4)	BELOWGROUND	3(1/2)	PVC(PFA)	SCH 80 (MIN WALL THICKNESS OF PFA=.062")	15265 – PLASTIC PIPING AND TUBING	SW	188 PSIG/HH	NONE	NONE	NOTE 1
HW	**POTABLE HOT WATER**									
P2	ABOVEGROUND	3" AND LESS	PVC	SCH 40	15265 – PLASTIC PIPING AND TUBING	SW	100 PSIG/HH	NONE	NONE	NOTE 4
IRR	**IRRIGATION WATER (MUNICIPAL)**									
P2	ABOVEGROUND	ALL	PVC	SCH 40	15265 – PLASTIC PIPING AND TUBING	RPO	150 PSIG/HH	NONE	NONE	
P2	BELOWGROUND	ALL	PVC	SCH 40	15265 – PLASTIC PIPING AND TUBING	RPO	150 PSIG/HH	NONE	NONE	
HOCL	**SODIUM HYPOCHLORITE**									
T4	ABOVEGROUND	3(1/2)	PVC(PFA)	SCH 80 (MIN WALL THICKNESS OF PFA=.062")	15265 – PLASTIC PIPING AND TUBING	SW	188 PSIG/HH	NONE	WAE	NOTE 1
P1(T4)	BELOWGROUND	3(1/2)	PVC(PFA)	SCH 80 (MIN WALL THICKNESS OF PFA=.062")	15265 – PLASTIC PIPING AND TUBING	SW	188 PSIG/HH	NONE	NONE	NOTE 1
LAS	**LIQUID AMMONIUM SULFATE**									
T4	ABOVEGROUND	3(1/2)	PVC(PFA)	SCH 80 (MIN WALL THICKNESS OF PFA=.062")	15265 – PLASTIC PIPING AND TUBING	SW	188 PSIG/HH	NONE	WAE	NOTE 1
P1(T4)	BELOWGROUND	3(1/2)	PVC(PFA)	SCH 80 (MIN WALL THICKNESS OF PFA=.062")	15265 – PLASTIC PIPING AND TUBING	SW	188 PSIG/HH	NONE	NONE	NOTE 1
NAOH	**SODIUM HYDROXIDE**									
T4	ABOVEGROUND	3(1/2)	PVC(PFA)	SCH 80 (MIN WALL THICKNESS OF PFA=.062")	15265 – PLASTIC PIPING AND TUBING	SW	188 PSIG/HH	NONE	WAE	NOTE 1, NOTE 4 (OUTSIDE PIPING)
P1(T4)	BELOWGROUND	3(1/2)	PVC(PFA)	SCH 80 (MIN WALL THICKNESS OF PFA=.062")	15265 – PLASTIC PIPING AND TUBING	SW	188 PSIG/HH	NONE	NONE	NOTE 1
OF	**OVERFLOW**									
S9	ABOVEGROUND	2-3	SSTL(SSTL)	SCH 80, ALLOY 20	15286 - STAINLESS STEEL PIPE	SCRD	188 PSIG/HH	NONE	NONE	NOTE 1
P1	ABOVEGROUND	3-10	PVC	SCH 80	15265 – PLASTIC PIPING AND TUBING	SW	GR	NONE	WAE	
PA	**PLANT AIR**									
S5	ABOVEGROUND	1, 6	TYPE 304L SST	SCH 10S	15286 - STAINLESS STEEL PIPE	SCRD	200 PSIG/AM	NONE	NONE	
S5	BELOWGROUND	1, 6	TYPE 304L SST	SCH 10S	15286 - STAINLESS STEEL PIPE	SCRD	125 PSIG/AM	NONE	NONE	
S4	ABOVEGROUND AND IN RIVER	3-48	TYPE 316L SST	SCH 40S	15286 - STAINLESS STEEL PIPE	SHOP WLD OR FL, FL WHERE SHOWN	225 PSIG/HH	NONE	NONE	
S4	BELOWGROUND	3-6	TYPE 316L SST	SCH 40S	15286 - STAINLESS STEEL PIPE	SHOP WLD OR FL, FL WHERE	225 PSIG/HH	NONE	RP-6 TAPE WRAP	
PA1	**PLANT AIR TYPE 1 (INSTRUMENT QUALITY)**									
S4	ABOVEGROUND	0.25-0.5	TYPE 316L SST	SCH 40S	15286 - STAINLESS STEEL PIPE	SHOP WLD OR FL, FL WHERE SHOWN	225 PSIG/HH	NONE	RP-6 TAPE WRAP SYSTEM	
PD	**PERMEATE TO DRAIN**									
S5	ABOVEGROUND	4-14	TYPE 316L SST	SCH 10S	15286 - STAINLESS STEEL PIPE	SHOP WLD OR FL, FL WHERE	15 FEET/GR	NONE	NONE	
S5	BELOWGROUND	4-14	TYPE 316L SST	SCH 10S	15286 - STAINLESS STEEL PIPE	SHOP WLD OR FL, FL WHERE	15 FEET/GR	NONE	NONE	
POL. PEN. PEA	**POLYMER**									
P1	ABOVEGROUND	1/2-2	PVC	SCH 80	15265 - PLASTIC PIPING AND TUBING	SW	125 PSIG/HH	NONE	WAE	
P1(T4)	BELOWGROUND	3(1/2)	PVC(PFA)	SCH 80 (MIN WALL THICKNESS OF PFA=.062")	15265 - PLASTIC PIPING AND TUBING	SW FOR PVC. COMPRESSION FITTINGS FOR PFA.	125 PSIG/HH	NONE	WAE ON PVC	NOTES 1
RAW-W	**RAW WATER**									
S3	IN RIVER	42	TYPE 304 SST	SCH 40S	15286 - STAINLESS STEEL PIPE	SHOP WLD OR FL, FL WHERE SHOWN	20 PSIG/LH	NONE	NONE	
DI	ABOVEGROUND	18-30	DIP	CL53	15211 - DUCTILE IRON PIPE: AWWA C151	FL	200 PSIG/HH AT RPS; 100 PSIG/HH AT WTP & IN LONE TREE WAY	CM	EPU	
DI	BELOWGROUND	18-54	DIP	CL 250	15211 - DUCTILE IRON PIPE: AWWA C151	INTEGRALLY RPO , FL WHERE SHOWN	200 PSIG/HH AT RPS; 100 PSIG/HH AT WTP & IN LONE TREE WAY	CM	2 LAYERS PEE	
DI	IN RIVER	42	DIP	CL250	15211 - DUCTILE IRON PIPE: AWWA C151	INTEGRALLY RPO , FL WHERE SHOWN	20 PSIG/LH	CM	2 LAYERS PEE	
STL	BELOWGROUND (WTP WHERE INDICATED)	18	STL	MIN WALL THICKNESS=0.25"	15278 – STEEL PIPE	WELDED	75 PSIG/HH	CM	CMC	
STL	BELOWGROUND (WTP WHERE INDICATED)	30-42	STL	MIN WALL THICKNESS=0.6"	15278 – STEEL PIPE	WELDED	75 PSIG/HH	CM	CMC	
ROF	**REVERSE OSMOSIS FEED**									
S5	ABOVEGROUND	6-16	TYPE 316L SST	SCH 10S	15286 - STAINLESS STEEL PIPE	SHOP WLD OR FL, FL WHERE SHOWN	135 PSIG/HH	NONE	NONE	

REV	DATE	BY	DESCRIPTION
1	11-04-20	JES	REVISED PER ADDENDUM NO. 3

DESIGNED JES
DRAWN GL
CHECKED JM
DATE SEPTEMBER 2020

Digitally signed by Scott C. Weddle
Contact Info: Carollo Engineers, Inc.
Date: 2020.11.04 17:13:57-08'00'

REGISTERED PROFESSIONAL ENGINEER SCOTT CLARK WEDDLE No. 49851 CIVIL STATE OF CALIFORNIA

carollo®

ANTIOCH CALIFORNIA OPPORTUNITY LIVES·HERE

CITY OF ANTIOCH
ANTIOCH BRACKISH WATER DESALINATION PROJECT
GENERAL
PIPE SCHEDULE - 1

VERIFY SCALES
BAR IS ONE INCH ON ORIGINAL DRAWING
0 1"
IF NOT ONE INCH ON THIS SHEET, ADJUST SCALES ACCORDINGLY

JOB NO. 10024A.10
DRAWING NO. G18
SHEET NO. 18 OF 498

PROJECT NO. 10024A10 FILE NAME: 10024A1000G018.dgn

LAST SAVED BY: gleal
Model: Layout1 ColorTable: gshade.ctb DesignScript: Carollo_Std_Pen_v0905.pen PlotScale: 1:1
User: svcPW Plot Date: 04-NOV-2020 11:25:36 AM

(CONTINUED)

PROCESS ABBREVIATION CONTAINMENT (CARRIER)	SERVICE	NOMINAL DIAMETER (INCHES)	MATERIAL	PRESSURE CLASS SPECIAL THICKNESS CLASS SCHEDULE WALL THICKNESS	PIPE SPECIFICATION SECTION	JOINTS/ FITTINGS	TEST PRESSURE/TEST	LINING	COATING	NOTES
S5	BELOWGROUND	6-30	TYPE 316L SST	SCH 40S	15286 - STAINLESS STEEL PIPE	SHOP WLD OR FL, FL WHERE SHOWN	135 PSIG/HH	NONE	RP-6 TAPE WRAP SYSTEM	
S4	ABOVEGROUND	8	TYPE 316L SST	SCH 40S	15286 - STAINLESS STEEL PIPE	SHOP WLD OR FL, FL WHERE SHOWN	615 PSIG/HH	NONE	NONE	
S4	ABOVEGROUND	30	TYPE 316L SST	SCH 40S	15286 - STAINLESS STEEL PIPE	SHOP WLD OR FL, FL WHERE SHOWN	135 PSIG/HH	NONE	NONE	
S4	BELOWGROUND	6-30	TYPE 316L SST	SCH 40S	15286 - STAINLESS STEEL PIPE	SHOP WLD OR FL, FL WHERE SHOWN	135 PSIG/HH	NONE	RP-6 TAPE WRAP SYSTEM	
ROFD	**REVERSE OSMOSIS FEED DRAIN**									
S5	ABOVEGROUND	6-10	TYPE 316L SST	SCH 10S	15286 - STAINLESS STEEL PIPE	SHOP WLD OR FL, FL WHERE SHOWN	100 PSIG/HH	NONE	NONE	
S5	BELOWGROUND	6-10	TYPE 316L SST	SCH 10S	15286 - STAINLESS STEEL PIPE	SHOP WLD OR FL, FL WHERE SHOWN	100 PSIG/HH	NONE	NONE	
ROFF	**REVERSE OSMOSIS FLUSH FEED**									
P1	ABOVEGROUND	4-8	PVC	SCH 80	15265 – PLASTIC PIPING AND TUBING	SW	GR	NONE	WAE	
S5	ABOVEGROUND	6-10	TYPE 316L SST	SCH 10S	15286 - STAINLESS STEEL PIPE	SHOP WLD OR FL, FL WHERE SHOWN	100 PSIG/HH	NONE	NONE	
S5	BELOWGROUND	6-10	TYPE 316L SST	SCH 10S	15286 - STAINLESS STEEL PIPE	SHOP WLD OR FL, FL WHERE SHOWN	100 PSIG/HH	NONE	NONE	
ROFW	**REVERSE OSMOSIS FLUSH WASTE**									
S5	BELOWGROUND	6	TYPE 316L SST	SCH 10S	15286 - STAINLESS STEEL PIPE	SHOP WLD OR FL, FL WHERE SHOWN	100 PSIG/HH	NONE	NONE	
ROI	**REVERSE OSMOSIS INTERSTAGE**									
S7	ABOVEGROUND	8	DUPLEX 2205 SST	SCH 40S	15286 - STAINLESS STEEL PIPE	SHOP WLD OR GROOVED ENDS WITH 316 SST GROOVED COUPLING WITH 316 SST BOLTS WITH SILICON BRONZE NUTS, OR 300-LB FLANGES	615 PSIG/HH	NONE	NONE	
S8	ABOVEGROUND	6	DUPLEX 2205 SST	SCH 80S	15286 - STAINLESS STEEL PIPE	SHOP WLD OR GROOVED ENDS WITH 316 SST GROOVED COUPLING WITH 316 SST BOLTS WITH SILICON BRONZE NUTS, OR 300-LB FLANGES	1120 PSIG/HH	NONE	NONE	
ROP	**REVERSE OSMOSIS PERMEATE**									
P1	ABOVEGROUND	6-10	PVC	SCH 80S	15265 – PLASTIC PIPING AND TUBING	SW	15 PSIG/LH	NONE	NONE	
S5	ABOVEGROUND	18-24	TYPE 316L SST	SCH 10S	15286 - STAINLESS STEEL PIPE	SHOP WLD OR FL OR GE, FL WHERE SHOWN	15 PSIG/LH	NONE	NONE	GE SHALL BE 316SST VICTAULIC 233S OR EQUAL
HDPE	BELOWGROUND	28	HDPE	DR17	15241 – HIGH DENSITY POLYETHYLENE (HDPE) PIPE; AWWA C906	FUSION WLD	15 PSIG/LH	NONE	NONE	
RW	**RECYCLED WATER**									
STL	ABOVEGROUND	12	STL	MIN WALL THICKNESS=0.25"	15278 - STEEL PIPE - PLANT	FL	30 PSIG/HH	CM	EPU	
STL	BELOWGROUND	12	STL	MIN WALL THICKNESS=0.25"	15278 - STEEL PIPE - PLANT	WELDED	30 PSIG/HH	CM	CMC	
SA	**SAMPLE LINE**									
S9	ABOVEGROUND	2	SSTL	SCH 80, ALLOY 20	15286 - STAINLESS STEEL PIPE	SCRD	188 PSIG/HH	NONE	NONE	NOTE 1
T5	ABOVEGROUND	0.25 - 0.5	316 SSTL	MIN WALL THICKNESS=0.035"	15286 - STAINLESS STEEL PIPE	SWAGE FERRULE DESIGN	1000 PSIG/HH	NONE	NONE	
T4	ABOVEGROUND	0.375	PFA	MIN WALL THICKNESS=.062"	15265 – PLASTIC PIPING AND TUBING	COMPRESSION FITTINGS	188 PSIG/HH	NONE	NONE	
P1	ABOVEGROUND	0.5 - 2	PVC	SCH 80	15265 – PLASTIC PIPING AND TUBING	SW	50 PSIG/HH	NONE	WAE	NOTE 4 (OUTSIDE PIPING)
P1	BELOWGROUND	2	PVC	SCH 80	15265 – PLASTIC PIPING AND TUBING	SW	50 PSIG/HH	NONE	NONE	
T2	ABOVEGROUND	0.25	PE	MIN WALL THICKNESS=0.040"	15265 – PLASTIC PIPING AND TUBING	COMPRESSION FITTINGS	50 PSIG/HH	NONE	NONE	
SBS	**SODIUM BISULFITE**									
T4	ABOVEGROUND	3(1/2)	PVC(PFA)	SCH 80 (MIN WALL THICKNESS OF PFA=.062")	15265 - PLASTIC PIPING AND TUBING	COMPRESSION FITTINGS FOR PFA.	188 PSIG/HH	NONE	WAE	NOTES 1, 4
P1	ABOVEGROUND	2 – 3	PVC	SCH 80	15265 – PLASTIC PIPING AND TUBING	SW	125 PSIG/HH	NONE	WAE	NOTE 4
P1(T4)	BELOWGROUND	3(1/2)	PVC(PFA)	SCH 80 (MIN WALL THICKNESS OF PFA=.062")	15265 – PLASTIC PIPING AND TUBING	SW FOR PVC. COMPRESSION FITTINGS FOR PFA.	125 PSIG/HH	NONE	NONE	NOTES 1, 6
SD	**STORM DRAIN**									
P1	BELOWGROUND	4-12	PVC	ASTM D3034, SDR 26	15265 – PLASTIC PIPING AND TUBING	B&S	15 FEET /GR	NONE	NONE	
P1	BELOWGROUND	18	PVC	ASTM 679, PS115	15265 – PLASTIC PIPING AND TUBING	B&S	15 FEET /GR	NONE	NONE	
SFA	**SULFURIC ACID**									
S9	ABOVEGROUND	½-2	SSTL	SCH 80, ALLOY 20	15286 - STAINLESS STEEL PIPE	WELDED FOR SIZES 1-INCH AND ABOVE, WELDED OR COMPRESSION FITTINGS FOR 1/2-INCH SIZE.	145 PSIG/HH	NONE	NONE	NOTE 1
P1(T4)	BELOWGROUND	3(1/2)	PVC(PFA)	SCH 80 (MIN WALL THICKNESS OF PFA=.062")	15265 - PLASTIC PIPING AND TUBING	SW FOR PVC. COMPRESSION FITTINGS FOR PFA.	145 PSIG/HH	NONE	NONE	NOTE 1
S9	BELOWGROUND	2	SSTL	SCH 80, ALLOY 20	15286 - STAINLESS STEEL PIPE	WELDED	188 PSIG/HH	NONE	NONE	NOTE 1
SI	**SCALE INHIBITOR**									
T4	ABOVEGROUND	1/2-1	PFA	MIN WALL THICKNESS OF PFA=.062"	15265 - PLASTIC PIPING AND TUBING	COMPRESSION FITTINGS FOR PFA.	188 PSIG/HH	NONE	WAE	NOTE 1, NOTE 4 (OUTSIDE PIPING)
P1	ABOVEGROUND	1/2	PVC	SCH 80	15265 – PLASTIC PIPING AND TUBING	SW	125 PSIG/HH	NONE	WAE	NOTE 4 (OUTSIDE PIPING)
P1(T4)	BELOWGROUND	3(1/2)	PVC (PFA)	SCH 80 (MIN WALL THICKNESS OF PFA=.062")	15265 – PLASTIC PIPING AND TUBING	SW FOR PVC. COMPRESSION FITTINGS FOR PFA.	125 PSIG/HH	NONE	NONE	NOTE 1
SS	**SANITARY SEWER**									
P1	ABOVEGROUND	2-4	PVC	SCH 80	15265 – PLASTIC PIPING AND TUBING	SW	15 FEET/GR	NONE	WAE	
P1	BELOWGROUND	2-8	PVC	SCH 80	15265 – PLASTIC PIPING AND TUBING	SW	15 FEET/GR	NONE	NONE	NOTE 7
HDPE	BELOWGROUND	8	HDPE	DR17	15241 – HIGH DENSITY POLYETHYLENE (HDPE) PIPE; AWWA C906	FUSION WLD	50 PSIG/HH	NONE	NONE	NOTE 7
SWR	**SEAL WATER**									
CU	BELOWGROUND	2	CU	TYPE K	15281 - COPPER WATER TUBE-SEAMLESS, ASTM B88	SOLDER	100 PSIG /HH	NONE	NONE	
TW	**TEMPERED WATER**									
CU	ABOVEGROUND	1/2 - 3	CU	TYPE L	15400- PLUMBING SYSTEMS	SOLDER	100 PSIG/HH	NONE	NONE	NOTES 3,4
CU	BELOWGROUND	1/2 - 3	CU	TYPE K	15400- PLUMBING SYSTEMS	SOLDER	100 PSIG/HH	NONE	NONE	NOTE 3
UW2	**UTILITY WATER 2 (NON-POTABLE)**									
P1	ABOVEGROUND	4	PVC	SCH 80	15265 – PLASTIC PIPING AND TUBING	SW	100 PSIG/HH	NONE	WAE	
P2	ABOVEGROUND	2	PVC	SCH 40	15265 – PLASTIC PIPING AND TUBING	SW	100 PSIG/HH	NONE	WAE	
P2	BELOWGROUND	1-4	PVC	SCH 40	15265 – PLASTIC PIPING AND TUBING	SW	100 PSIG/HH	NONE	NONE	
V, VNT	**VENT**									
P1	ABOVEGROUND	1-10	PVC	SCH 80	15265 – PLASTIC PIPING AND TUBING	SW	10 PSIG /AM	NONE	NONE	
S9	ABOVEGROUND	1-4	SSTL(SSTL)	SCH 80, ALLOY 20	15286 - STAINLESS STEEL PIPE	SCRD	188 PSIG/HH	NONE	NONE	NOTE 1
T4	ABOVEGROUND	1/4-1/2	PFA	MIN WALL THICKNESS=0.062"	15265 – PLASTIC PIPING AND TUBING	COMPRESSION FITTINGS				
W or PW	**POTABLE WATER**									
CU	ABOVEGROUND	3/4-2	CU	TYPE L	15281 - COPPER WATER TUBE-SEAMLESS, ASTM B88	SOLDER	100 PSIG/HH	NONE	NONE	NOTE 3
CU	BELOWGROUND	3/4-2	CU	TYPE K	15281 - COPPER WATER TUBE-SEAMLESS, ASTM B88	SOLDER	100 PSIG/HH	NONE	NONE	NOTE 3
P3	BELOWGROUND	4 – 12	PVC	C900, CL 150	15265 – PLASTIC PIPING AND TUBING	RPO	100 PSIG/HH	NONE	NONE	NOTE 3

GENERAL NOTES:

A ALL BURIED PIPING UNDER CONCRETE SLABS AND/OR STRUCTURES SHALL BE CONCRETE ENCASED.
B ALL BURIED PIPING 2-INCH AND LARGER SHALL HAVE UNDERGROUND WARNING TAPE PER SECTION 15076.
C ALL NON-METALLIC PIPE 2-INCH AND LARGER SHALL HAVE A TRACER WIRE PER SECTION 15076.

NOTES:

1. PROVIDE ENGINEERED SECONDARY CONTAINMENT PIPING SYSTEM THAT CONSISTS OF CARRIER PIPING AND CONTAINMENT PIPING AND IN ACCORDANCE WITH SECTION 15265. TRANSITION TO STAINLESS STEEL TUBING AT CHEMICAL INJECTON LOCATIONS PER MECHANICAL DETAILS.
2. ALL FERROUS METAL PIPE, JOINTS, FLANGES, VALVES, FITTINGS, AND OTHER PIPE SYSTEM COMPONENTS SHALL BE WRAPPED WITH WAX TAPE PER SECTION 09997.
3. FLUSH AND DISINFECT POTABLE WATER PIPING AS SPECIFIED IN SECTION 01757.
4. PROVIDE INSULATED PIPE PER SECTION 15400.
5. PROVIDE FLANGED ENDS AT CONNECTIONS TO EQUIPMENT, VALVES, AND ELSEWHERE WHERE FLANGES ARE REQUIRED.
6. INSULTATED PIPE IS NOT REQUIRED FOR SBS PIPING BELOW GROUND.
7. 8" SS IS HDPE EXCEPT FOR SEGMENT UNDER RO BUILDING.
8. ALL BRINE PIPELINE NON-HDPE FITTINGS AND APPURTENANCES SHALL BE CORROSION RESISTANT TO BRINE.

ABBREVIATIONS:

1. THE FOLLOWING ABBREVIATIONS USED IN THE COLUMN OF TEST METHOD REFER TO THE RESPECTIVE METHODS AS SPECIFIED IN SECTION 15956 - PIPING SYSTEMS TESTING.

- AM AIR METHOD
- GR GRAVITY METHOD
- HH HIGH HEAD METHOD
- LH LOW HEAD METHOD
- SC SPECIAL CASE

2. ABBREVIATIONS TO DESIGNATE PIPING INCLUDE THE FOLLOWING:

- CU COPPER PER SECTION 15281 (CU)
- DIP DUCTILE IRON PIPING PER SECTION 15211 (DI)
- HDPE HIGH DENSITY POLYETHYLENE PER SECTION 15241 (HDPE1)
- PE POLYETHYLENE PER SECTION 15265 (T2)
- PFA PERFLUOROALKOXY PER SECTION 15265 (T4)
- PVC POLYVINYL CHLORIDE PER SECTION 15265 (P1, P2, P3)
- SST STAINLESS STEEL PER SECTION 15286 (T5, S3, S4, S5, S7, S8, S9)
- STL STEEL PER SECTION 15278 (STL)

3. ABBREVIATIONS TO DESIGNATE PIPE LINING INCLUDE THE FOLLOWING:

- CM CEMENT MORTAR PER SECTION 09997

4. ABBREVIATIONS TO DESIGNATE PIPE COATING INCLUDE THE FOLLOWING:

- CM CEMENT MORTAR PER SECTION 09997
- EPU HIGH SOLIDS EPOXY AND POLYURETHANE SYSTEM PER SECTION 09960
- PEE POLYETHYLENE ENCASEMENT PER SECTION 09997
- WAE WATERBORNE ACRYLIC EMULSION PER SECTION 09960
- WT WAX TAPE PER SECTION 09997

5. ABBREVIATIONS TO DESIGNATE PIPE JOINTS/FITTINGS INCLUDE THE FOLLOWING:

- B&S BELL AND SPIGOT
- BF BUTT FUSION
- FL FLANGE
- GE GROOVED END JOINT
- MJ MECHANICAL JOINT
- RMJ RESTRAINED MECHANICAL JOINT
- RPO RESTRAINED PUSH-ON
- SCRD SCREWED-ON
- SF SPOT-FACED
- SW SOLVENT WELDED
- SWD SOCKET WELD
- WLD WELD

6. OTHER ABBREVIATIONS:

- CL CLASS, FOLLOWED BY THE DESIGNATION
- GA GAUGE, PRECEDED BY THE DESIGNATION
- NPS NOMINAL PIPE SIZE, FOLLOWED BY THE NUMBER IN INCHES
- PSI POUNDS PER SQUARE INCH
- PSIG POUNDS PER SQUARE INCH GAUGE
- SCH SCHEDULE, FOLLOWED BY THE DESIGNATION

REV	DATE	BY	DESCRIPTION
1	11-04-20	JES	REVISED PER ADDENDUM NO. 3

DESIGNED JES
DRAWN GL
CHECKED JM
DATE SEPTEMBER 2020

Digitally signed by Scott C. Weddle
Contact Info: Carollo Engineers, Inc.
Date: 2020.11.04 17:14:19-08'00'

REGISTERED PROFESSIONAL ENGINEER SCOTT CLARK WEDDLE No. 49851 CIVIL STATE OF CALIFORNIA

carollo®

ANTIOCH CALIFORNIA OPPORTUNITY LIVES·HERE

CITY OF ANTIOCH
ANTIOCH BRACKISH WATER DESALINATION PROJECT
GENERAL
PIPE SCHEDULE - 2

VERIFY SCALES
BAR IS ONE INCH ON ORIGINAL DRAWING
0 1"
IF NOT ONE INCH ON THIS SHEET, ADJUST SCALES ACCORDINGLY

JOB NO. 10024A.10
DRAWING NO. G19
SHEET NO. 19 OF 498

Plot Date: 04-NOV-2020 11:22:01 AM
User: svcPW
PlotScale: 1:1
DesignScript: Carollo_Std_Pen_v0905.pen
ColorTable: gshade.ctb
Model: Layout1
LAST SAVED BY: gleal

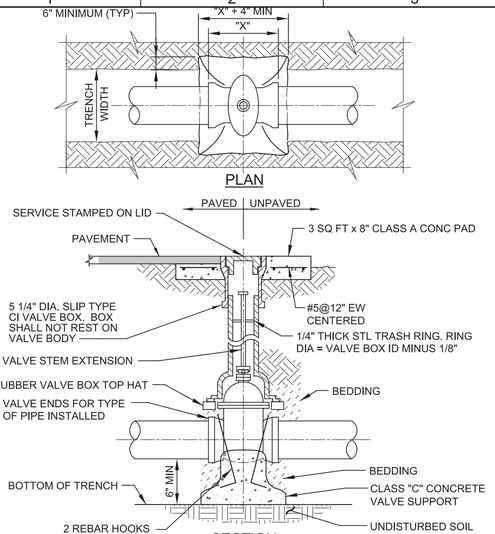

NOTES:

1. ALL BURIED VALVES SHALL BE PROVIDED WITH EXTENSION STEM OPERATION WITH 2" SQUARE AWWA NUT WITHIN 36" OF VALVE BOX COVER. NUT IS TO INDICATE DIRECTION OF ROTATION TO OPEN VALVE.
2. COAT BURIED PIPE AND VALVE BOX AS SPECIFIED.
3. CLEAN VALVE BOX OF ALL DEBRIS AND SOIL.
4. VALVE TYPE AS INDICATED ON THE DRAWINGS.

CP716 TYP — GATE VALVE - DIRECT BURY

J 5/21/20

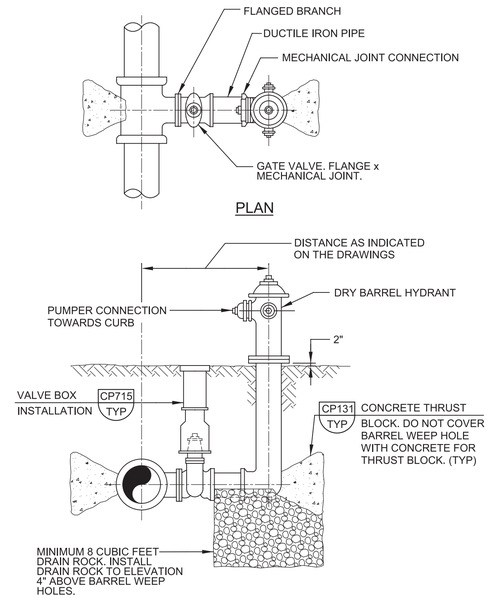

NOTE:

1. SEE DRAWINGS FOR PIPE SIZES.

CP725 TYP — FIRE HYDRANT AND VALVE

SN SHEET 1 OF 2 05/17/19

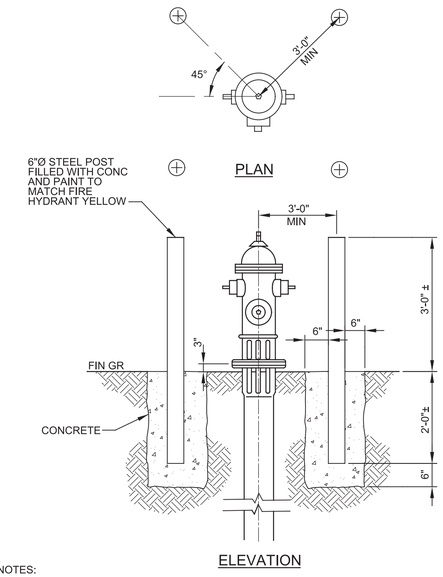

NOTES:

1. TO BE USED IN COMMERCIAL OR INDUSTRIAL AREAS WHERE HYDRANTS ARE UNPROTECTED FROM THE MAIN FLOW OF TRAFFIC. STEAMER CONNECTION ON FIRE HYDRANT SHOULD FACE THE STREET.
2. FIRE HYDRANTS SHALL BE 3'-0" UNOBSTRUCTED FROM PUBLIC R.O.W. AND A MINIMUM CLEARANCE OF 3'-0" ON ALL SIDES.

CP725 TYP — FIRE HYDRANT AND VALVE

SN SHEET 2 OF 2 05/17/19

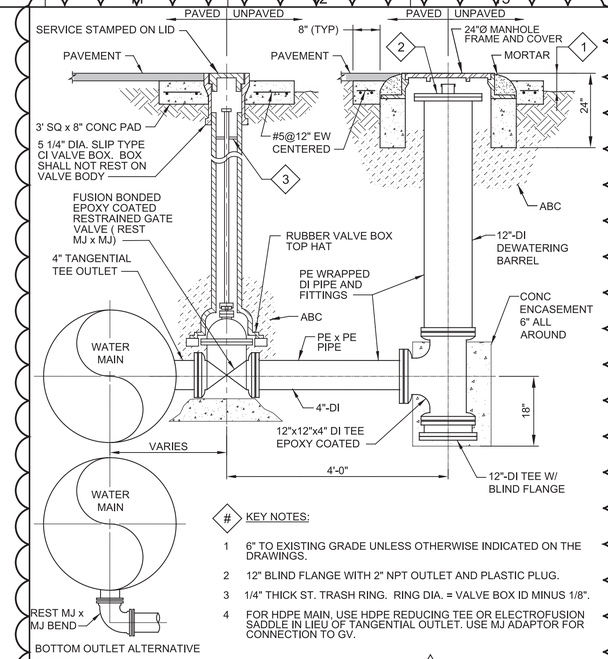

KEY NOTES:

1. 6" TO EXISTING GRADE UNLESS OTHERWISE INDICATED ON THE DRAWINGS.
2. 12" BLIND FLANGE WITH 2" NPT OUTLET AND PLASTIC PLUG.
3. 1/4" THICK ST. TRASH RING. RING DIA. = VALVE BOX ID MINUS 1/8".
4. FOR HDPE MAIN, USE HDPE REDUCING TEE OR ELECTROFUSION SADDLE IN LIEU OF TANGENTIAL OUTLET. USE MJ ADAPTOR FOR CONNECTION TO GV.

CP733 TYP — BLOWOFF - DIRECT BURY

S 11/13/19

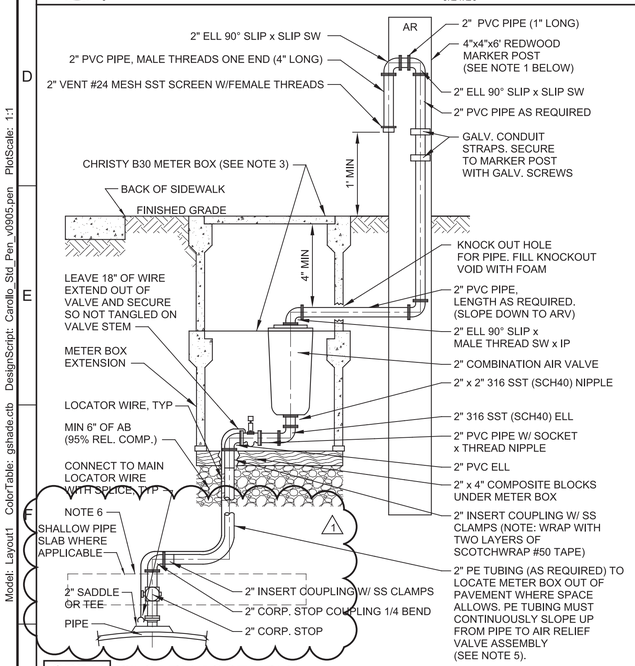

NOTES:

1. INSTALL MARKER POST WITHIN 12" OF METER BOX. BURY MIN DEPTH 3'. PAINT POST WHITE WITH BLACK LETTERS "AR."
2. 2" PVC PIPE SHALL BE SCHEDULE 80.
3. USE TRAFFIC RATED BOXES AND LIDS.
4. INSTALL LOCATOR WIRE FROM MAIN TO BALL VALVE. LOCATOR WIRE SHALL BE A CONTINUOUS #12 AWG SOLID THIN-THWN COPPER WIRE. TAPE WIRE TO 2" PE TUBING @ 5' OC.
5. AIR RELIEF VALVE ASSEMBLY MAY BE INSTALLED ABOVE GROUND IF REQUIRED TO PROVIDE RISING SLOPE FOR PE TUBING. WHEN ARV ASSEMBLY IS INSTALLED ABOVE GROUND, OMIT METER BOXES AND INSTALL COMBINATION AIR VALVE AND VENT INSIDE METAL ENCLOSURE WITH VENT HOLES SET ON CONCRETE PAD PER DETAIL CP745/TYP.
6. WHERE SHALLOW TRENCH DETAIL IS REQUIRED, USE CLSM AROUND THE FUSION SADDLE. AND CLSM BEDDING FOR THE 2" PE PIPE FROM THE SADDLE TO THE CARV . WRAP 2" CORPORATION STOP OR VALVE NEAR THE SADDLE WITH FOAM FOR EXPANSION.
7. FOR DI MAIN, TAPPING SADDLE OR DIRECT TAP (UP TO SIZE ALLOWED BY SPECIFICATIONS) MAY BE USED. FOR HDPE MAIN, USE FUSION OR ELECTROFUSION SADDLE OR TEE.
8. PE TUBING SHALL BE AWWA C901. MINIMUM PIPE ID SHALL MATCH CARV SIZE INDICATED ON DWG.

CP741 TYP — 2" CARV ASSEMBLY

J SHEET 1 OF 2 6/17/20

CP741 TYP — 2" CARV ASSEMBLY

J SHEET 2 OF 2 6/17/20

REV	DATE	BY	DESCRIPTION
1	11-04-20	CE	REVISED PER ADDENDUM NO. 3

DESIGNED CE
DRAWN CE
CHECKED JM
DATE SEPTEMBER 2020

Digitally signed by Jill E. Shankel
Contact Info: Carollo Engineers, Inc.
Date: 2020.11.04

REGISTERED PROFESSIONAL ENGINEER JILL E. SHANKEL No. 54604 CIVIL STATE OF CALIFORNIA

carollo®

ANTIOCH CALIFORNIA OPPORTUNITY LIVES·HERE

CITY OF ANTIOCH
ANTIOCH BRACKISH WATER DESALINATION PROJECT
TYPICALS
TYPICAL DETAILS
CIVIL PIPING 6

VERIFY SCALES
BAR IS ONE INCH ON ORIGINAL DRAWING
0 1"
IF NOT ONE INCH ON THIS SHEET, ADJUST SCALES ACCORDINGLY

JOB NO. 10024A.10
DRAWING NO. TCP06
SHEET NO. 35 OF 498

PROJECT NO. 10024A10 FILE NAME: 10024A10TCP06.dgn

LAST SAVED BY: gleal
Model: Layout1 ColorTable: gshade.ctb DesignScript: Carollo_Std_Pen_v0905.pen PlotScale: 1:1
User: svcPW Plot Date: 04-NOV-2020 1:57:58 PM

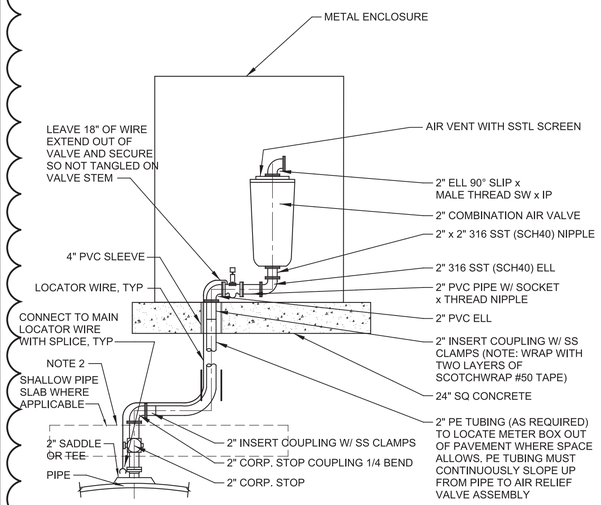

CP745 TYP — AIR/VACUUM VALVE ASSEMBLY - ABOVE GRADE

J 1 OF 3 11/04/20

1

NOTES:

1. INSTALL LOCATOR WIRE FROM MAIN TO BALL VALVE. LOCATOR WIRE SHALL BE A CONTINUOUS #12 AWG SOLID THHN-THWN COPPER WIRE. TAPE WIRE TO 2" PE TUBING @ 5' OC.
2. WHERE SHALLOW TRENCH DETAIL IS REQUIRED, USE CLSM AROUND THE FUSION SADDLE, AND CLSM BEDDING FOR THE 2" PE PIPE FROM THE SADDLE TO THE CARV . WRAP 2" CORPORATION STOP OR VALVE NEAR THE SADDLE WITH FOAM FOR EXPANSION.
3. FOR DI MAIN, TAPPING SADDLE OR DIRECT TAP (UP TO SIZE ALLOWED BY SPECIFICATIONS) MAY BE USED. FOR HDPE MAIN, USE FUSION OR ELECTROFUSION SADDLE OR TEE.
4. PE TUBING SHALL BE AWWA C901. MINIMUM PIPE ID SHALL MATCH CARV SIZE INDICATED ON DWG.

CP745 TYP — AIR/VACUUM VALVE ASSEMBLY - ABOVE GRADE

J 2 OF 3 11/04/20

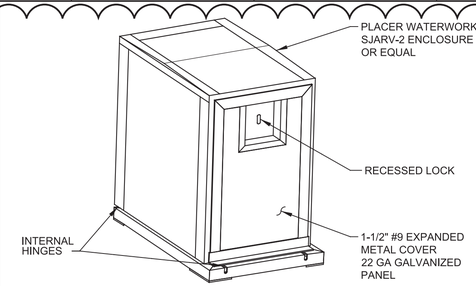

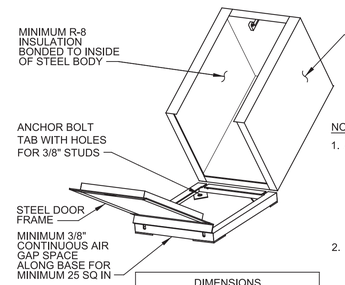

DIMENSIONS	
VALVE SIZE	ENCLOSURE SIZE
3" TO 4"	20" L x 20" W x 30" H
2"	12" L x 12" W x 30" H

NOTES:

1. ALL SURFACES SHALL BE ABRASIVE BLASTED (SSPC SP-5 WHITE METAL BLAST) AND POWDER COATED WITH 2-3 MILS ZINC RICH PRIMER WITH 4-5 MILS ANTI-GRAFITY CHEMISTRY TOP COAT (DFT 6-8 MILS). OWNER TO SELECT COLOR.
2. ENCLOSURE SHALL MOUNT SECURELY TO CONCRETE PAD USING INTEGRAL BOLT TABS. ONE ANCHOR IN EACH CORNER (4 TOTAL).
3. ENCLOSURE SHALL INCLUDE A RECESSED LOCK.
4. SIZE BOX APPROPRIATELY PER TABLE.

CP745 TYP — AIR/VACUUM VALVE ASSEMBLY - ABOVE GRADE

J SHEET 3 OF 3 11/04/20

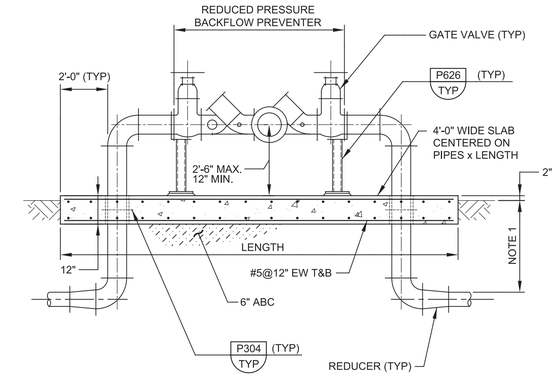

MK	SIZE
3	1"

NOTE:

1. BURY DEPTH SHALL BE BELOW THE FROST LINE.

CP762 TYP — REDUCED PRESSURE DOUBLE BACKFLOW PREVENTER

S 05/21/19

REV	DATE	BY	DESCRIPTION
1	11-04-20	JES	REVISED PER ADDENDUM NO. 3

DESIGNED CE
DRAWN CE
CHECKED JM
DATE SEPTEMBER 2020

Digitally signed by Jill E. Shankel
Contact Info: Carollo Engineers, Inc.
Date: 2020.11.04

REGISTERED PROFESSIONAL ENGINEER JILL E. SHANKEL No. 54604 CIVIL STATE OF CALIFORNIA

carollo

ANTIOCH CALIFORNIA OPPORTUNITY LIVES·HERE

CITY OF ANTIOCH
ANTIOCH BRACKISH WATER DESALINATION PROJECT
TYPICALS
TYPICAL DETAILS CIVIL PIPING 7

VERIFY SCALES
BAR IS ONE INCH ON ORIGINAL DRAWING
0 1"
IF NOT ONE INCH ON THIS SHEET, ADJUST SCALES ACCORDINGLY

JOB NO. 10024A.10
DRAWING NO. TCP07
SHEET NO. 36 OF 498

PROJECT NO. 10024A10 FILE NAME: 10024A10TCP07.dgn

Plot Date: 04-NOV-2020 5:14:05 PM User: svcPW PlotScale: 1:1 DesignScript: Carollo_Std_Pen_v0905.pen ColorTable: gshade.ctb Model: Layout1 LAST SAVED BY: gleal

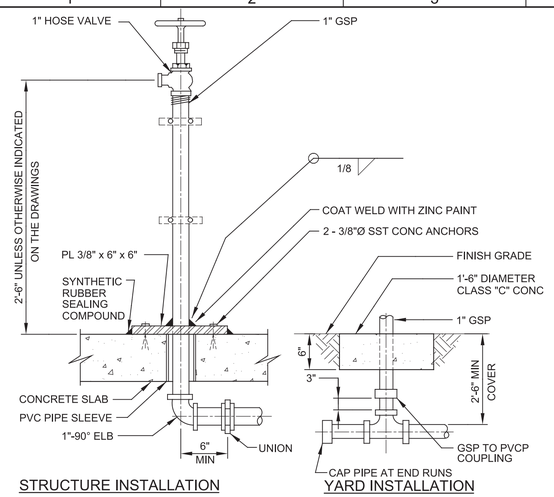

NOTES:

1. SIGN SHALL BE 3/8" THICK PLASTIC RESISTANT TO SUNLIGHT (ULTRAVIOLET) DETERIORATION.
2. SIGN SHALL BE 7" x 10" AND SHALL CONFORM TO THE SPECIFICATIONS.
3. SIGN AS SHOWN IS ROTATED 90° OFF TRUE POSITION. SIGN SHALL BE MOUNTED TO PERMIT EASY READING.
4. INSTALL HOSE RACK M280 TYP AT EACH HOSE VALVE.

M276 TYP — 1" HOSE VALVE AND SIGN

R 06/30/20

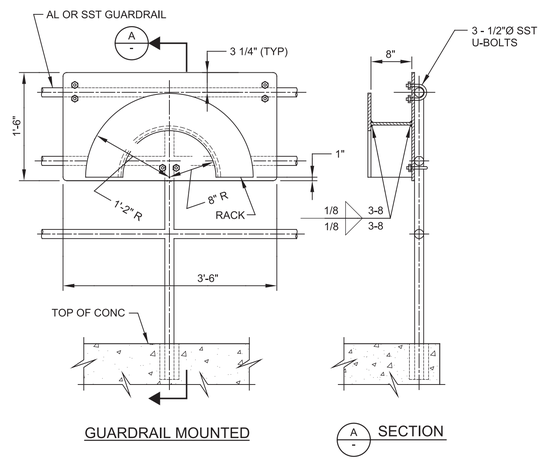

NOTES:

1. HOSE RACK SHALL BE FABRICATED FROM 3/16" ALUMINUM PLATE. ROUND ALL EDGES SMOOTH.
2. HOSE RACKS INSTALLED IN YARD LOCATIONS SHALL BE FREESTANDING. EMBED IN A 4'-6" LONG x 2'-0" WIDE x 8" DEEP CONCRETE PAD WITH #5@12" EW CENTERED.
3. WALL MOUNTED HOSE RACKS ON MASONRY WALL SHALL BE FASTEN TO GROUTED CELLS.

M280 TYP — HOSE RACK

S SHEET 1 OF 2 09/30/07

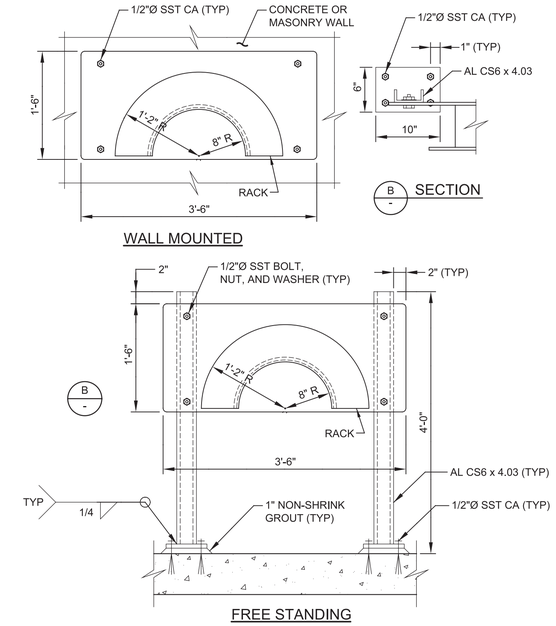

M280 TYP — HOSE RACK

S SHEET 2 OF 2 09/30/07

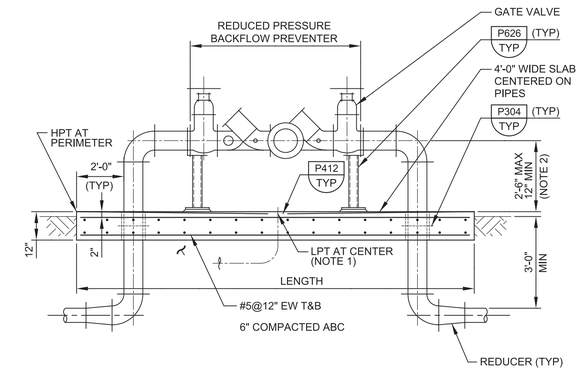

MK	SIZE
1	4"

NOTES:

1. SLAB LOW POINT AT DRAIN (LPT) EQUALS HIGH POINT ELEVATION AT PERIMETER (HPT) MINUS 2" UNO.
2. IF LOCATED IN A CONTAINMENT AREA, THIS DIMENSION SHALL BE FROM THE TOP OF CONTAINMENT WALL.

M310 TYP — REDUCED PRESSURE DOUBLE BACKFLOW PREVENTER

08/21/19

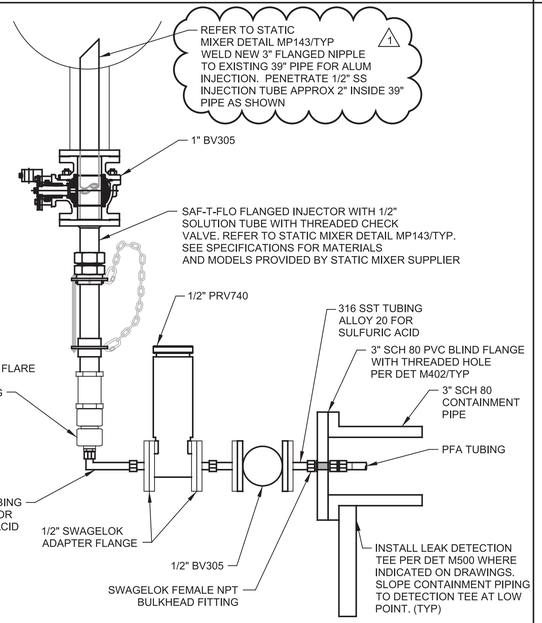

M400 TYP — CHEMICAL INJECTION PIPING PFA TO SST TUBING TRANSITION - DETAIL

J 04/10/20

KEY NOTES:

1. USE LONG SWEEP/LONG RADIUS ELBOWS WITH THE DOUBLE CONTAINMENT PIPING.

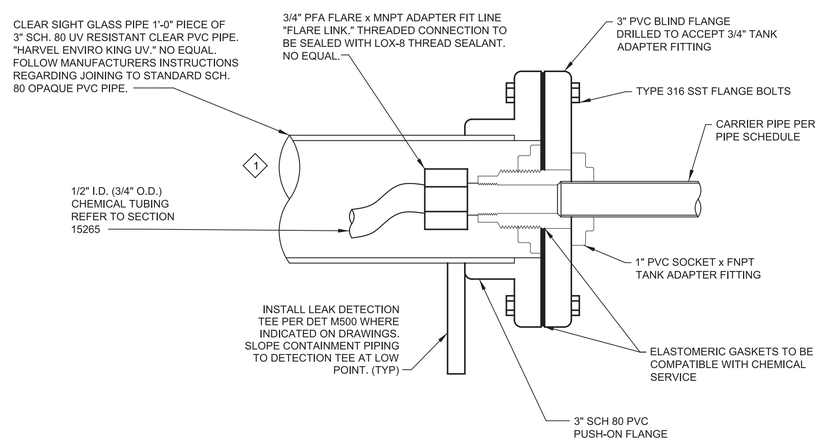

M402 TYP — DETAIL - TRANSITION TO/FROM DOUBLE CONTAINMENT

J 04/10/20

REV	DATE	BY	DESCRIPTION
1	11-04-20	JES	REVISED PER ADDENDUM NO. 3

DESIGNED CE
DRAWN CE
CHECKED MZ
DATE SEPTEMBER 2020

Digitally signed by Scott C. Weddle
Contact Info: Carollo Engineers, Inc.
Date: 2020.11.04 18:08:41-08'00'

REGISTERED PROFESSIONAL ENGINEER SCOTT CLARK WEDDLE No. 49851 CIVIL STATE OF CALIFORNIA

carollo®

ANTIOCH CALIFORNIA OPPORTUNITY LIVES·HERE

CITY OF ANTIOCH
ANTIOCH BRACKISH WATER DESALINATION PROJECT
TYPICALS
TYPICAL DETAILS MECHANICAL 1

VERIFY SCALES
BAR IS ONE INCH ON ORIGINAL DRAWING
0 1"
IF NOT ONE INCH ON THIS SHEET, ADJUST SCALES ACCORDINGLY

JOB NO. 10024A.10
DRAWING NO. TM01
SHEET NO. 54 OF 498

PROJECT NO. 10024A10 FILE NAME: 10024A10TM01.dgn

Model: Layout1 ColorTable: gshade.ctb DesignScript: Carollo_Std_Pen_v0905.pen PlotScale: 1:1 Plot Date: 03-NOV-2020 7:16:39 PM User: svcPW LAST SAVED BY: gleal

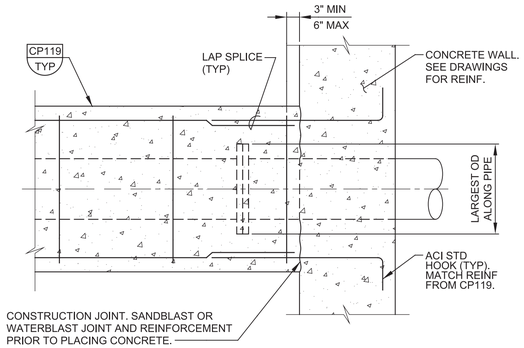

A - SECTION AT WALL

NOTE:

1. TYPE OF PIPE AND TYPE OF PIPE JOINT OR COUPLER AS INDICATED ON THE DRAWINGS.

MP140 TYP — CONCRETE PIPE ENCASEMENT - CONNECTION AT STRUCTURE

NS SHEET 1 OF 2 12/20/19

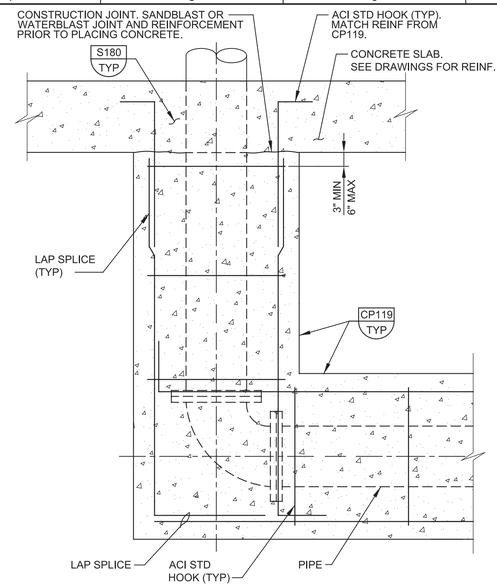

B - SECTION AT SLAB

MP140 TYP — CONCRETE PIPE ENCASEMENT - CONNECTION AT STRUCTURE

NS SHEET 2 OF 2 12/20/19

STATIC MIXER SCHEDULE AND SPECIFICATIONS

Drawing Number	Static Mixer Tag Number (1)	Chemicals Injected	Injection Quill Number (2)	Location	Service	Nominal Pipe Diameter (Inches) (3)	Pipe Material	Max Flow Rate (MGD)	Max Velocity (FPS)	Static Mixer Model No. (4)	Mixing Plate Material	Beta	Allowable Headloss at Max Flow (PSI)
21N21-05	SMX 21.0601B	Sulfuric Acid	IJQ 66.0802A	Raw Water Mixer Vault - Plant A	Raw Water	30	DI	16	5.0	2800	FRP	0.9	1.2
21N21-05	SMX 21.0601A	Sulfuric Acid	IJQ 66.0802B	RW Mixer Vault - Plant B	Raw Water	39	Conc Cylinder (existing)	36	6.7	6000	Epoxy Coated Carbon Steel - shop applied	NA	0.5
25N25-06	SMX 66.0804	Sulfuric Acid	IJQ 66.0804	Upstream of Cartridge Filters	Brackish Filtered Water	30	316 SS	16	5.0	2800	FRP	0.9	1.2
25N25-07	SMX 25.0006	Scale Inhibitor	IJQ 69.0101	Downstream of Cartridge Filters	Brackish Filtered Water	30	316 SS	16	5.0	2800	FRP	0.9	1.2
25N25-29	SMX 25.0901	Calcium Chloride	IJQ 25.0901	Downstream of RO Membranes	RO Permeate	24	316 SS	12	5.9	2800	FRP	0.9	1.9
25N25-03	SMX 65.0201	Sodium Bisulfite	IJQ 65.0201	Brackish Filtered Water PS	Brackish Filtered Water	30	316 SS	16	5.0	2800	FRP	0.9	1.2
25N25-05	SMX 26.0301A	Liquid Ammonium Sulfate	IJQ 26.0301A	Clearwell	RO Permeate	24	316 SS	12	5.9	2800	FRP	0.9	1.9
25N25-05	-	Hydrofluosilicic Acid	IJQ 26.0301B	-	RO Permeate	24	-	12	5.9	-	-	-	-
25N25-05	SMX 26.0301B	Sodium Hypochlorite	IJQ 26.0301C	Clearwell	RO Permeate	24	316 SS	12	5.9	2800	FRP	0.9	1.9
25N25-05	-	Sodium Hydroxide	IJQ 26.0301D	-	RO Permeate	24	-	12	5.9	-	-	-	-

Notes:

(1) Flanged connections for each static mixer per Pipe Schedule. Mixer gaskets shall be teflon unless otherwise noted. All materials shall be NSF 61 certified.

(2) Injection quills shall be Safe-T-Flo Retractable, or equal, with 316 SS bodies, 1/2" hastelloy injection tubing and ports, enter at top of mixer unless otherwise noted. Quills to be provided by static mixer manufacturer. Transition from double contained piping per det m400/tm01

(3) Contractor shall field verify all dimensions prior to ordering mixers.

(4) Mixers shall be Westfall Manufacturing Co., or equal, with model number and features as specified.

MP143 TYP — STATIC MIXER SPECIFICATIONS

J 06/19/20

REV	DATE	BY	DESCRIPTION
1	11-04-20	JES	REVISED PER ADDENDUM NO. 3

DESIGNED CE
DRAWN CE
CHECKED MZ
DATE SEPTEMBER 2020

Digitally signed by Scott C. Weddle
Contact Info: Carollo Engineers, Inc.
Date: 2020.11.04 18:08:19-08'00'

REGISTERED PROFESSIONAL ENGINEER SCOTT CLARK WEDDLE No. 49851 CIVIL STATE OF CALIFORNIA

carollo®

ANTIOCH CALIFORNIA OPPORTUNITY LIVES•HERE

CITY OF ANTIOCH

ANTIOCH BRACKISH WATER DESALINATION PROJECT

TYPICALS

TYPICAL DETAILS
MECHANICAL 3

VERIFY SCALES
BAR IS ONE INCH ON ORIGINAL DRAWING
0 1"
IF NOT ONE INCH ON THIS SHEET, ADJUST SCALES ACCORDINGLY

JOB NO. 10024A.10
DRAWING NO. TM03
SHEET NO. 56 OF 498

PROJECT NO. 10024A10 FILE NAME: 10024A10TM03.dgn

Plot Date: 03-NOV-2020 7:12:47 PM
User: svcPW
Model: Layout1 ColorTable: gshade.ctb DesignScript: Carollo_Std_Pen_v0905.pen PlotScale: 1:1
LAST SAVED BY: gleal

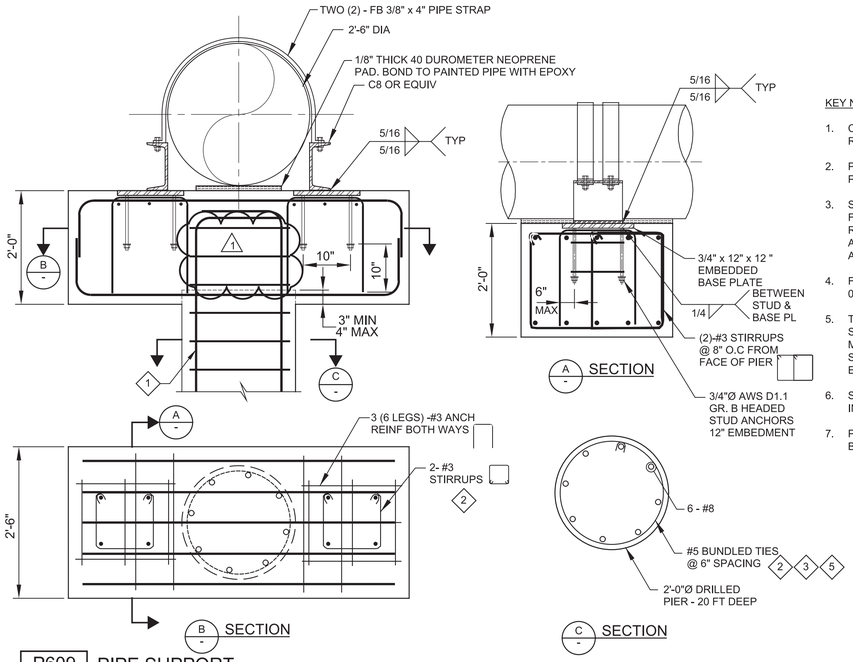

KEY NOTES:

1. CONTRACTOR'S OPTION TO PROVIDE BAR END TERMINATOR RATHER THAN STANDARD HOOK.
2. PROPERTIES BUNDLED WITH YIELD STRENGTH OF 80,0000 PSI (ASTM615 GR 80).
3. SPIRALS MAY BE USED IN LIEU OF HORIZONTAL TIES SHOWN FABRICATED. SPIRALS TO CONFORM TO ACI 318 REQUIREMENTS. IF LAPS ARE REQUIRED, LAP AND TIE IN ACCORDANCE WITH ACI 318 REQUIREMENTS AND AS APPROVED BY THE ENGINEER.
4. FOR CONCRETE CLASS, SEE SPECIFICATION SECTION 03_30_01.
5. TIE ENDS SHALL TERMINATE WITH 135 DEGREE MINIMUM STANDARD HOOKS AND ENGAGE A LONGITUDINAL BAR WITH MINIMUM OVERLAP. ENDS OF ADJACENT CIRCULAR TIES SHALL BE STAGGERED AROUND THE PERIMETER ENCLOSING THE LONGITUDINAL BAR.
6. SEE SPECIFICATION SECTION 2467A FOR ADDITIONAL INFORMATION.
7. PRIOR TO DRILLING OF PIERS ALL KNOWN UTILITIES SHALL BE EXPOSED.

P609 TYP — PIPE SUPPORT

J 09/09/20

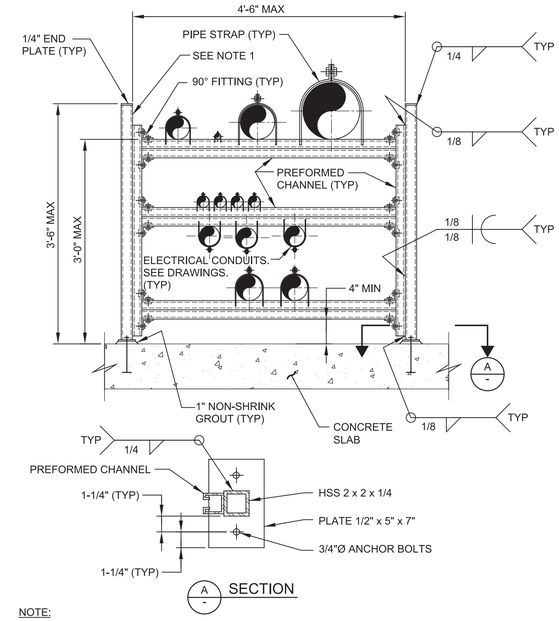

NOTE:

1. HOT-DIP GALVANIZE SUPPORT COLUMN ASSEMBLIES AFTER FABRICATION.

P610 TYP — CANTILEVER PIPE AND CONDUIT SUPPORT RACK

N 06/25/13

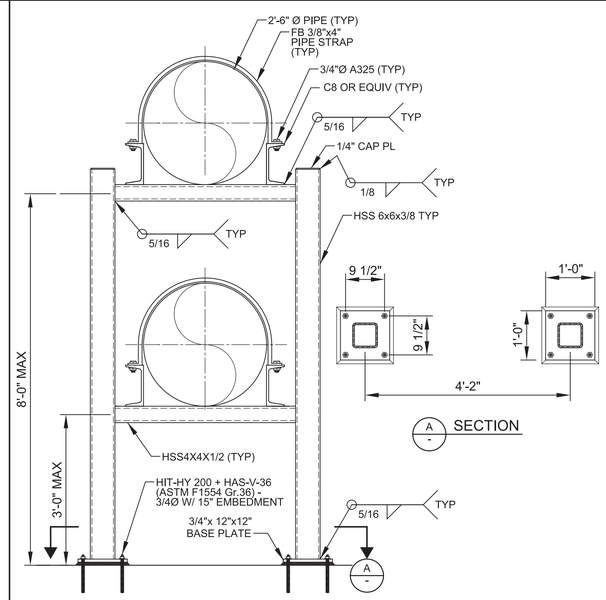

NOTE:

1. ALL MATERIALS SHALL BE HOT-DIPPED GALVANIZED AFTER FABRICATION.

P611 TYP — PIPE SUPPORT RACK

J 08/06/20

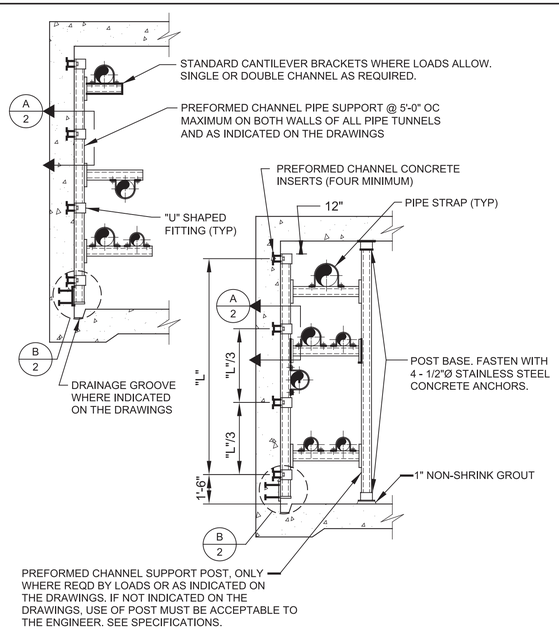

P612 TYP — WALL MOUNTED PREFORMED CHANNEL PIPE SUPPORT RACK

N SHEET 1 OF 2 09/18/13

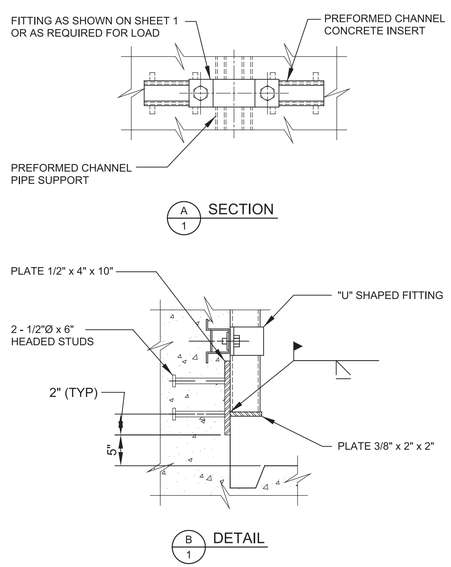

P612 TYP — WALL MOUNTED PREFORMED CHANNEL PIPE SUPPORT RACK

N SHEET 2 OF 2 09/18/13

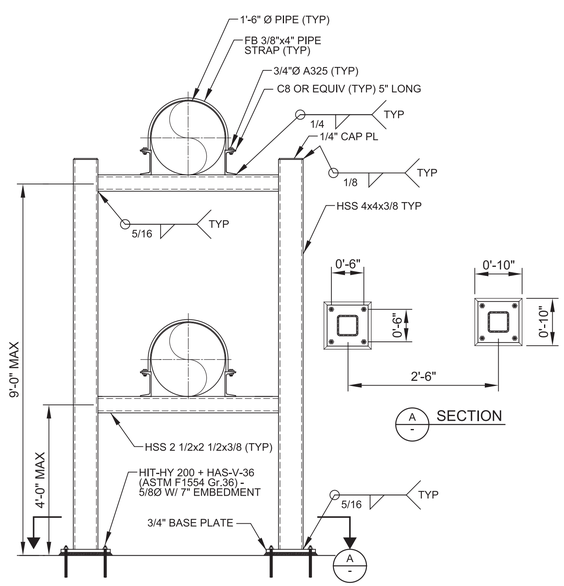

NOTE:

1. ALL MATERIALS SHALL BE HOT-DIPPED GALVANIZED AFTER FABRICATION.

P613 TYP — PIPE SUPPORT RACK

J 09/01/20

REV	DATE	BY	DESCRIPTION
1	11-04-20	KP	REVISED PER ADDENDUM NO. 3

DESIGNED CE
DRAWN CE
CHECKED MZ
DATE SEPTEMBER 2020

Digitally signed by Jill E. Shankel
Contact Info: Carollo Engineers, Inc.
Date: 2020.11.04

REGISTERED PROFESSIONAL ENGINEER JILL E. SHANKEL No. 54604 CIVIL STATE OF CALIFORNIA

carollo®

ANTIOCH CALIFORNIA OPPORTUNITY LIVES·HERE

CITY OF ANTIOCH
ANTIOCH BRACKISH WATER DESALINATION PROJECT
TYPICALS
TYPICAL DETAILS PIPING 6

VERIFY SCALES
BAR IS ONE INCH ON ORIGINAL DRAWING
0 1"
IF NOT ONE INCH ON THIS SHEET, ADJUST SCALES ACCORDINGLY

JOB NO. 10024A.10
DRAWING NO. TP06
SHEET NO. 66 OF 498

LAST SAVED BY: tumadhay Model: Layout1 ColorTable: gshade.ctb DesignScript: Carollo_Std_Pen_v0905.pen PlotScale: 1:1 User: svcPW Plot Date: 02-NOV-2020 11:52:39 AM

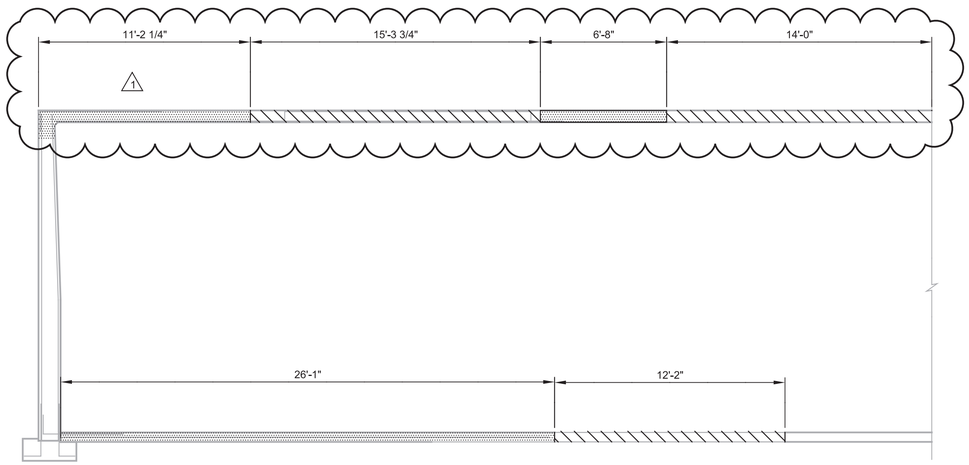

E SECTION
25D03
SCALE: 1/4"=1'-0"
FILE: 10024A1025D101

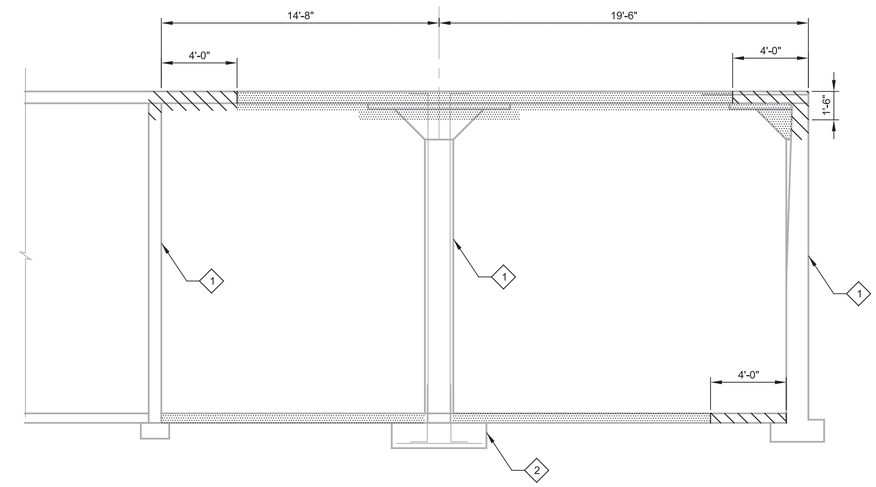

F SECTION
25D03
SCALE: 1/4"=1'-0"
FILE: 10024A1025D101

LEGEND:

DEMOLISH CONCRETE. EXISTING REBAR TO REMAIN UNDAMAGED TO LIMIT SHOWN.

DEMOLISH CONCRETE AND REBAR TO EXTENTS SHOWN.

KEY NOTES:

1. EXISTING COLUMN REINFORCEMENT TO REMAIN UNDAMAGED. CAPITAL CAN BE DEMOLISHED. SAVE COLUMN REINFORCEMENT.
2. DO NOT DEMOLISH COLUMN FOOTINGS.

REV	DATE	BY	DESCRIPTION
1	11-04-20	KP	REVISED PER ADDENDUM NO. 3

DESIGNED KVP
DRAWN TU
CHECKED
DATE SEPTEMBER 2020

Digitally signed by Scott C. Weddle
Contact Info: Carollo Engineers, Inc.
Date: 2020.11.04 17:08:57-08'00'

REGISTERED PROFESSIONAL ENGINEER SCOTT CLARK WEDDLE No. 49851 CIVIL STATE OF CALIFORNIA

carollo

ANTIOCH CALIFORNIA OPPORTUNITY LIVES·HERE

CITY OF ANTIOCH
ANTIOCH BRACKISH WATER DESALINATION PROJECT
DEMOLITION
BRACKISH FILTERED WATER PUMP STATION SECTIONS

VERIFY SCALES
BAR IS ONE INCH ON ORIGINAL DRAWING
0 1"
IF NOT ONE INCH ON THIS SHEET, ADJUST SCALES ACCORDINGLY

JOB NO. 10024A.10
DRAWING NO. 25D04
SHEET NO. 93 OF 498

Plot Date: 04-NOV-2020 1:14:03 PM
User: svcPW
PlotScale: 1:1
DesignScript: Carollo_Std_Pen_v0905.pen
ColorTable: gshade.ctb
Model: Layout1
LAST SAVED BY: tumadhay

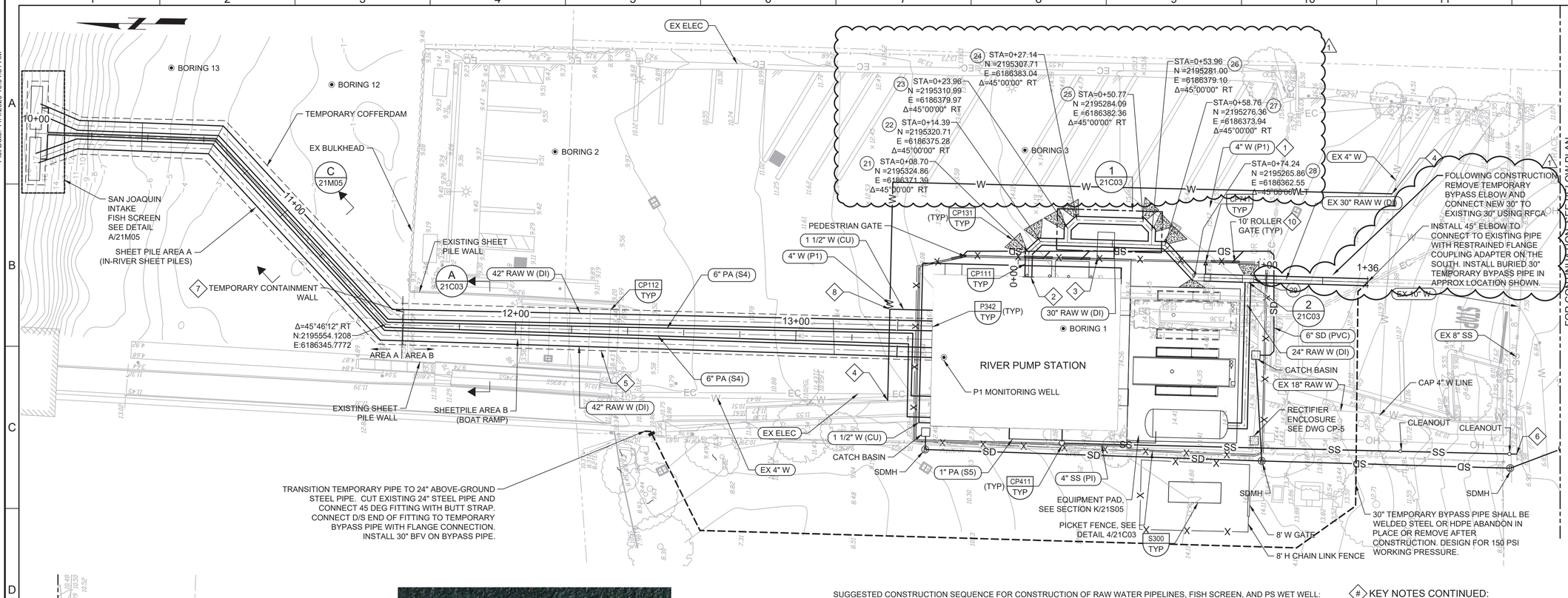

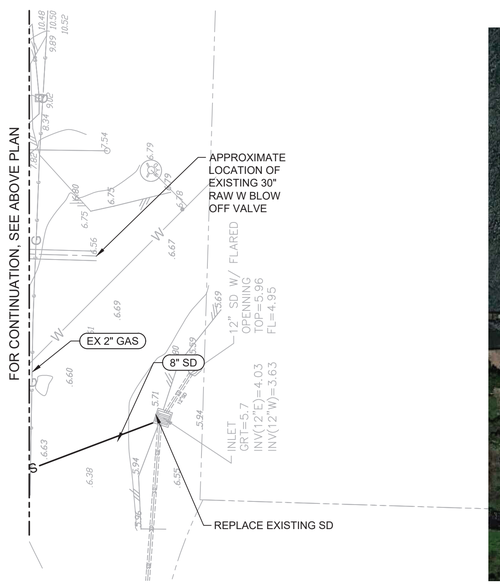

PHOTO - PARTIAL PLAN
SOIL LAYDOWN AREA

PLAN
SCALE: 1"=20'
FILE: Proj_Num_01C101

SUGGESTED CONSTRUCTION SEQUENCE FOR CONSTRUCTION OF RAW WATER PIPELINES, FISH SCREEN, AND PS WET WELL:

1. INSTALL TEMPORARY BYPASS PIPE IN APPROXIMATE LOCATION SHOWN WITH APPROX 3 FEET OF COVER. CONSTRUCT TIE-INS TO EXISTING RAW WATER PIPE DURING SUMMER MONTHS WHEN EXISTING PUMP STATION IS NOT IN USE. REFER TO SPEC SECTION 01140, WORK RESTRICTIONS. DRAIN APPROXIMATELY 414,000 GALLONS THROUGH EXISTING 2" BLOW OFF VALVE ON FULTION SHIPYARD ROAD TO STORM DRAIN. DISPOSE OF SOIL IN ACCORDANCE WITH SECTION 01354, HAZARDOUS MATERIALS PROCEDURES. GROUNDWATER IS NOT ANTICIPATED TO BE ENCOUNTERED DURING EXCAVATION FOR THE TEMPORARY PIPELINE OR CONNECTIONS TO EXISTING PIPELINE.
2. INSTALL CONTAINMENT SHEET PILE WALL IN RIVER AT NORTH END OF BOAT RAMP IN APPROX LOCATION SHOWN, AND AT A DEPTH OF THE SHEET PILES IN AREA B. SEAL THE CONTAINMENT WALL AGAINST THE TEMPORARY COFFERDAM SHEET PILES TO THE EAST AND WEST. PURPOSE OF WALL IS TO PREVENT CONCRETE CUTTINGS FROM ENTERING RIVER AND TO CUT OFF GROUNDWATER PASSAGE INTO RIVER. WORK SHALL BE COMPLETED DURING ALLOWABLE IN-RIVER WORK WINDOW (AUGUST 1 - SEPTEMBER 30). REFER TO SPEC SECTION 01140.
3. INSTALL TEMPORARY COFFERDAM SHEET PILES IN AREA A DURING ALLOWABLE IN-RIVER WORK WINDOW. CONDUCT FISH RESCUE, SEE SECTION 01061. CONSTRUCT PIPELINES AND FISH SCREENS IN AREA A. DRY OR WET EXCAVATION IS ALLOWED.
4. SAWCUT EXISTING BOAT RAMP CONCRETE AS NEEDED FOR INSTALLATION OF SHEET PILES IN AREA B. REMOVE CONCRETE. WORK CAN BE CONDUCTED IN THE WET OR DRY AS LONG AS CONTAINMENT WALL IS IN PLACE.
5. INSTALL SHEET PILES FOR PS WET WELL. BUTT THE NORTH-SOUTH COFFERDAM WALLS TO THE WET WELL SHEET PILE WALL TO FORM A SEAL. SEE DWGS 21S01 AND 21S03 FOR WET WELL DETAILS. EXCAVATE AND DISPOSE OF SOIL AND GROUNDWATER AS SPECIFIED IN 01354. INSTALL CONCRETE PLUG AT BOTTOM OF EXCAVATION TO CONTROL GROUNDWATER SEEPAGE. CONSTRUCT WET WELL AND OPENINGS FOR PIPELINE CONNECTIONS WITH SHEET PILES IN PLACE. INSTALL SLUICE GATES AT RAW WATER PIPE ENTRANCES TO WET WELL. CUT WET WELL SHEET PILES ON THE NORTH SIDE OF THE WET WELL BELOW INVERT OF 42" INTAKE PIPES.
6. INSTALL SHEET PILES IN AREA B DEEP ENOUGH TO CUT OFF GROUNDWATER SEEPAGE. BUTT SHEET PILES AGAINST PS WET WELL TO FORM SEAL. DEWATER AREA B AND INSTALL PIPELINES AND CONNECTIONS TO WET WELL. TREAT GROUNDWATER AND DISPOSE TO SANITARY SEWER AS SPECIFIED IN 01354. REMOVE AND DISPOSE SOIL AS SPECIFIED IN 01354.
7. CUT OFF SHEET PILES IN PUMP STATION WET WELL AND IN AREA B APPROXIMATELY 5 FEET BELOW GROUND. BACKFILL PIPELINES WITHIN AREA B WITH CLSM. REPAIR BOAT RAMP. CONTROL GROUNDWATER AS NEEDED. TREAT AND DISPOSE GROUNDWATER TO SEWER AS SPECIFIED IN 01354.
8. REMOVE SHEET PILES IN AREA A DURING ALLOWABLE WORK WINDOW. REMOVE CONTAINMENT WALL. CONNECT RAW WATER AND AIR BURST PIPELINES IN AREA A TO PIPELINES IN AREA B UNDER WATER.
9. SUGGESTED SEQUENCE PROVIDED FOR INFORMATION ONLY. CONTRACTOR RESPONSIBLE FOR DEVELOPING CONSTRUCTION SEQUENCE.

KEY NOTES CONTINUED:

8. SEE DETAIL 3/21C03 FOR CONNECTION
9. THE CONTRACTOR MAY REQUEST TO USE THE AREA SHOWN FOR TEMPORARY LAYDOWN OF SOIL EXCAVATED AT THE SITE FOR DRYING AND TESTING. AS PART OF THE REQUEST THE CONTRACTOR SHALL SUBMIT IN ACCORDANCE WITH SECTION 01330 A PROPOSED DESIGN FOR PREVENTING ANY SOLIDS OR LIQUIDS FROM PERCOLATING INTO THE UNDERLYING SOIL OR RUNNING OFF SITE. AT A MINIMUM THE DESIGN SHALL INCLUDE PLASTIC LINING OF THE LAYDOWN AREA AND BERMS AROUND THE PERIMETER TO PREVENT RUNOFF. THE CONTRACTOR SHALL ALSO SUBMIT A PROPOSED MONITORING PLAN FOR THE LAYDOWN AREA TO DEMONSTRATE THAT NO RUNOFF OR PERCOLATION IS OCCURRING
10. ROLLER GATES PER SECTION 02820. PROVIDE TRENCH DRAIN TO SPAN GATE OPENINGS. ZURN MODEL Z886-HD 6-3/4" WIDE REVEAL, 4" THROAT TRENCH DRAIN, OR EQUAL, WITH HEAVY DUTY FRAME AND WITH 6" NO-HUB BOTTOM OUTLET. ZURN DGC, OR EQUAL, 5-3/8" WIDE GRATE (CLASS C).

GENERAL NOTES:

1. SEE DWG G03 FOR GENERAL NOTES AND PIPELINE NOTES.
2. REFER TO SPEC SECTION 01354 FOR HANDLING OF SOIL AND GROUND WATER AT THIS SITE.
3. SEE DWG 21C02 FOR 42" RAW W, 30" RAW W, AND 8" SS PROFILES.

KEY NOTES:

1. EXISTING 4" W TO BE PERMANENTLY RELOCATED.
2. DOUBLE JOINTS REQUIRED SIMILAR TO TYP DETAIL P342. SEE DETAIL B/21M02 FOR CONTINUATION.
3. PRECAST CONCRETE VAULT FOR MAGNETIC FLOW METER. SEE DETAIL 1/21C03.
4. CONNECT TO EXISTING 4" W. CONTRACTOR TO PROVIDE ALL RESTRAINED ADAPTERS AND FITTINGS. CONTRACTOR TO CONFIRM EXISTING MATERIAL PRIOR TO PURCHASE.
5. CUT AND REMOVE PORTION OF EXISTING BOAT RAMP FOR INSTALLATION OF COFFERDAM AND NEW PIPES. INSTALL NEW BOAT RAMP SLAB WHERE EXISTING SLAB WAS REMOVED PER SECTION A/21C03.
6. CONNECT TO EXISTING 8" SS, SEE DETAIL 1/21CO2. CONTRACTOR TO CONFIRM EXISTING MATERIAL AND ELEVATION .
7. CONTRACTOR SHALL INSTALL TEMPORARY CONTAINMENT WALL DURING CUTTING AND REMOVAL OF CONCRETE FROM EXISTING BOAT RAMP TO PREVENT ANY DEBRIS FROM ENTERING THE RIVER. CONTRACTOR SHALL ALSO INSTALL INSTALL TEMPORARY CONTAINMENT WALL DURING INSTALLATION OF NEW CONCRETE TO PREVENT DEBRIS FROM ENTERING THE RIVER.

Call before you Dig
Avoid cutting underground utility lines. It's costly.
Call 811

21C01

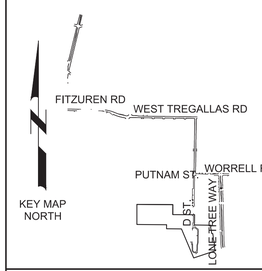

SCALE
0 10' 20' 40'
HORIZONTAL

REV	DATE	BY	DESCRIPTION
1	11-4-2020	MMB	REVISED PER ADDENDUM #3

DESIGNED JES
DRAWN ART
CHECKED JM
DATE SEPTEMBER 2020

Digitally signed by Scott C. Weddle
Contact Info: Carollo Engineers, Inc.
Date: 2020.11.04 17:05:28-08'00'

REGISTERED PROFESSIONAL ENGINEER SCOTT CLARK WEDDLE No. 49851 CIVIL STATE OF CALIFORNIA

carollo

ANTIOCH CALIFORNIA OPPORTUNITY LIVES·HERE

CITY OF ANTIOCH
ANTIOCH BRACKISH WATER DESALINATION PROJECT
CIVIL
RIVER PUMP STATION YARD PIPING - 1

VERIFY SCALES
BAR IS ONE INCH ON ORIGINAL DRAWING
0 1"
IF NOT ONE INCH ON THIS SHEET, ADJUST SCALES ACCORDINGLY

JOB NO. 10024A.10
DRAWING NO. 21C01
SHEET NO. 95 OF 498

Plot Date: 11/4/2020 10:04:51 AM
FILE NAME: 10024A1021C01.dwg
PROJECT NO. 10024A10
LAST SAVED BY: atucker

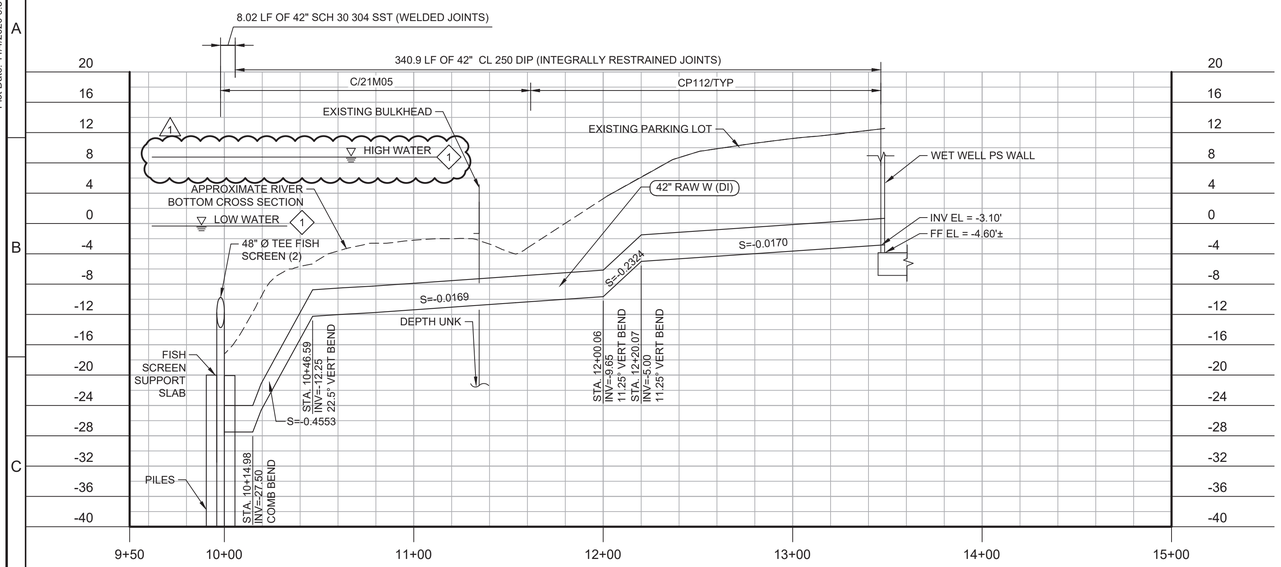

42" INTAKE PIPELINES PROFILE

HORIZ SCALE: 1"=40'
VERT SCALE: 1"=4'
FILE: Proj_Num_01C101

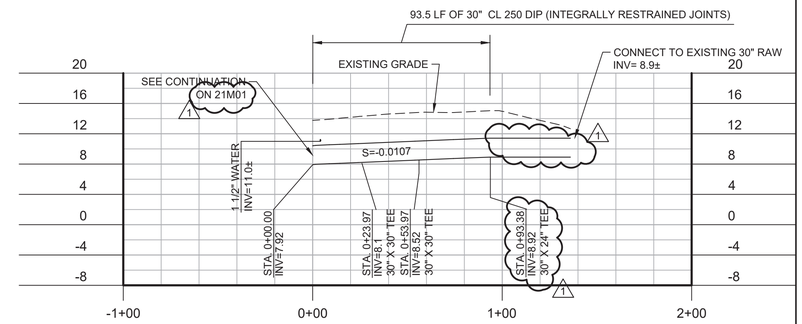

30" RAW W PROFILE

HORIZ SCALE: 1"=40'
VERT SCALE: 1"=4'
FILE: Proj_Num_01C101

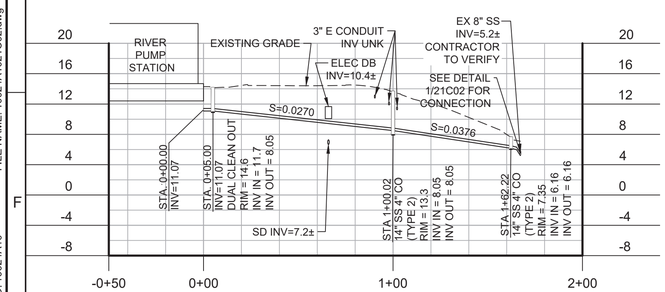

4" SS PROFILE

HORIZ SCALE: 1"=40'
VERT SCALE: 1"=4'
FILE: Proj_Num_01C101

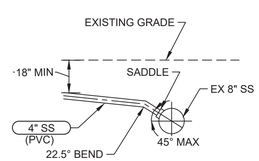

1 CONNECTION TO EXISTING 8" SS

SCALE: 1/4" = 1'-0"
FILE: -

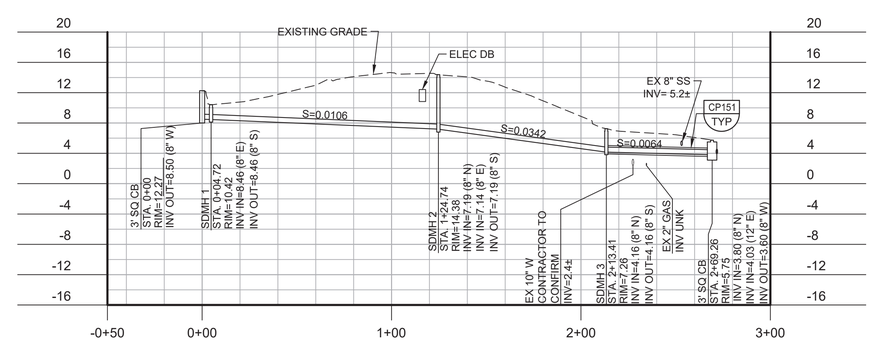

8" STORM DRAIN

HORIZ SCALE: 1"=40'
VERT SCALE: 1"=4'
FILE: Proj_Num_01C101

GENERAL NOTES:

1. SEE SHEET G05 FOR GENERAL NOTES AND PIPELINE NOTES.

KEY NOTES:

1. CONTRACTOR TO REPLACE IN KIND DETECTOR LOOPS AND ELECTRICAL CONDUIT DAMAGED BY CONSTRUCTION.

Call before you Dig
Avoid cutting underground utility lines. It's costly.
Call 811

KEY MAP

SCALE
0 10' 20' 40'
HORIZONTAL
0 2' 4' 8'
VERTICAL

REV	DATE	BY	DESCRIPTION
1	11-4-2020	MMB	REVISED PER ADDENDUM #3

DESIGNED JES
DRAWN ART
CHECKED JM
DATE SEPTEMBER 2020

Digitally signed by Scott C. Weddle
Contact Info: Carollo Engineers, Inc.
Date: 2020.11.04 17:08:03-08'00'

REGISTERED PROFESSIONAL ENGINEER SCOTT CLARK WEDDLE No. 49851 CIVIL STATE OF CALIFORNIA

carollo

ANTIOCH CALIFORNIA OPPORTUNITY LIVES·HERE

CITY OF ANTIOCH
ANTIOCH BRACKISH WATER DESALINATION PROJECT
CIVIL
RIVER PUMP STATION
SITE PIPING PROFILES

VERIFY SCALES
BAR IS ONE INCH ON ORIGINAL DRAWING
0 1"
IF NOT ONE INCH ON THIS SHEET, ADJUST SCALES ACCORDINGLY

JOB NO. 10024A.10
DRAWING NO. 21C02
SHEET NO. 96 OF 498

Plot Date: 11/4/2020 9:57:47 AM
FILE NAME: 10024A1021C02.dwg
PROJECT NO. 10024A10
LAST SAVED BY: atucker

Plot Date: 11/4/2020 12:58:08 PM

KEY TAGS:

1	SMX 21.0601A	39" STATIC MIXER
2	SMX 21.0601B	30" STATIC MIXER
3	FE 21.0063	18" MAGNETIC FLOW METER
4	BFP XX.XXXX	4" BACK FLOW PREVENTER

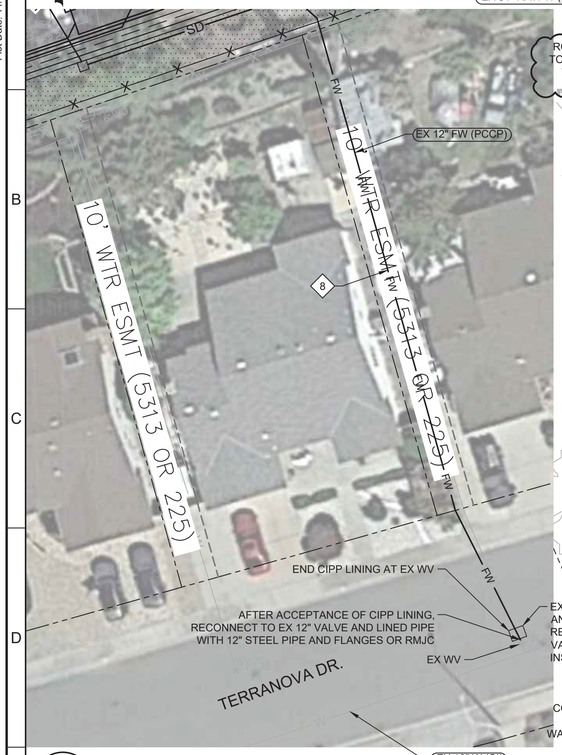

2 12" FW CIPP WORK

SCALE: 1"=20'
FILE: PHOTO FOR C02 RW PIPING

1 SEDIMENTION BASIN AT ABOVE GROUND 12" RW

SCALE: NONE
FILE: PHOTO FOR C02 RW PIPING

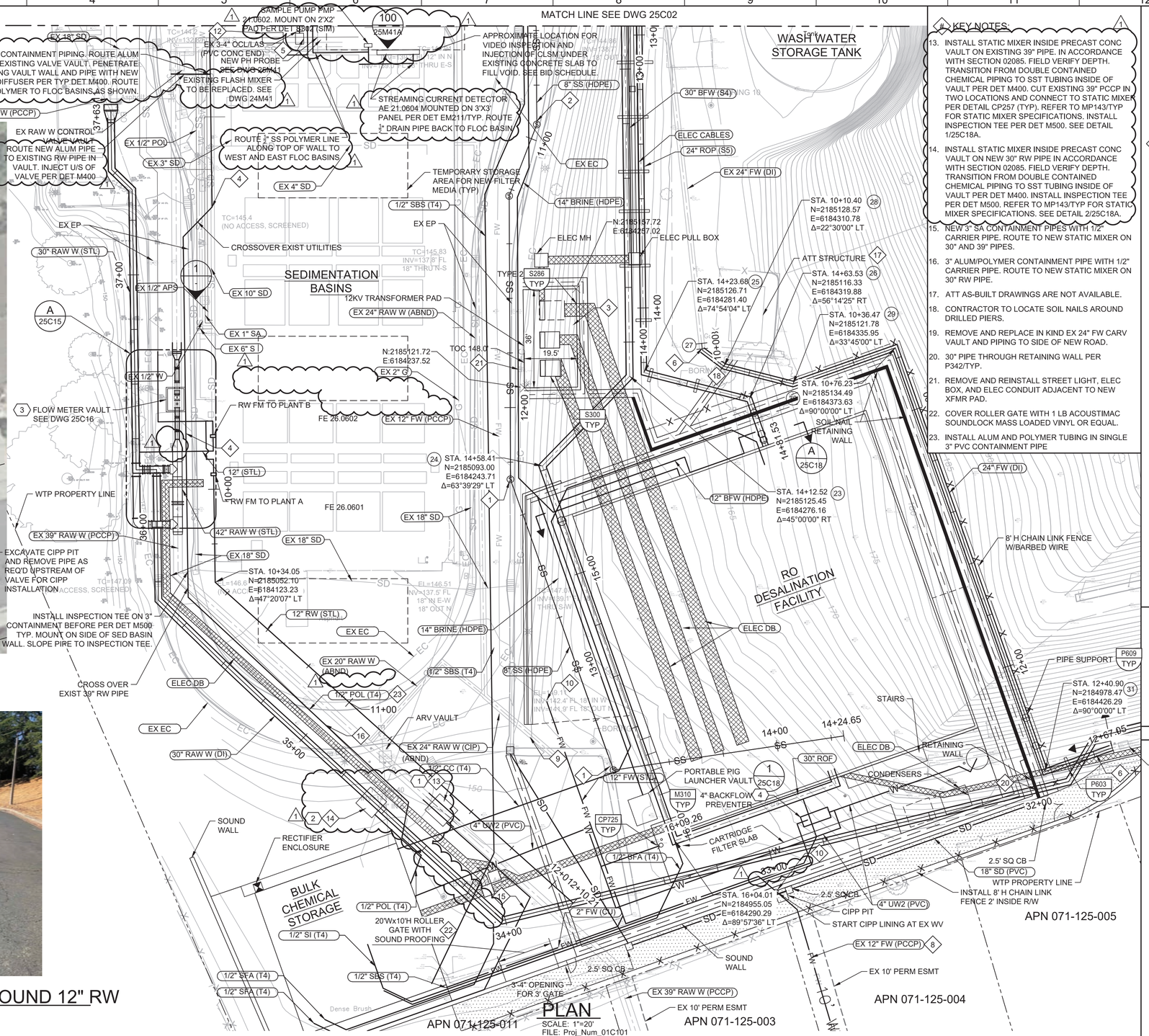

KEY NOTES:

13. INSTALL STATIC MIXER INSIDE PRECAST CONC VAULT ON EXISTING 39" PIPE. IN ACCORDANCE WITH SECTION 02085. FIELD VERIFY DEPTH. TRANSITION FROM DOUBLE CONTAINED CHEMICAL PIPING TO SST TUBING INSIDE OF VAULT PER DET M400. CUT EXISTING 39" PCCP IN TWO LOCATIONS AND CONNECT TO STATIC MIXER PER DETAIL CP257 (TYP). REFER TO MP143/TYP FOR STATIC MIXER SPECIFICATIONS. INSTALL INSPECTION TEE PER DET M500. SEE DETAIL 1/25C18A.
14. INSTALL STATIC MIXER INSIDE PRECAST CONC VAULT ON NEW 30" RW PIPE IN ACCORDANCE WITH SECTION 02085. FIELD VERIFY DEPTH. TRANSITION FROM DOUBLE CONTAINED CHEMICAL PIPING TO SST TUBING INSIDE OF VAULT PER DET M400. INSTALL INSPECTION TEE PER DET M500. REFER TO MP143/TYP FOR STATIC MIXER SPECIFICATIONS. SEE DETAIL 2/25C18A.
15. NEW 3" SA CONTAINMENT PIPES WITH 1/2" CARRIER PIPE. ROUTE TO NEW STATIC MIXER ON 30" AND 39" PIPES.
16. 3" ALUM/POLYMER CONTAINMENT PIPE WITH 1/2" CARRIER PIPE. ROUTE TO NEW STATIC MIXER ON 30" RW PIPE.
17. ATT AS-BUILT DRAWINGS ARE NOT AVAILABLE.
18. CONTRACTOR TO LOCATE SOIL NAILS AROUND DRILLED PIERS.
19. REMOVE AND REPLACE IN KIND EX 24" FW CARV VAULT AND PIPING TO SIDE OF NEW ROAD.
20. 30" PIPE THROUGH RETAINING WALL PER P342/TYP.
21. REMOVE AND REINSTALL STREET LIGHT, ELEC BOX, AND ELEC CONDUIT ADJACENT TO NEW XFMR PAD.
22. COVER ROLLER GATE WITH 1 LB ACOUSTIMAC SOUNDLOCK MASS LOADED VINYL OR EQUAL.
23. INSTALL ALUM AND POLYMER TUBING IN SINGLE 3" PVC CONTAINMENT PIPE

GENERAL NOTES:

1. SEE DWG G05 FOR GENERAL NOTES AND PIPELINE NOTES.
2. SEE DWG 25C12 FOR 24" ROP AND 8" SS PROFILES. DWG 25C13 FOR 30" BFW PROFILE. DWG 25C14 FOR 18" SD AND 24" FW PROFILES. AND P41 FOR 14" BRINE PROFILE.
3. ALL CHEMICAL PIPING SHALL BE DOUBLE CONTAINED PIPE PER PIPE SCHEDULE ON DWGS G18 & G19. INSTALL WITH 3' MIN COVER PER CP111 WITH CLSM BEDDING UNO.

KEY NOTES:

1. INSTALL SSMH PER C010/TYP.
2. INSTALL TYPE 1 CLEANOUTS PER CP411/TYP.
3. SEE STRUCTURAL DWGS FOR SLAB AND RETAINING WALL DETAILS. RETAINING WALL PER S286/TYP. STRUCTURAL SLAB PER S300/TYP. SEE ELECTRICAL DWGS FOR EQUIPMENT DETAILS.
4. MOUNT POLYMER PIPE ON SIDE OF BASIN. SEE DWG 25C19 PHOTOS #1 AND #2.
5. TERMINATE TEE INTO EX 3" ALUM AT EXISTING CHEMICAL INJECTION PORT. SEE DWG 25C19 PHOTOS #3 AND #4.
6. PROVIDE RESTRAINED COUPLING ADAPTORS AND FITTINGS AS REQUIRED TO CONNECT TO EXISTING 24" FW AT 2 LOCATIONS.
7. SEE DWG 25M01 FOR CARTRIDGE FILTERS AND CONTINUATION OF BFW AND ROP PIPE.
8. APPROXIMATELY 250 LF OF EXISTING 12" WATER PIPELINE TO BE REPAIRED IN PLACE USING CIPP LINER PER SPECIFICATION 02700. CCTV AND CLEANING OF WATER LINE TO REMOVE TUBERCULATION IS REQUIRED BEFORE LINER IS INSTALLED. ACCESS TO THE PIPE IS FROM THE WTP AND FROM TERRANOVA DRIVE. THERE ARE EX VALVES LOCATED AT EITHER END OF THE SECTION TO BE LINED. SEE DETAIL 2/-.
9. CONTRACTOR MAY REMOVE EX 20" RAW W IF REQUIRED FOR CONSTRUCTION. REMOVE PIPE TO NEAREST JOINT AND CAP PIPE TO REMAIN.
10. FIELD VERIFY EX 12" FW PIPE DIMENSIONS AND LOCATION IN ADVANCE OF CONSTRUCTION. TEMPORARY PIPING SHALL BE PROVIDED TO MAINTAIN SERVICE NORTH OF THE EXISTING VALVE AT THE CIPP PIT. INSTALL NEW 12" FW LINE AND CONNECT TO EX 12" FW LINE IN TWO LOCATIONS PER DETAIL CP257 AND CP111.
11. INSTALL 12"X14" WYE ADAPTORS AND FITTINGS TO PROVIDE A RESTRAINED CONNECTION BETWEEN THE 12" STL AND 14" PVC PIPES.
12. ABANDON EXISTING FLOW METER AND 6'X6' VAULT IN PLACE. FILL EXISTING VAULT WITH CLSM. CONSTRUCT NEW CONC SLAB PER S300/TYP ON TOP OF CLSM. MATCH GRADE OF ADJACENT SLABS.

Call before you Dig
Avoid cutting underground utility lines. It's costly.
Call 811

KEY MAP

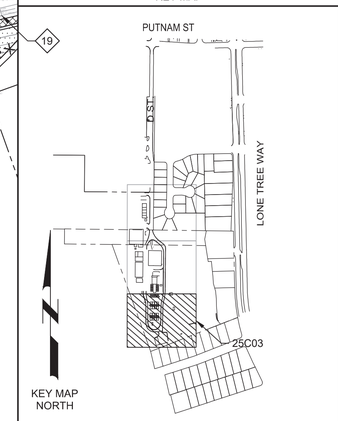

REV	DATE	BY	DESCRIPTION
1	11-4-2020	MMB	REVISED PER ADDENDUM #3

DESIGNED JES
DRAWN ART
CHECKED JM
DATE SEPTEMBER 2020

Digitally signed by Jill E. Shankel
Contact Info: Carollo Engineers, Inc.
Date: 2020.11.04

REGISTERED PROFESSIONAL ENGINEER JILL E. SHANKEL No. 54604 CIVIL STATE OF CALIFORNIA

carollo

ANTIOCH CALIFORNIA OPPORTUNITY LIVES·HERE

CITY OF ANTIOCH
ANTIOCH BRACKISH WATER DESALINATION PROJECT
CIVIL
WATER TREATMENT PLANT YARD PIPING - 3

VERIFY SCALES
BAR IS ONE INCH ON ORIGINAL DRAWING
0 1"
IF NOT ONE INCH ON THIS SHEET, ADJUST SCALES ACCORDINGLY

JOB NO. 10024A.10
DRAWING NO. 25C03
SHEET NO. 101 OF 498

FILE NAME: 10024A1025C03.dwg
PROJECT NO. 10024A10
LAST SAVED BY: atucker

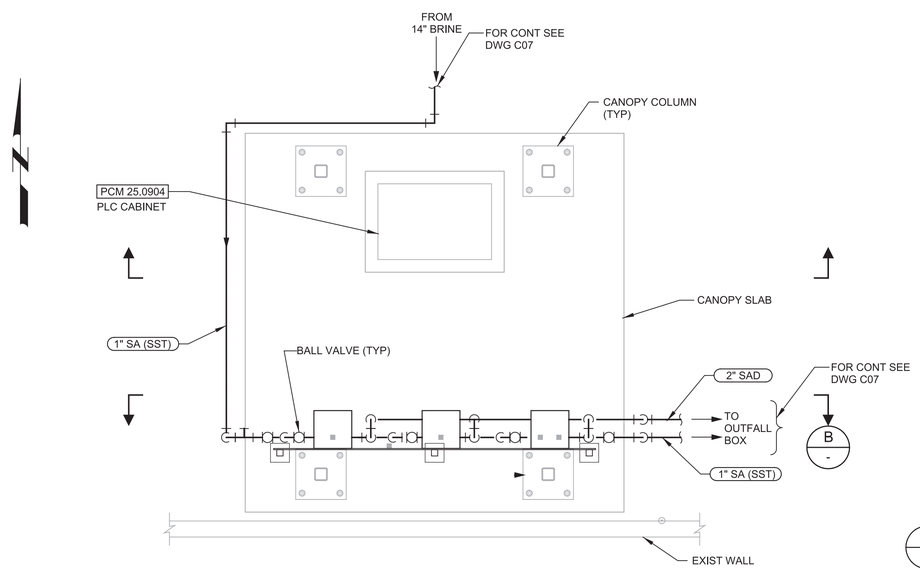

A 25C07 DETAIL
SCALE: 1/2"=1'-0"
FILE: 10024A1025C110

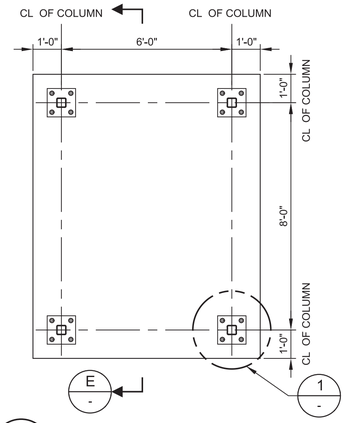

C CANOPY FLOOR PLAN
SCALE: 3/8"=1'-0"
FILE: 10024A1025S106

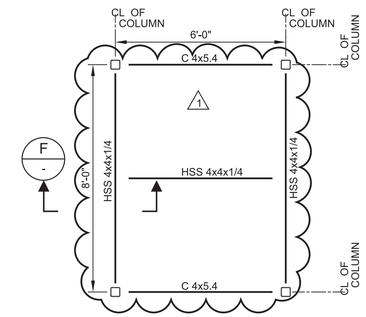

D CANOPY ROOF FRAMING PLAN
SCALE: 3/8"=1'-0"
FILE: 10024A1025S106

GENERAL NOTES:

1. FOR GENERAL STRUCTURAL NOTES, SEE DRAWING G10. SEE DRAWING G05 FOR GENERAL NOTES AND PIPELINE NOTES.
2. STRUCTURE SEISMIC RISK CATEGORY IS III RESPONSE MODIFICATION FACTOR PER ASCE 7-16, R=1.0.
3. COORDINATE PAD LOCATIONS, WALL AND FLOOR PENETRATIONS WITH EQUIPMENT MANUFACTURER.
4. UNLESS OTHERWISE SPECIFIED, MINIMUM DISTANCE IS 8" FOR ANCHORS.
5. PIPE PENETRATIONS PER MECHANICAL USING S180/TYP.
6. FOR SUBGRADE PREPARATION REFER TO F101/TYP.
7. NOTE ALL BOLTS AND STEEL FRAMING TO BE HOT DIP GALVANIZED.

KEY NOTES:

1. CONTRACTOR TO DESIGN SAMPLE PANEL AND SUPPORTS.
2. ANCHOR SUPP REINF NOT SHOWN FOR CLARIFY.

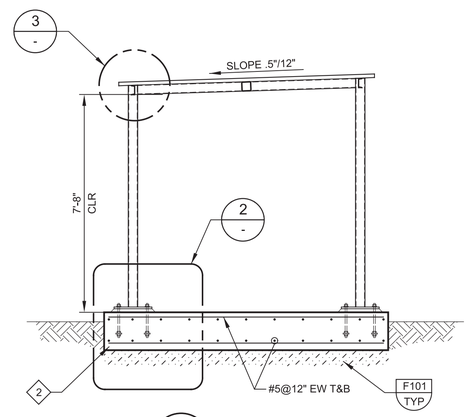

E - SECTION
SCALE: 3/8"=1'-0"
FILE: 10024A1025S106

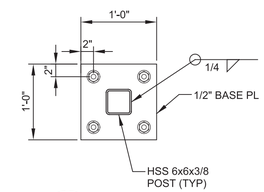

1 - DETAIL
SCALE: 1"=1'-0"
FILE: 10024A1025S106

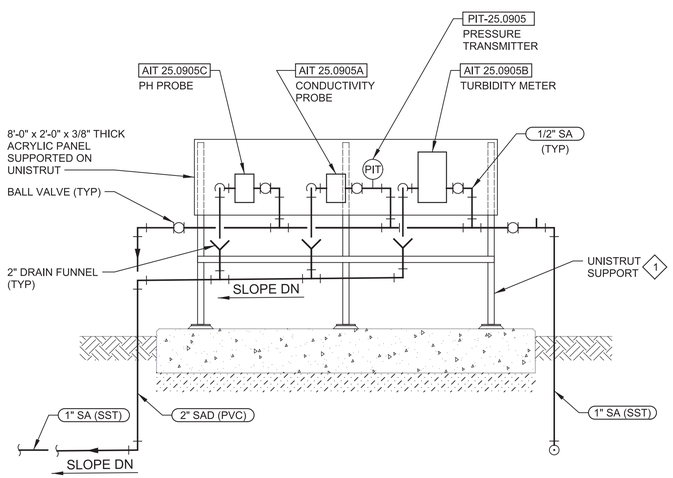

B - SECTION
SCALE: 1/2"=1'-0"
FILE: 10024A1025C303

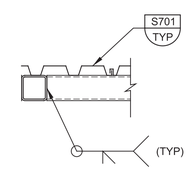

F - DETAIL
SCALE: 1"=1'-0"
FILE: 10024A1025S106

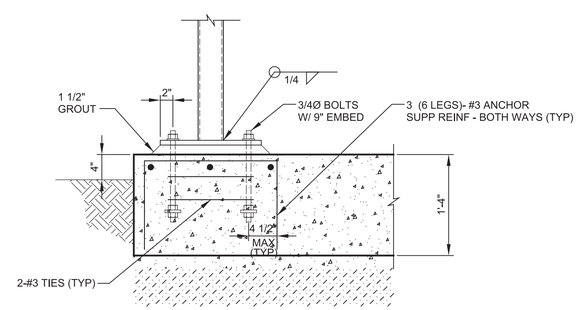

2 - DETAIL
SCALE: 1"=1'-0"
FILE: 10024A1025S106

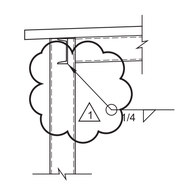

3 - DETAIL
SCALE: 1"=1'-0"
FILE: 10024A1025S106

REV	DATE	BY	DESCRIPTION
1	11-04-20	KP	REVISED PER ADDENDUM NO. 3

DESIGNED SCW
DRAWN RBS
CHECKED JM
DATE SEPTEMBER 2020

Digitally signed by Scott C. Weddle
Contact Info: Carollo Engineers, Inc.
Date: 2020.11.04 17:06:45-08'00'

REGISTERED PROFESSIONAL ENGINEER SCOTT CLARK WEDDLE No. 49851 CIVIL STATE OF CALIFORNIA

carollo

ANTIOCH CALIFORNIA OPPORTUNITY LIVES•HERE

CITY OF ANTIOCH
ANTIOCH BRACKISH WATER DESALINATION PROJECT
CIVIL
DELTA DIABLO BRINE ANALYZER AND PLC CANOPY

VERIFY SCALES
BAR IS ONE INCH ON ORIGINAL DRAWING
0 1"
IF NOT ONE INCH ON THIS SHEET, ADJUST SCALES ACCORDINGLY

JOB NO. 10024A.10
DRAWING NO. 25C08
SHEET NO. 106 OF 498

Plot Date: 04-NOV-2020 1:46:36 PM
User: svcPW
PlotScale: 1:1
DesignScript: Carollo_Std_Pen_v0905.pen
ColorTable: gshade.ctb
Model: Layout1
LAST SAVED BY: tumadhay

KEY TAGS:

1	V21.0602A	30" BFV 510
2	V21.0602B	30" BFV 510
3	V21.0602C	30" BFV 510
4	V21.0602H	12" BFV 510
5	V21.0602E	12" BFV 510
6	V21.0602D	12" BFV 510
7	V21.0602F	12" BFV 510
8	V21.0602G	12" BFV 510
9	RW-CARV-1	2" CARV 910
10	RW-CARV-2	2" CARV 910

GENERAL NOTES:

1. SEE DWG G05 FOR GENERAL NOTES AND PIPELINE NOTES.
2. SEE 25C03 FOR PIPE ALIGNMENT ON PLANS.

KEY NOTES:

1. PLACE 2'X10" CONC SLAB AGAINST SEDIMENTATION TANK WALL.
2. ROUTE NEW 12" RW PIPE ADJACENT TO WALL OF SEDIMENTATION BASIN.
3. INSTALL INSULATING FLANGE BETWEEN DISSIMILAR METALS.
4. PROVIDE MINIMUM STRAIGHT PIPE LENGTH UPSTREAM AND DOWNNSTREAM OF FLOWMETER AS RECOMMENDED BY FLOWMETER MANUFACTURER.
5. ROUTE 1" SST DRAIN PIPE ALONG SED BASIN WALL TO SLUDGE PUMP WET WELL.

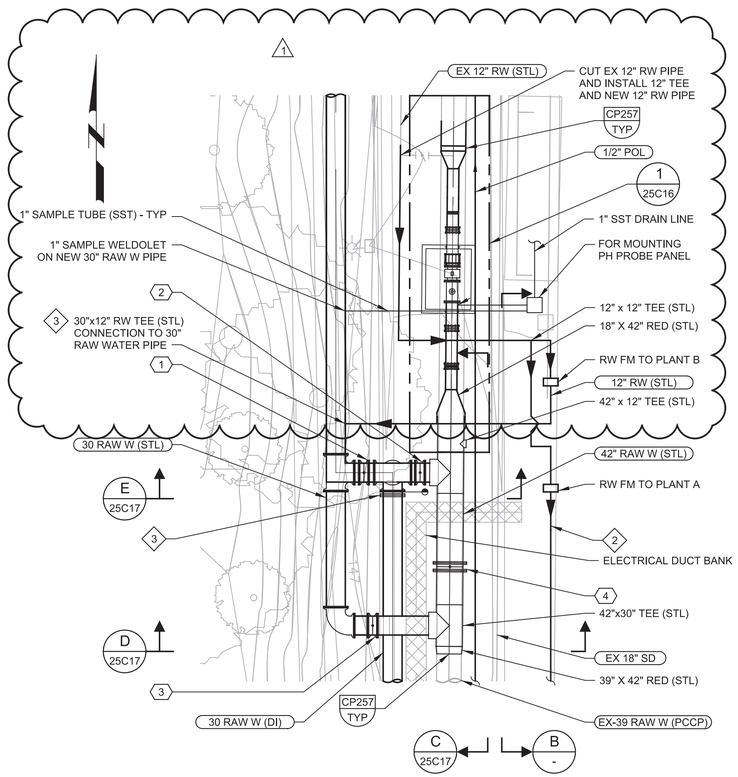

A 25C03 ENLARGED PLAN

SCALE: 1"=10'
FILE: 10024A1025C102

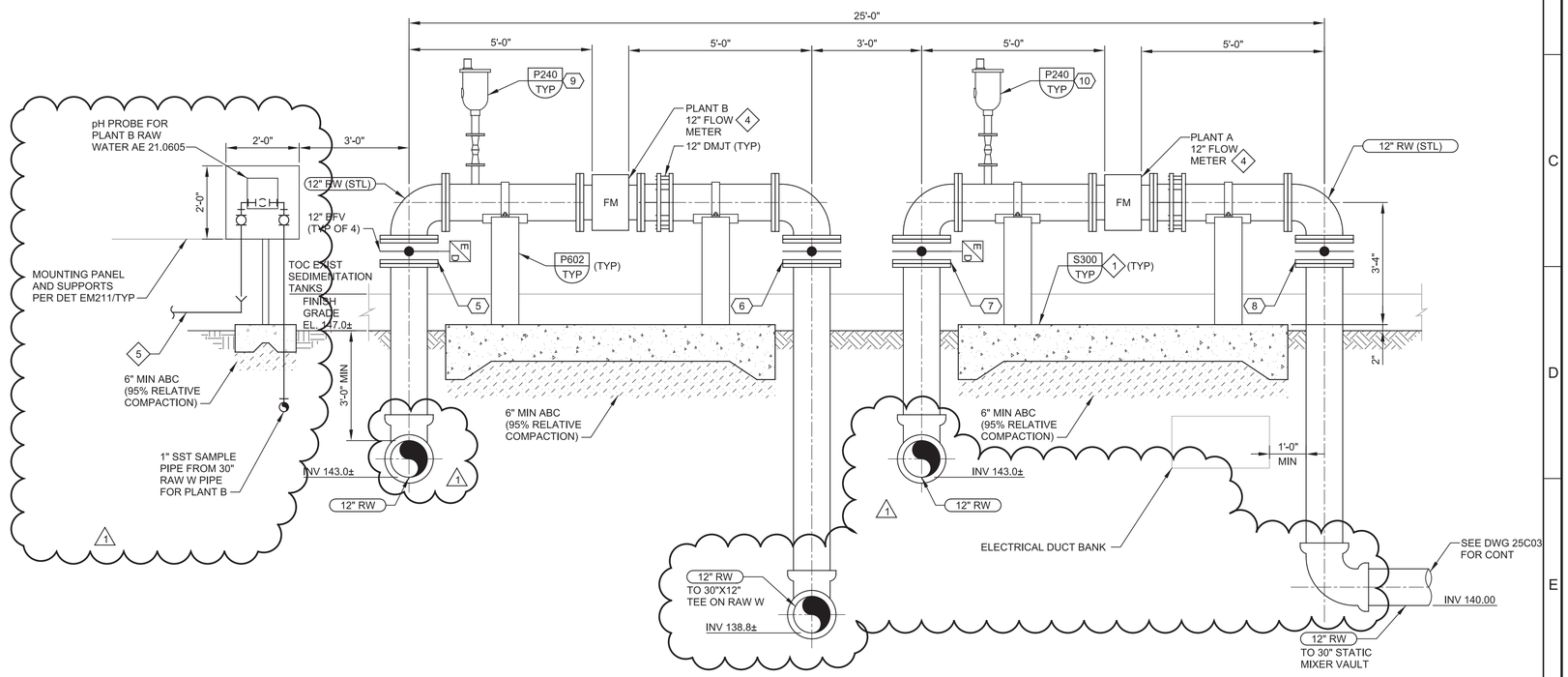

B - SECTION

SCALE: 1/2"=1'-0"
FILE: 10024A1025M309

REV	DATE	BY	DESCRIPTION
1	11-04-20	JES	REVISED PER ADDENDUM NO. 3

DESIGNED JES
DRAWN ART
CHECKED JM
DATE SEPTEMBER 2020

Digitally signed by Jill E. Shankel
Contact Info: Carollo Engineers, Inc.
Date: 2020.11.04

REGISTERED PROFESSIONAL ENGINEER JILL E. SHANKEL No. 54604 CIVIL STATE OF CALIFORNIA

carollo

ANTIOCH CALIFORNIA OPPORTUNITY LIVES·HERE

CITY OF ANTIOCH
ANTIOCH BRACKISH WATER DESALINATION PROJECT
CIVIL
WATER TREATMENT PLANT YARD
PIPING DETAILS - 1

VERIFY SCALES
BAR IS ONE INCH ON ORIGINAL DRAWING
0 1"
IF NOT ONE INCH ON THIS SHEET, ADJUST SCALES ACCORDINGLY

JOB NO. 10024A.10
DRAWING NO. 25C15
SHEET NO. 113 OF 498

PROJECT NO. 10024A10 FILE NAME: 10024A1025C15.dgn

Plot Date: 04-NOV-2020 1:15:33 PM
User: svcPW
PlotScale: 1:1
DesignScript: Carollo_Std_Pen_v0905.pen
ColorTable: gshade.ctb
Model: Layout1
LAST SAVED BY: gleal

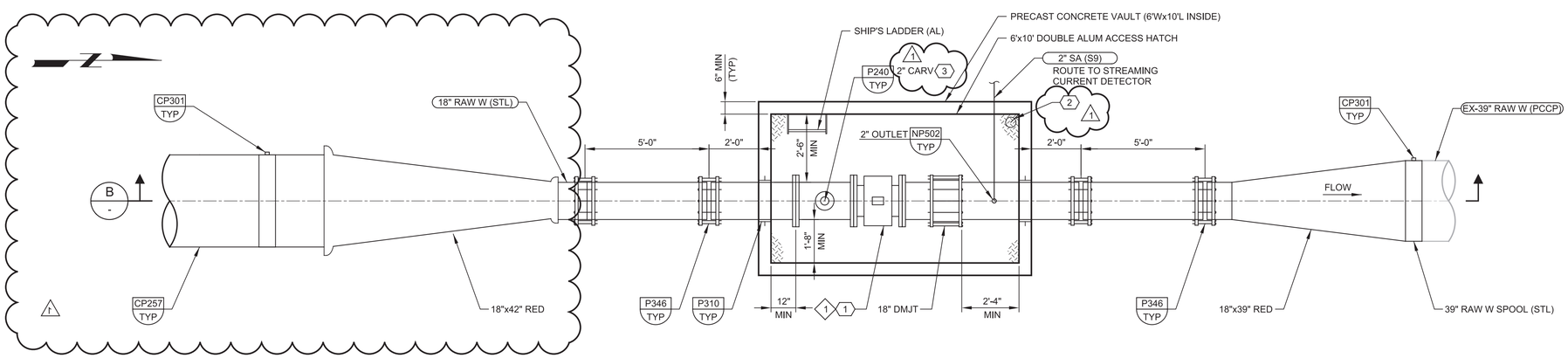

1 FLOW METER VAULT PLAN

25C15

SCALE: 3/8"=1-0'
FILE: 10024A1025M101

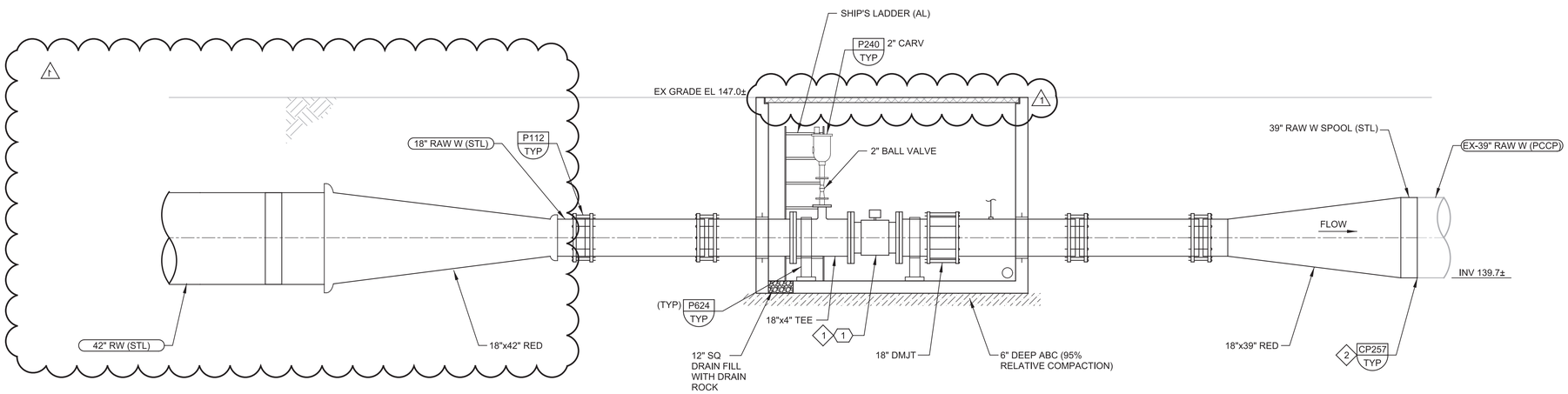

B SECTION

-

SCALE: 3/8"=1-0'
FILE: 10024A1025M309A

GENERAL NOTES:

1. SEE DWG G05 FOR GENERAL NOTES AND PIPELINE NOTES.
2. SEE 25C03 FOR PIPE ALIGNMENT ON PLANS.

KEY NOTES:

1. PROVIDE MINIMUM STRAIGHT PIPE LENGTH UPSTREAM AND DOWNSTREAM OF FLOWMETER AS RECOMMENDED BY FLOWMETER MANUFACTURER.
2. FIELD VERIFY DIMENSIONS OF 39" RAW W PIPE PRIOR TO FABRICATION OF BUTT STRAP AND SHIMS.

KEY TAGS:

1	FE/FIT-21-0603	30" MAGMETER
2	LE-21.0608	FLOAT SWITCH
3	RWW-CARV-13	2" CARV 910

REV	DATE	BY	DESCRIPTION
1	11-04-20	JES	REVISED PER ADDENDUM NO. 3

DESIGNED JES
DRAWN ART
CHECKED JM
DATE SEPTEMBER 2020

Digitally signed by Jill E. Shankel
Contact Info: Carollo Engineers, Inc.
Date: 2020.11.04

REGISTERED PROFESSIONAL ENGINEER JILL E. SHANKEL No. 54604 CIVIL STATE OF CALIFORNIA

carollo

ANTIOCH CALIFORNIA OPPORTUNITY LIVES·HERE

CITY OF ANTIOCH

ANTIOCH BRACKISH WATER DESALINATION PROJECT

CIVIL

WATER TREATMENT PLANT YARD
PIPING DETAILS - 2

VERIFY SCALES
BAR IS ONE INCH ON ORIGINAL DRAWING
0 1"
IF NOT ONE INCH ON THIS SHEET, ADJUST SCALES ACCORDINGLY

JOB NO. 10024A.10
DRAWING NO. 25C16
SHEET NO. 114 OF 498

PROJECT NO. 10024A10 FILE NAME: 10024A1025C16.dgn

Plot Date: 04-NOV-2020 4:20:32 PM
User: svcPW
Model: Layout1 ColorTable: gshade.ctb DesignScript: Carollo_Std_Pen_v0905.pen PlotScale: 1:1
LAST SAVED BY: gleal

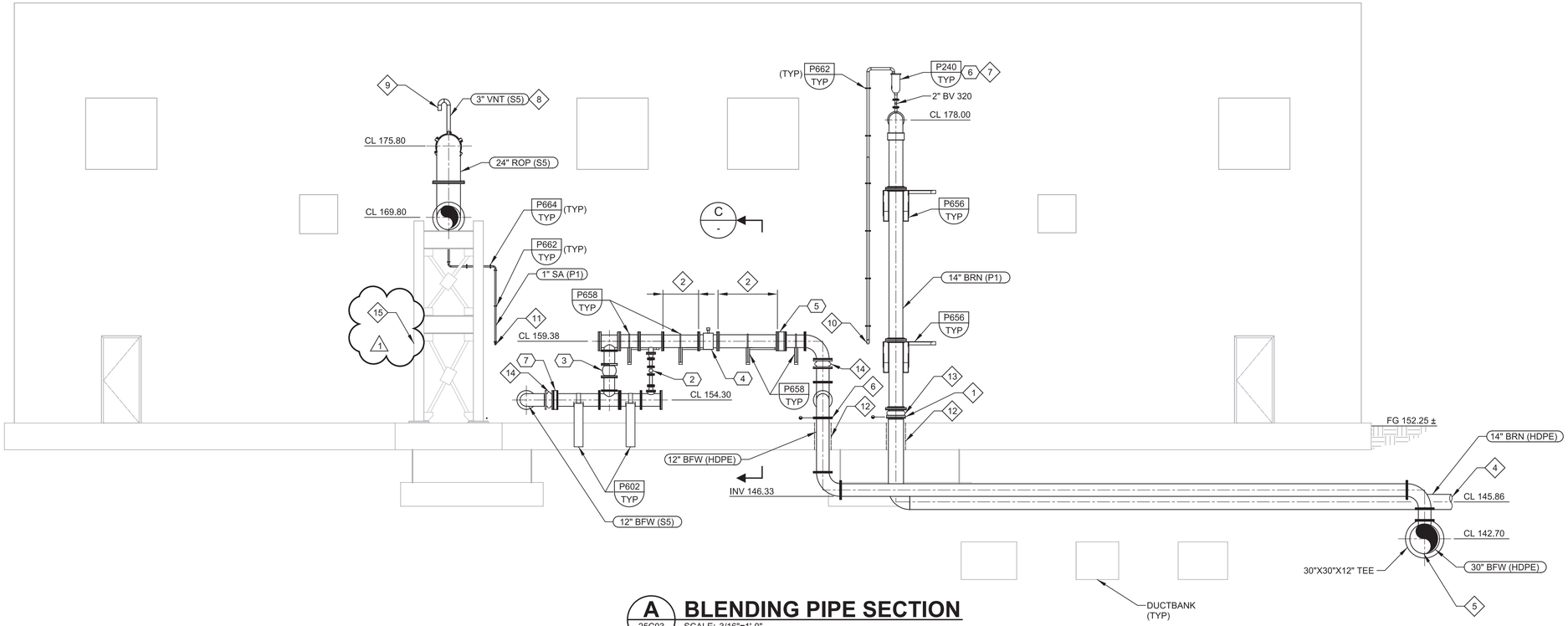

A 25C03 BLENDING PIPE SECTION

SCALE: 3/16"=1'-0"
FILE: 10024A1025M0308

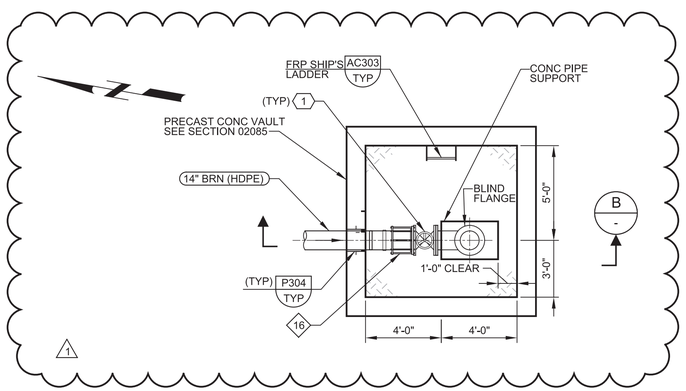

1 25C03 PORTABLE PIG LAUNCHER VAULT

SCALE: 1/4"=1'-0"
FILE: 10024A1025M305

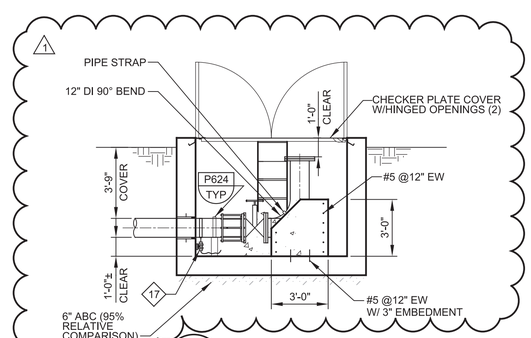

B - SECTION

SCALE: 1/4"=1'-0"
FILE: 10024A1025M305

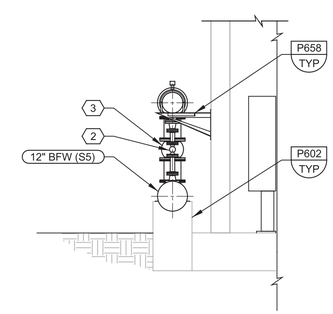

C - SECTION

SCALE: 1/4"=1'-0"
FILE: 10024A1025M308B

GENERAL NOTES:

1. SEE DWG G05 FOR GENERAL NOTES AND PIPELINE NOTES.
2. SEE 25C02 AND 25C03 FOR PIPE ALIGNMENT ON PLANS.

KEY NOTES:

1. PROVIDE FLANGES BACKING RING, GASKET AND ADAPTORS AS REQUIRED FOR RESTRAINED TRANSITION 6" ABOVE GRADE FROM 12" PVC TO 14" HDPE PIPE.
2. STRAIGHT DISTANCE UPSTREAM AND DOWNSTREAM OF FLOWMETER SHALL MEET MANUFACTURER'S RECOMMENDATIONS.
3. 1" 316 SS DRAIN NIPPLE WITH TAPPING SADDLE AND 1" 316 SS BALL VALVE AND HOSE CONNECTION.
4. SEE DWG P43 FOR CONTINUATION OF 14" BRN.
5. SEE DWG 25C03 FOR CONTINUATION OF 30" BFW.
6. PROVIDE FLANGES BACKING RING, GASKET AND ADAPTORS AS REQUIRED FOR RESTRAINED TRANSITION 6" ABOVE GRADE FROM 12" 316L SST SCHEDULE 40S TO 12" HDPE.
7. 2" THERMOPLASTIC AIR/VACUUM RELEASE VALVE, CARV 914.
8. TOP OF VENT/GOOSENECK TO BE 4-FT ABOVE TOP OF ROP PIPELINE.
9. COVER VENT OUTLET WITH 316L SST #24 MESH SCREEN.
10. ROUTE DRAIN/VENT PIPE FROM CARV THROUGH EXTERIOR WALL PER P304/TYP. ROUTE PIPE TO NEAREST DRAIN WITH AIR GAP EQUAL TO TWICE THE PIPE DIAMETER. COVER PIPE OUTLET WITH 316L SST #24 MESH SCREEN.
11. ROUTE SAMPLE PIPE THROUGH EXTERIOR WALL PER P304/TYP. ROUTE PIPE TO THE RO BRINE/PERMEATE INSTRUMENT/SAMPLE PANEL.
12. HOT DIPPED GALVANIZED SCHEDULE 40 SLEEVE.
13. EXPANSION JOINT BY REDFLEX MODEL J-10, OR EQUAL. MANUFACTURER TO VERIFY THAT ELASTOMER MATERIAL IS COMPATIBLE WITH RO BRINE. 316L SST BOLTS, CONTROL RODS, AND RETAINING RINGS. 75 PSIG PRESSURE RATING. FILLED ARCH. PROVIDE ADAPTER FLANGES AS NECESSARY TO CONNECT THE 14" BRN (P1) PIPE TO THE 14" BRN (HDPE) PIPE.
14. EXPANSION JOINT BY REDFLEX MODEL J-1W, OR EQUAL. MANUFACTURER TO VERIFY THAT ELASTOMER MATERIAL IS COMPATIBLE WITH BRACKISH FILTERED WATER. 316L SST BOLTS, CONTROL RODS, AND RETAINING RINGS. PROVIDE ADAPTER FLANGES AS NECESSARY. NSF 61 CERTIFIED.
15. REFER TO DRAWINGS 25S09 AND 25S10 FOR STRUCTURAL DETAILS.
16. CONNECT GATE VALVE TO HDPE PIPE USING BUTT FUSION OF A POLYCAM SERIES 908 (OR EQUAL) ID CONTROLLED MJ ADAPTOR WITH A 12" MEGALUG. 1
17. 1" 316 SS DRAIN NIPPLE WITH SS TAPPING SADDLE AND 1" 316 SS BALL VALVE AND HOSE CONNECTION.

KEY TAGS:

1	VAL 25.0904E	12" GV 100
2	VAL-26-0301A	2-1/2" VBV 350
3	VAL-26-0301B	10" VBV 350
4	FE-26-0301A	12" MAG METER
5	VAL 26.0301J	12" BFV 521
6	BRN-CARV-31	2" CARV 914
7	VAL 26.0301H	12" BFV 521
8	LE-21.0908	FLOAT SWITCH

REV	DATE	BY	DESCRIPTION
1	11-04-20	KP	REVISED PER ADDENDUM NO. 3

DESIGNED JES
DRAWN RBS
CHECKED JM
DATE SEPTEMBER 2020

Digitally signed by Jill E. Shankel
Contact Info: Carollo Engineers, Inc.
Date: 2020.11.04

REGISTERED PROFESSIONAL ENGINEER JILL E. SHANKEL No. 54604 CIVIL STATE OF CALIFORNIA

carollo

ANTIOCH CALIFORNIA OPPORTUNITY LIVES·HERE

CITY OF ANTIOCH
ANTIOCH BRACKISH WATER DESALINATION PROJECT
CIVIL
WATER TREATMENT PLANT YARD
PIPING DETAILS - 4

VERIFY SCALES
BAR IS ONE INCH ON ORIGINAL DRAWING
0 1"
IF NOT ONE INCH ON THIS SHEET, ADJUST SCALES ACCORDINGLY

JOB NO. 10024A.10
DRAWING NO. 25C18
SHEET NO. 116 OF 498

User: svcPW Plot Date: 03-NOV-2020 10:45:18 AM PlotScale: 1:1 DesignScript: Carollo_Std_Pen_v0905.pen ColorTable: gshade.ctb Model: Layout1 LAST SAVED BY: gleal

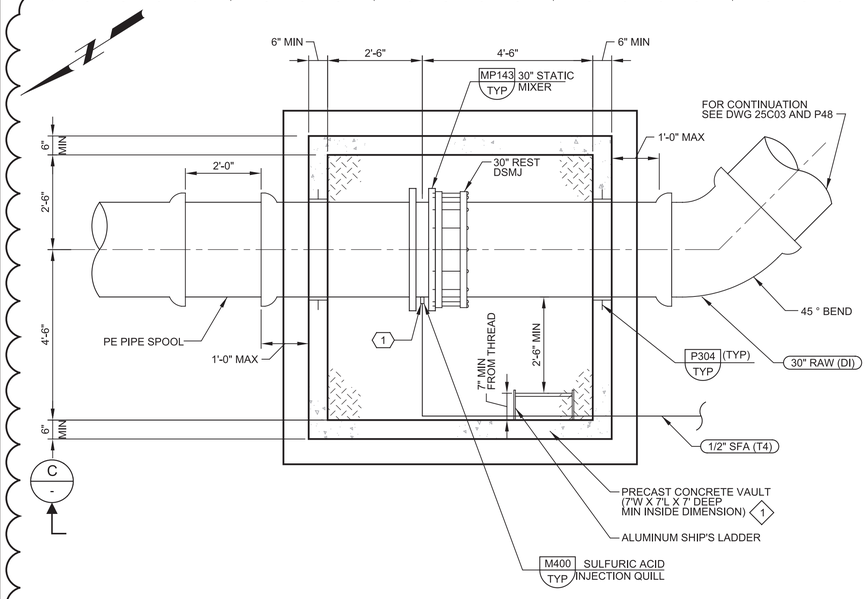

1 30" STATIC MIXER VAULT PLAN

25C03 SCALE: 1/2"=1'-0"
FILE: 10024A1025M104

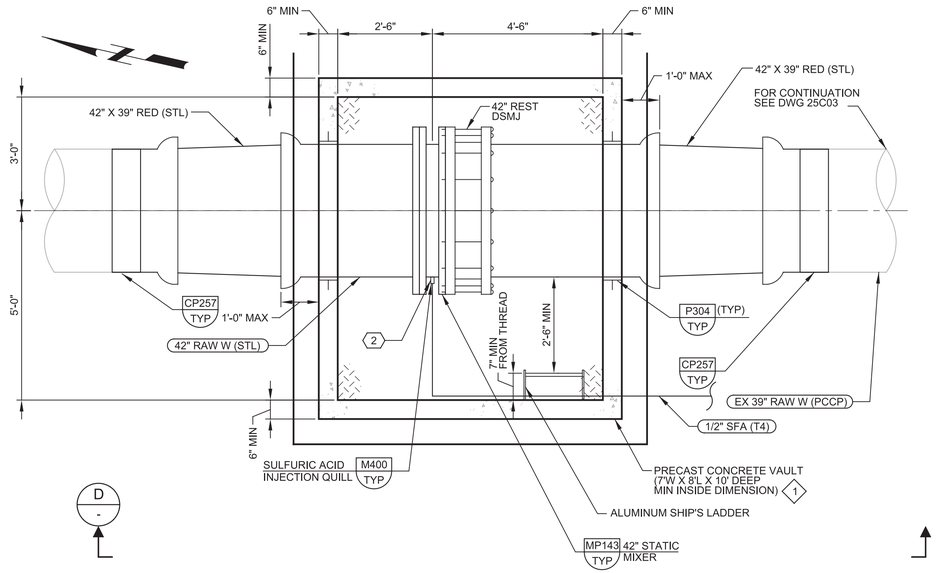

2 42" STATIC MIXER VAULT PLAN

25C03 SCALE: 1/2"=1'-0"
FILE: 10024A1025M104

GENERAL NOTES:

1. SEE DRAWING G03 FOR GENERAL NOTES AND PIPELINE NOTES.

KEY NOTES:

1. PRECAST CONCRETE VAULT PER SECTION 02085 WITH CAST IN PLACE SLAB AND H-20 ACCESS HATCH PER SECTION 08320.
2. FILL OPENING WITH NON-SHRINK GROUT PER SECTION 03600.

KEY TAGS:

1 SMX-21.0601B 30" STATIC MIXER (FLGXFLG)
2 SMX-21.0601A 42" STATIC MIXER (FLGXFLG) 1

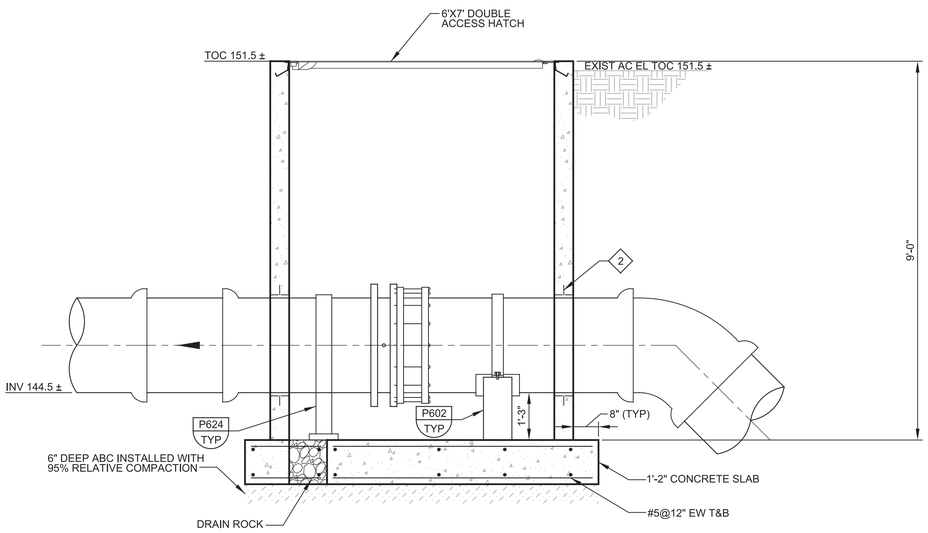

C 30" STATIC MIXER VAULT SECTION

- SCALE: 1/2"=1'-0"
FILE: 10024A1025M304

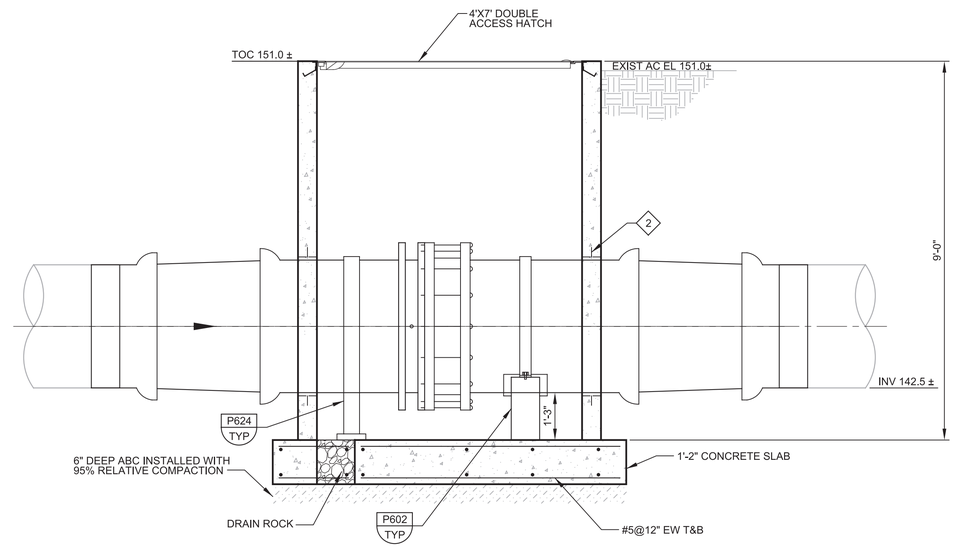

D 42" STATIC MIXER VAULT SECTION

- SCALE: 1/2"=1'-0"
FILE: 10024A1025M304

1

REV	DATE	BY	DESCRIPTION
1	11-04-20	JES	REVISED PER ADDENDUM NO. 3

DESIGNED JES
DRAWN GL
CHECKED JM
DATE SEPTEMBER 2020

Digitally signed by Jill E. Shankel
Contact Info: Carollo Engineers, Inc.
Date: 2020.11.04

REGISTERED PROFESSIONAL ENGINEER JILL E. SHANKEL No. 54604 CIVIL STATE OF CALIFORNIA

carollo

ANTIOCH CALIFORNIA OPPORTUNITY LIVES·HERE

CITY OF ANTIOCH
ANTIOCH BRACKISH WATER DESALINATION PROJECT
CIVIL
STATIC MIXER VAULTS 1

VERIFY SCALES
BAR IS ONE INCH ON ORIGINAL DRAWING
0 1"
IF NOT ONE INCH ON THIS SHEET, ADJUST SCALES ACCORDINGLY

JOB NO. 10024A.10
DRAWING NO. 25C18A
SHEET NO. 116A OF 498

PROJECT NO. 10024A10 FILE NAME: 10024A1025C18A.dgn

Plot Date: 04-NOV-2020 12:41:02 PM
User: svcPW
Model: Layout1 ColorTable: gshade.ctb DesignScript: Carollo_Std_Pen_v0905.pen PlotScale: 1:1
LAST SAVED BY: gleal

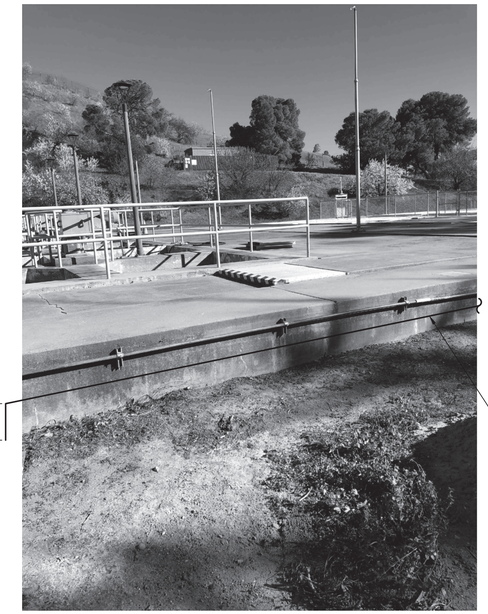

1 PHOTO 1 - SEDIMENTATION BASIN WALL LOOKING EAST

25C03 SCALE: NO SCALE
FILE: -

2 PHOTO 2 - FILTER WALL LOOKING NORTH EAST

25C03 SCALE: NO SCALE
FILE: -

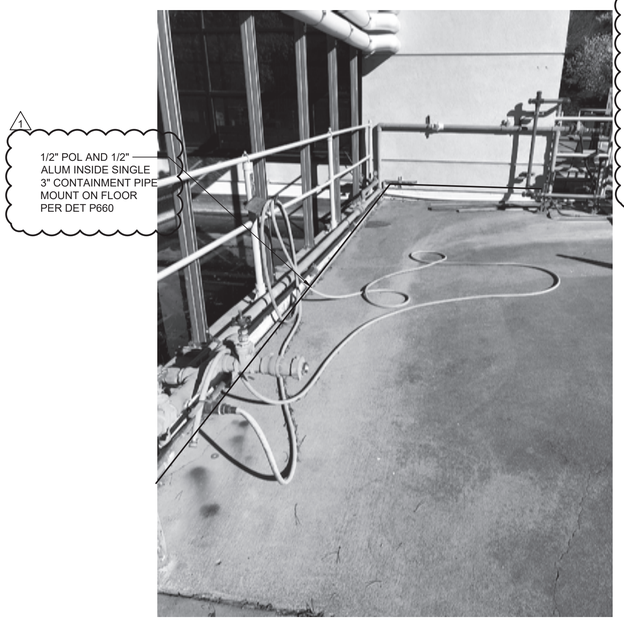

3 PHOTO 3

25C03 SCALE: NO SCALE
FILE: -

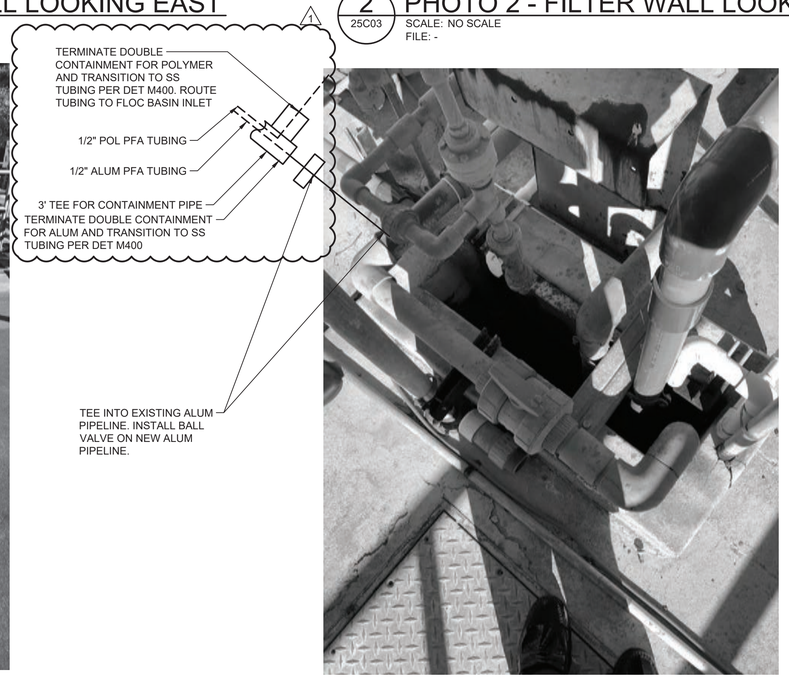

4 PHOTO 4

25C03 SCALE: NO SCALE
FILE: -

GENERAL NOTES:

1. SEE DWG G05 FOR GENERAL NOTES AND PIPELINE NOTES.
2. SEE DWG 25C03 FOR 3" ALUM PIPE CONTINUATION.

Call before you Dig
Avoid cutting underground utility lines. It's costly.
Call 811

REV	DATE	BY	DESCRIPTION
1	11-4-2020	MMB	REVISED PER ADDENDUM #3

DESIGNED JES
DRAWN ART
CHECKED JM
DATE SEPTEMBER 2020

Digitally signed by Scott C. Weddle
DN: cn=Scott C. Weddle, o=Carollo Engineers, Inc.
Date: 2020.11.04 17:08:01-08'00'

REGISTERED PROFESSIONAL ENGINEER SCOTT CLARK WEDDLE No. 49851 CIVIL STATE OF CALIFORNIA

carollo

ANTIOCH CALIFORNIA OPPORTUNITY LIVES•HERE

CITY OF ANTIOCH
ANTIOCH BRACKISH WATER DESALINATION PROJECT
CIVIL
WATER TREATMENT PLANT YARD PIPING
3" SA DETAIL PHOTOS

VERIFY SCALES
BAR IS ONE INCH ON ORIGINAL DRAWING
0 1"
IF NOT ONE INCH ON THIS SHEET, ADJUST SCALES ACCORDINGLY

JOB NO. 10024A.10
DRAWING NO. 25C19
SHEET NO. 117 OF 498

Plot Date: 11/3/2020 11:56:57 AM
FILE NAME: 10024A1025C19.dwg
PROJECT NO. 10024A10
LAST SAVED BY: atucker

2019 CALIFORNIA BUILDING CODE, TITLE 24, PART 2, VOL.1 & 2

ROOM NO.	ROOM NAME	OCCUPANCY	CONSTRUCTION TYPE	BASIC ALLOW STORIES/HEIGHT	ACTUAL SQ FT	BASIC ALLOWABLE AREA	ALLOWABLE FLOOR AREA PER OCCUP	OCCUPANCY LOAD	EXITS REQUIRED/ PROVIDED	SPRINKLERED	OCCUPANCY SEPARATION	ADA	COMMENTS:
RIVER PUMP STATION - DRAWING 10024A1021A01													
101	PUMP ROOM	F-1	II-B	2 STORIES/55 FT	2,248	15,500	300	8	1/1	NR	NR	* NR	-
102	HIGH VOLTAGE ELECTRICAL ROOM	F-1	II-B	2 STORIES/55 FT	827	15,500	300	3	2/2	NR	NR	* NR	-
103	RESTROOM	B	II-B	3 STORIES/55 FT	54	23,000	100	1	1/1	NR	NR	R	-
104	LOW VOLTAGE ELECTRICAL ROOM	F-1	II-B	2 STORIES/55 FT	145	15,500	300	1	2/2	NR	NR	* NR	-
	BUILDING ACTUAL	F-1	II-B	2 STORIES/55 FT	3,274	15,500							
RO BUILDING - DRAWING 10024A1025A01													
101	PROCESS AREA	F-1	II-B	2 STORIES/55 FT	11,864	15,500	300	40	2/4	NR	NR	* NR	-
102	ELECTRICAL ROOM	F-1	II-B	2 STORIES/55 FT	1,340	15,500	300	5	2/2	NR	NR	* NR	-
201	EQUIPMENT PLATFORM	F-1	II-B	2 STORIES/55 FT	1,340	15,500	300	5	1/1	NR	NR	* NR	-
	BUILDING ACTUAL	F-1	II-B	2 STORIES/55 FT	14,544	15,500							

* MACHINERY SPACES VISITED ONLY BY SERVICE PERSONNEL FOR MAINTENANCE, REPAIR OR OCCASIONAL MONITORING OF EQUIPMENT SHALL NOT BE REQUIRED TO COMPLY WITH ADA ACCESSIBILITY (2010 ADA STANDARDS, 203.5).

2019 CALIFORNIA ENERGY CONSERVATION CODE

BUILDING ENVELOPE REQUIREMENTS - CONTRA COSTA COUNTY, CLIMATE ZONE 12

ENVELOPE COMPONENT	U - VALUE REQUIRED	U - VALUE PROVIDED
ROOFS	U - 0.034	U - 0.034
WALLS ABOVE GRADE, MASS LIGHT	U - 0.170	U - 0.170
SLAB ON GRADE FLOORS	U - 0.071	U - 0.071
RAISED FLOORS	U - 0.092	U - 0.092
AIR BARRIER	REQ	REQ
DOORS - SWINGING	U - 0.70	U - 0.70
DOORS - NONSWINGING	U - 1.45	U - 1.45
FIXED FENESTRATION	U - 0.36	U - 0.36
OPERABLE FENESTRATION	U - 0.46	U - 0.46
SKYLIGHTS - PLASTIC DOME	U - 0.88	U - 0.88

TABLE 140.3-B, CHAPTER 5, 2019 CALIFORNIA ENERGY CODE, TITLE 24

DOOR & HARDWARE SCHEDULE

DOOR NO.	DOOR WIDTH	DOOR HEIGHT	DOOR THICK	DOOR MAT'L	DOOR FINISH	DOOR STYLE (AJ103 TYP)	FRAME WIDTH	FRAME HEIGHT	FRAME DEPTH	FRAME TYPE (AJ103 TYP)	FRAME MAT'L	FRAME FINISH	DETAILS HEAD (AJ105 TYP)	DETAILS JAMB (AJ107 TYP)	DETAILS SILL (AJ109 TYP)	HW GROUP	UL LABEL	CARD READER	REMARKS
RIVER PUMP STATION - DRAWING 10024A1021A01																			
101-1	3'-0"	7'-2"	1 3/4"	STEEL	COATING	F	3'-4"	7'-4"	6"	R	STEEL	COATING	C	C	E	HW 1	NR	NR	-
101-2	8'-0"	10'-0"	3/4"	STEEL	FACT FIN	C	-	-	-	-	STEEL	FACT FIN	AJ123/TYP	AJ123/TYP	AJ123/TYP	-	NR	-	-
102-1	8'-0"	10'-0"	3/4"	STEEL	FACT FIN	C	-	-	-	-	STEEL	FACT FIN	AJ123/TYP	AJ123/TYP	AJ123/TYP	-	NR	-	-
102-2	3'-0"	7'-2"	1 3/4"	STEEL	COATING	F	3'-4"	7'-4"	6"	R	STEEL	COATING	C	C	E	HW 2	2-HR	NR	-
102-3	3'-0"	7'-2"	1 3/4"	STEEL	COATING	F	3'-4"	7'-4"	6"	R	STEEL	COATING	C	C	B	HW 3	NR	NR	-
103-1	3'-0"	7'-2"	1 3/4"	STEEL	COATING	F	3'-4"	7'-4"	6"	R	STEEL	COATING	C	C	B	HW 4	NR	NR	-
104-1	3'-0"	7'-2"	1 3/4"	STEEL	COATING	F	3'-4"	7'-4"	6"	R	STEEL	COATING	C	C	B	HW 3	NR	NR	-
104-2	3'-0"	7'-2"	1 3/4"	STEEL	COATING	F	3'-4"	7'-4"	6"	R	STEEL	COATING	C	C	E	HW 2	2-HR	NR	-
RO BUILDING - DRAWING 10024A1025A01																			
101-1	3'-0"	7'-2"	1 3/4"	STEEL	COATING	G	3'-4"	7'-4"	6"	R	STEEL	COATING	C	C	E	HW 1	NR	NR	-
101-2	10'-0"	14'-0"	3/4"	STEEL	FACT FIN	C	-	-	-	-	STEEL	FACT FIN	AJ123/TYP	AJ123/TYP	AJ123/TYP	-	NR	-	-
101-3	10'-0"	14'-0"	3/4"	STEEL	FACT FIN	C	-	-	-	-	STEEL	FACT FIN	AJ123/TYP	AJ123/TYP	AJ123/TYP	-	NR	-	-
101-4	10'-0"	14'-0"	3/4"	STEEL	FACT FIN	C	-	-	-	-	STEEL	FACT FIN	AJ123/TYP	AJ123/TYP	AJ123/TYP	-	NR	-	-
101-5	10'-0"	14'-0"	3/4"	STEEL	FACT FIN	C	-	-	-	-	STEEL	FACT FIN	AJ123/TYP	AJ123/TYP	AJ123/TYP	-	NR	-	-
101-6	PR 3'-2"	7'-2"	1 3/4"	STEEL	COATING	G	6'-8"	7'-4"	6"	R	STEEL	COATING	C	C	E	HW 1	NR	NR	-
101-7	3'-0"	7'-2"	1 3/4"	STEEL	COATING	G	3'-4"	7'-4"	6"	R	STEEL	COATING	C	C	E	HW 1	NR	NR	-
101-8	PR 3'-2"	7'-2"	1 3/4"	STEEL	COATING	G	6'-8"	7'-4"	6"	R	STEEL	COATING	C	C	E	HW 4	NR	NR	-
102-1	3'-0"	7'-2"	1 3/4"	STEEL	COATING	G	3'-4"	7'-4"	6"	R	STEEL	COATING	E	E	B	HW 2	NR	NR	-
102-2	PR 3'-2"	9'-2"	1 3/4"	STEEL	COATING	F	6'-8"	9'-4"	6"	R	STEEL	COATING	E	E	E	HW 3	NR	NR	-
102-3	PR 3'-2"	7'-2"	1 3/4"	STEEL	COATING	G	6'-8"	7'-4"	6"	R	STEEL	COATING	E	E	E	HW 4	NR	NR	-
201-1	PR 3'-2"	7'-2"	1 3/4"	STEEL	COATING	F	6'-8"	10'-0"	6"	T	STEEL	COATING	E	E	E	HW 5	NR	NR	-

ROOM FINISH SCHEDULE

ROOM NO.	ROOM NAME	FLOOR MAT'L	FLOOR FINISH	BASE MAT'L	NORTH WALL MAT'L	NORTH WALL FINISH	EAST WALL MAT'L	EAST WALL FINISH	SOUTH WALL MAT'L	SOUTH WALL FINISH	WEST WALL MAT'L	WEST WALL FINISH	CEILING MAT'L	CEILING HEIGHT	CEILING FINISH
RIVER PUMP STATION - DRAWING 10024A1021A01															
101	PUMP ROOM	CONC	NSC	CMU	CMU	EXPO	CMU	EXPO	CMU	EXPO	CMU	EXPO	MDECK	±14'-0"	EXPO
102	HIGH VOLTAGE ELECTRICAL ROOM	CONC	NSC	RESILIENT	MCIG	PAINTED	MCIG	PAINTED	MCIG	PAINTED	MCIG	PAINTED	MDECK	±14'-0"	EXPO
103	RESTROOM	CONC	NSC	RESILIENT	MCIG/WFRP	PAINTED/EXPO	MCIG/WFRP	PAINTED/EXPO	CMU/WFRP	EXPO	MCIG/WFRP	PAINTED/EXPO	GYP	± 9'-0"	PAINTED
104	LOW VOLTAGE ELECTRICAL ROOM	CONC	NSC	RESILIENT	MCIG	PAINTED	CMU	EXPO	MCIG	PAINTED	MCIG	PAINTED	GYP	± 9'-0"	PAINTED
RO BUILDING - DRAWING 10024A1025A01															
101	PROCESS AREA	CONC	SEALER	CMU	CMU	EXPO	CMU	EXPO	CMU	EXPO	CMU	EXPO	MDECK	±28'-0"	EXPO
102	ELECTRICAL ROOM	CONC	SEALER	RESILIENT	MCIG	PAINTED	MCIG	PAINTED	MCIG	PAINTED	MCIG	PAINTED	CONC	±14'-8"	EXPO
201	MEZZANINE AREA	CONC	SEALER	CMU	CMU	EXPO	CMU	EXPO	CMU	EXPO	CMU	EXPO	MDECK	±13'-8"	EXPO

MCIG/FRP PAINTED/EXPO

CODE ANALYSIS ABBREVIATION LIST:

ADA	AMERICANS WITH DISABILITIES ACT
B	BUSINESS GROUP (2019, TITLE 24)
ci	CONTINUOUS INSULATION
CMU	CONCRETE MASONRY UNIT
EXPO	EXPOSED MATERIAL
FT	FEET
F-1	FACTORY INDUSTRIAL GROUP, MODERATE HAZARD OCCUPANCY (2019, TITLE 24)
GYP	GYPSUM WALL BOARD
HW	HARDWARE GROUP, REFERENCE SPECIFICATION SECTION 08710
MAT'L	MATERIAL
MDECK	METAL DECK, PER STRUCTURAL DRAWINGS
MCIG	7/8" METAL FURRING HAT CHANNELS WITH RIGID INSULATION, AND GYPSUM WALL BOARD PAINTED
NSC	NON-SKID FLOOR COATING, REFERENCE SPECIFICATION SECTION 09960
NR	NOT REQUIRED
PR	PAIR
R	REQUIRED
R-VALUE	THERMAL RESISTANCE, IS THE INVERSE OF THE TIME RATE OF HEAT FLOW THROUGH A BODY FROM ONE OF ITS BOUNDING SURFACES TO THE OTHER SURFACE FOR A UNIT TEMPERATURE DIFFERENCE BETWEEN THE TWO SURFACES, UNDER STEADY STATE CONDITIONS, PER UNIT AREA (2019, TITLE 24)
SPEC	SPECIFICATION SECTION
SQ FT	SQUARE FEET
U-FACTOR	THERMAL TRANSMITTANCE, IS THE COEFFICIENT OF HEAT TRANSMISSION (AIR TO AIR) THROUGH A BUILDING COMPONENT OR ASSEMBLY, EQUAL TO THE TIME RATE OF HEAT FLOW PER UNIT AREA AND UNIT TEMPERATURE DIFFERENCE BETWEEN THE WARM SIDE AND COLD SIDE AIR FILMS (2019, TITLE 24)
WFRP	STANDARD FRP WALL SYSTEM, SMOOTH FINISH, LIGHT GRAY S490N AS MANUFACTURED BY MARLITE OR EQUAL. FRP SHALL BE INSTALLED AT THE PERIMETER (INTERIOR FACE) OF THE FOUR RESTROOM WALLS, THE FRP WALL SYSTEM SHALL BE 4'H FROM FINISH FLOOR.

REV	DATE	BY	DESCRIPTION
1	11-04-20	BMR	REVISED PER ADDENDUM NO. 3

DESIGNED BMR
DRAWN BMR
CHECKED MEH
DATE SEPTEMBER 2020

Digitally signed by Scott C. Weddle
Contact Info: Carollo Engineers, Inc.
Date: 2020.11.04 17:15:49-08'00'

REGISTERED PROFESSIONAL ENGINEER SCOTT CLARK WEDDLE No. 49851 CIVIL STATE OF CALIFORNIA

carollo

ANTIOCH CALIFORNIA OPPORTUNITY LIVES•HERE

CITY OF ANTIOCH

ANTIOCH BRACKISH WATER DESALINATION PROJECT

ARCHITECTURAL

BUILDING CODE ANALYSIS AND SCHEDULES

VERIFY SCALES
BAR IS ONE INCH ON ORIGINAL DRAWING
0 1"
IF NOT ONE INCH ON THIS SHEET, ADJUST SCALES ACCORDINGLY

JOB NO. 10024A.10
DRAWING NO. 00A01
SHEET NO. 122 OF 498

LAST SAVED BY: BMurillo Model: Layout1 ColorTable: gshade.ctb DesignScript: Carollo_Std_Pen_v0905.pen PlotScale: 1:1 User: svcPW Plot Date: 04-NOV-2020 11:40:39 AM

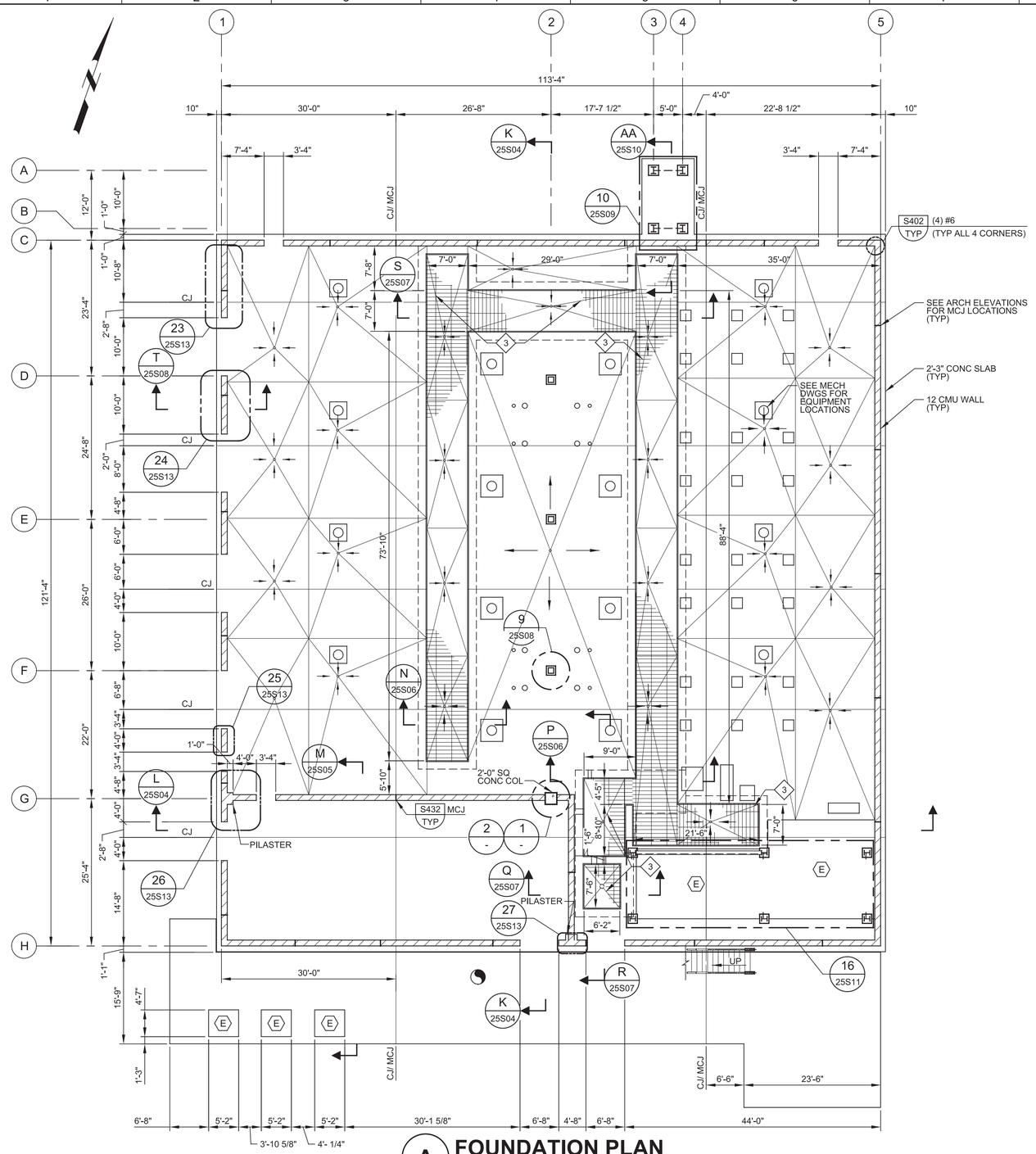

A FOUNDATION PLAN

SCALE: 3/32" = 1'-0"
FILE: 10024A1025S0111

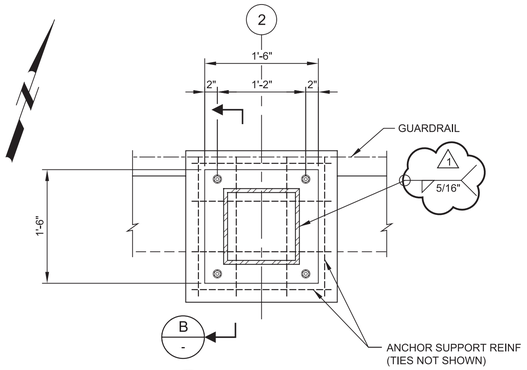

1 DETAIL

SCALE: 1" = 1'-0"
FILE: 10024A1025S0412

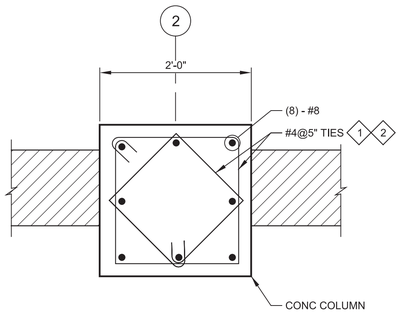

2 DETAIL

SCALE: 1" = 1'-0"
FILE: 10024A1025S0413

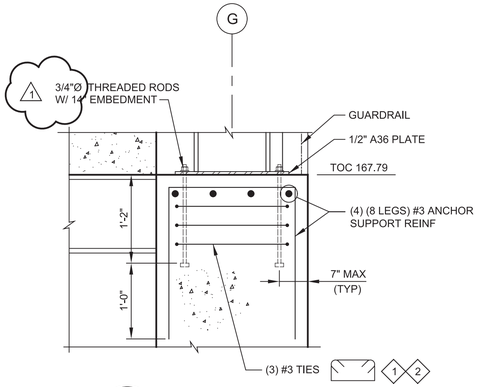

B SECTION

SCALE: 1" = 1'-0"
FILE: 10024A1025S0311

GENERAL NOTES:

1. FOR GENERAL STRUCTURAL NOTES, SEE DRAWING G10.
2. STRUCTURE SEISMIC RISK CATEGORY IS III.
3. CMU BLOCKS ARE 12" FULLY GROUTED.
4. FOR SUBGRADE PREPARATION, REFER TO DETAIL F101/TYP.
5. COORDINATE, PAD LOCATIONS, WALL AND FLOOR PENETRATIONS WITH EQUIPMENT MANUFACTURER.
6. UNLESS OTHER WISE SPECIFIED, MINIMUM EDGE DISTANCE IS 8" FOR ANCHORS.
7. PIPE PENETRATIONS PER MECHANICAL USING DETAIL S180/TYP.

KEY NOTES:

1. PROVIDE TIES WITH YIELD STRENGTH OF 80,000 PSI (ASTM615 GR 80).
2. TIE ENDS SHALL TERMINATE WITH 135 DEGREE MINIMUM STANDARD HOOKS AND ENGAGE A LONGITUDINAL BAR WITH 6" MINIMUM OVERLAP. ENDS OF ADJACENT CIRCULAR TIES SHALL BE STAGGERED AROUND THE PERIMETER ENCLOSING THE LONGITUDINAL BAR.
3. SLOPES SHOWN ON THE TRENCH COVERS ACTUALLY REFER TO SLOPES AT THE FLOOR OF THE TRENCH.

REV	DATE	BY	DESCRIPTION
1	11-04-20	KP	REVISED PER ADDENDUM NO. 3

DESIGNED KVP
DRAWN KA
CHECKED MD
DATE SEPTEMBER 2020

Digitally signed by Keushik V. Punyamurtula
Contact Info: Carollo Engineers
Date: 2020.11.04 19:22:48-08'00'

REGISTERED PROFESSIONAL ENGINEER KAUSHIK V. PUNYAMURTULA No. 83261 CIVIL STATE OF CALIFORNIA

carollo

ANTIOCH CALIFORNIA OPPORTUNITY LIVES·HERE

CITY OF ANTIOCH
ANTIOCH BRACKISH WATER DESALINATION PROJECT
STRUCTURAL
RO BUILDING
FOUNDATION PLAN, SECTION, AND DETAILS

VERIFY SCALES
BAR IS ONE INCH ON ORIGINAL DRAWING
0 1"
IF NOT ONE INCH ON THIS SHEET, ADJUST SCALES ACCORDINGLY

JOB NO. 10024A.10
DRAWING NO. 25S01
SHEET NO. 139 OF 498

Plot Date: 04-NOV-2020 3:44:21 PM
User: svcPW
PlotScale: 1:1
DesignScript: Carollo_Std_Pen_v0905.pen
ColorTable: gshade.ctb
Model: Layout1
LAST SAVED BY: tumadhay

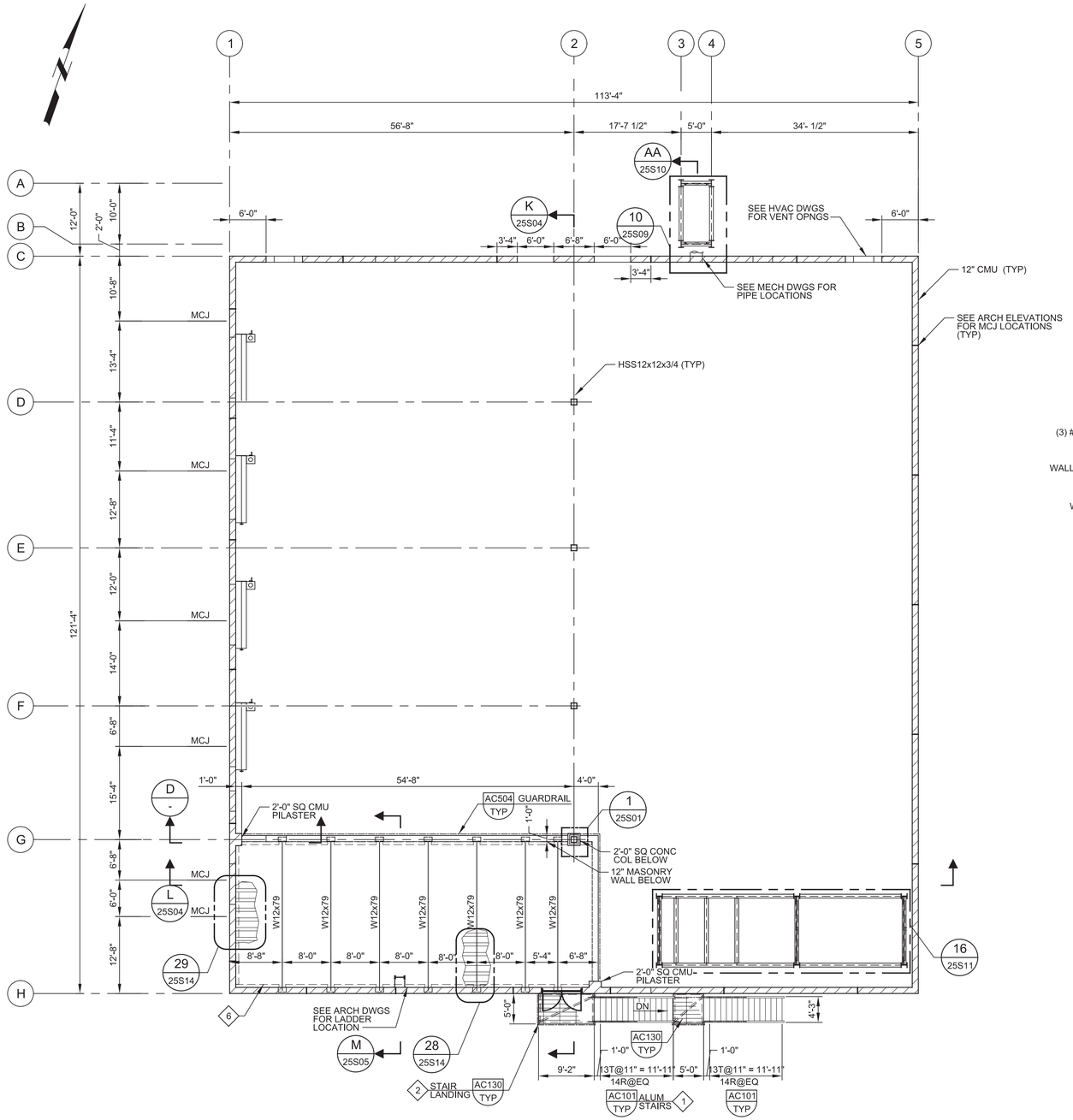

C FLOOR/EQUIPMENT PLATFORM PLAN

SCALE: 3/32" = 1'-0"
FILE: 10024A1025S0112

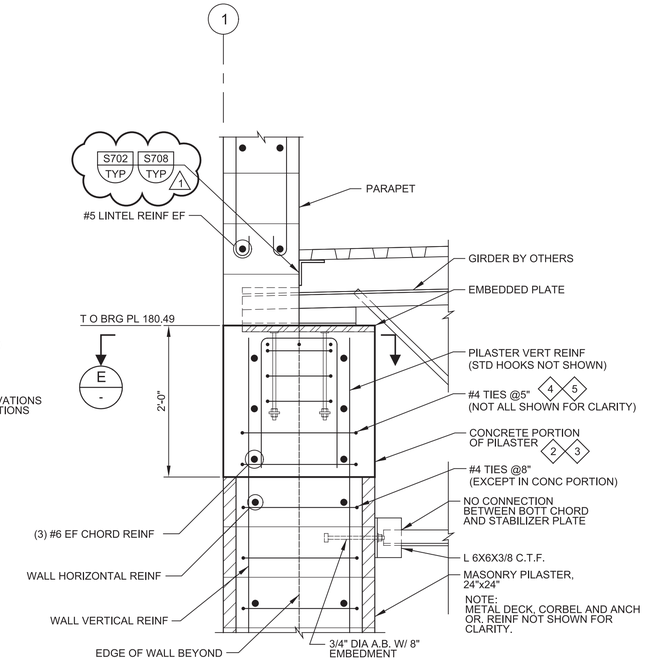

D 25S01 SECTION

SCALE: 1" = 1'-0"
FILE: 10024A1025S0410

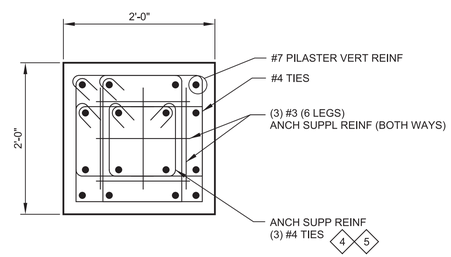

E - SECTION

SCALE: 1" = 1'-0"
FILE: 10024A1025S0410

GENERAL NOTES:

1. FOR LOCATION OF EQUIPMENT, ANCHORS, HVAC DUCTS AND ELECTRICAL CONDUITS SEE ELECTRICAL, MECHANICAL AND HVAC DRAWINGS.
2. ALL HOUSEKEEPING PAD LOCATIONS TO BE VERIFIED BY CONTRACTOR.

KEY NOTES:

1. MASONRY ANCHORS SHALL HAVE A MINIMUM EMBEDMENT DEPTH OF 8 INCHES.
2. CONCRETE PORTION OF THE WALL IS FROM ELEVATION 178.49 TO 180.49 AND IS 2 FEET IN HEIGHT. CONTRACTOR TO VERIFY ELEVATIONS. THE CONCRETE PORTION RUNS IN NORTH-SOUTH DIRECTION AND IS LOCATED ON BOTH EAST AND WEST WALLS.
3. AT CORBEL, WIDTH OF THE CONCRETE PORTION IS 2'-6" AND AT PILASTER 2'-0" (APPROXIMATE).
4. PROVIDE TIES WITH YIELD STRENGTH OF 80,000 PSI (ASTM615 GR 80).
5. TIE ENDS SHALL TERMINATE WITH 135 DEGREE MINIMUM STANDARD HOOKS AND ENGAGE A LONGITUDINAL BAR WITH 6" MINIMUM OVERLAP. ENDS OF ADJACENT CIRCULAR TIES SHALL BE STAGGERED AROUND THE PERIMETER ENCLOSING THE LONGITUDINAL BAR.
6. CONFIGURATION OF ANGLE AND CONNECTION DETAILS BETWEEN ANGLE AND COMPOSITE DECK AND ANGLE AND MASONRY WALL ARE SIMILAR TO DETAIL 29 ON SHEET 25S14.

REV	DATE	BY	DESCRIPTION
1	11-04-20	KP	REVISED PER ADDENDUM NO. 3

DESIGNED KVP
DRAWN KA
CHECKED MD
DATE SEPTEMBER 2020

Digitally signed by Kaushik V. Punyamurtula
Contact Info: Carollo Engineers
Date: 2020.11.04 19:24:17-08'00'
Kaushik V. Punyamurtula

REGISTERED PROFESSIONAL ENGINEER KAUSHIK V. PUNYAMURTULA No. 83261 CIVIL STATE OF CALIFORNIA

carollo®

ANTIOCH CALIFORNIA OPPORTUNITY LIVES·HERE

CITY OF ANTIOCH
ANTIOCH BRACKISH WATER DESALINATION PROJECT
STRUCTURAL
RO BUILDING
FLOOR EQUIPMENT PLATFORM PLAN AND SECTIONS

VERIFY SCALES
BAR IS ONE INCH ON ORIGINAL DRAWING
0 1"
IF NOT ONE INCH ON THIS SHEET, ADJUST SCALES ACCORDINGLY

JOB NO. 10024A.10
DRAWING NO. 25S02
SHEET NO. 140 OF 498

PROJECT NO. 10024A10 FILE NAME: 10024A1025S02.dgn

Plot Date: 04-NOV-2020 3:45:22 PM User: svcPW PlotScale: 1:1 DesignScript: Carollo_Std_Pen_v0905.pen ColorTable: gshade.ctb Model: Layout1 LAST SAVED BY: tumadhay

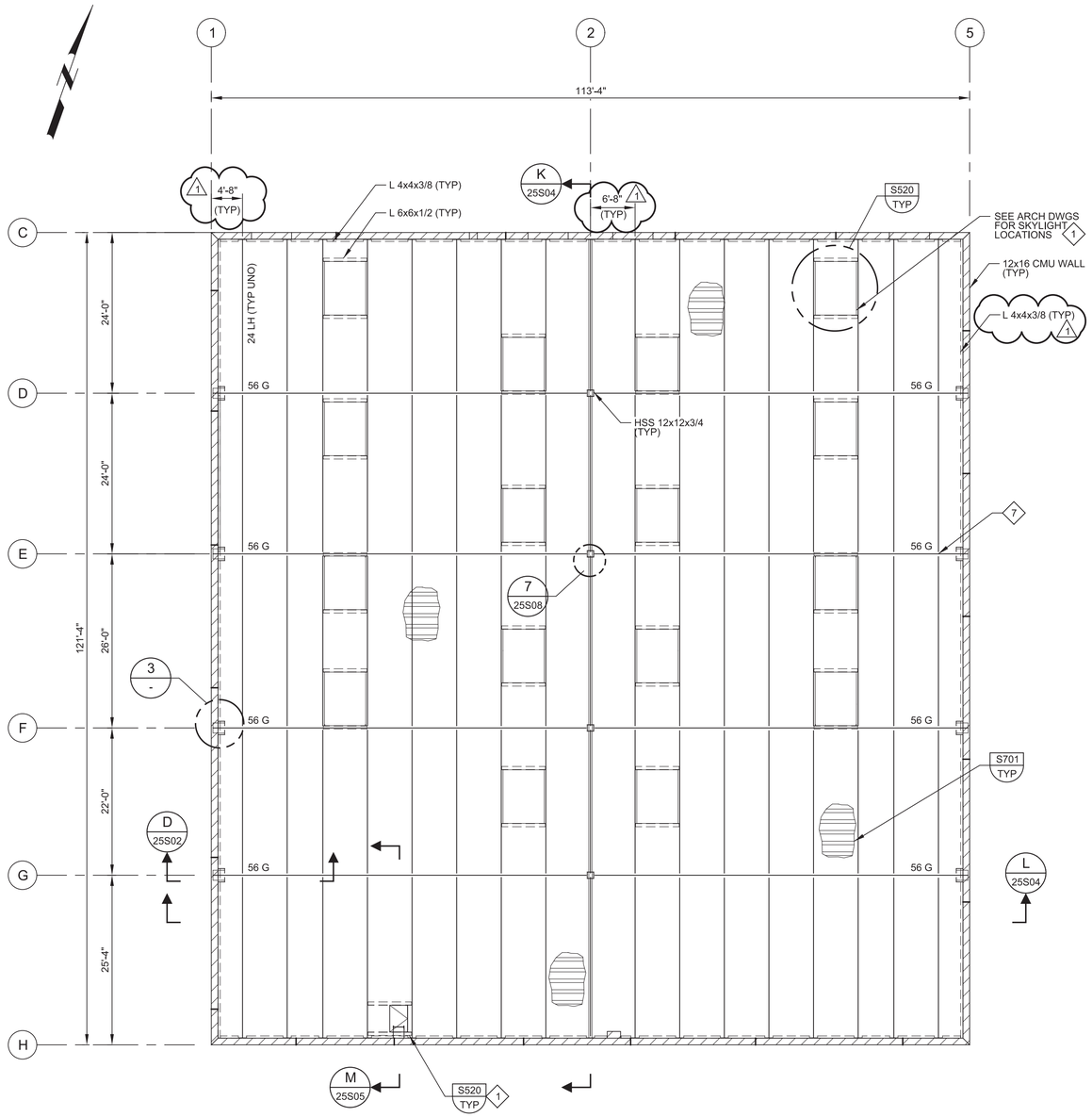

F ROOF PLAN
SCALE: 3/32" = 1'-0"
FILE: 10024A1025S0113

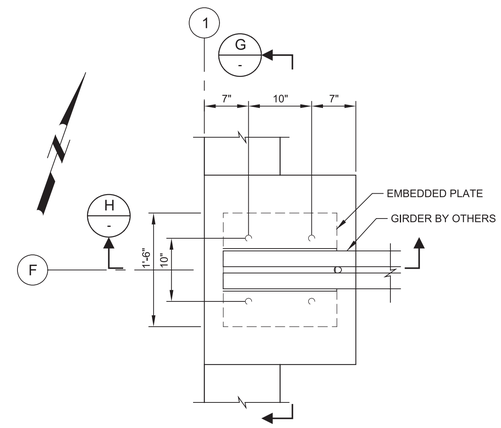

3 DETAIL
SCALE: 1" = 1'-0"
FILE: 10024A1025S0414

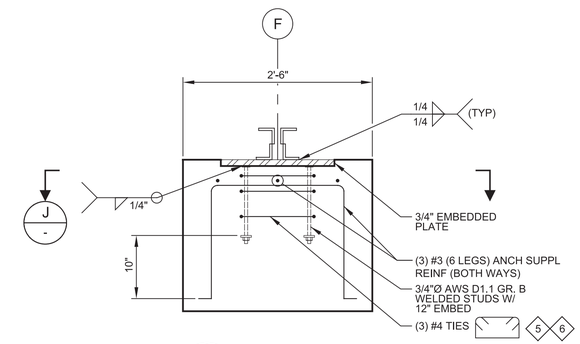

G SECTION
SCALE: 1" = 1'-0"
FILE: 10024A1025S0332

NOTE:
WALL AND CORBEL REINF NOT SHOWN FOR CLARITY.

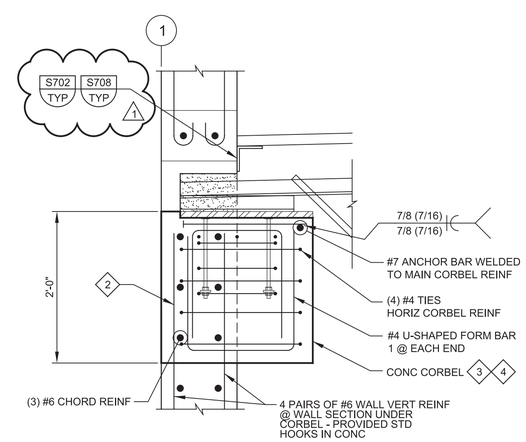

H SECTION
SCALE: 1" = 1'-0"
FILE: 10024A1025S0320

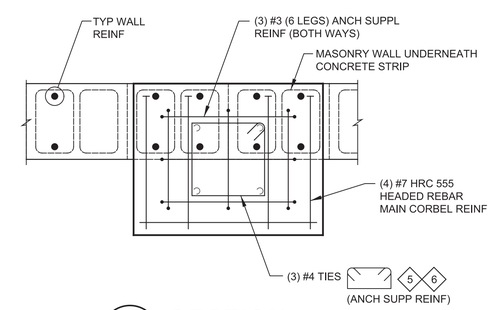

J SECTION
SCALE: 1" = 1'-0"
FILE: 10024A1025S0320

GENERAL NOTES:

1. ROOF LIVE LOAD = 20 PSF.
2. ROOFING NOT SHOWN FOR CLARITY.

KEY NOTES:

1. CONTRACTOR TO VERIFY AND PROVIDE OPENING AND DESIGN FRAMING TO MATCH THE RECOMMENDATIONS OF SKYLIGHT MANUFACTURER.
2. FOR WALL REINFORCEMENT UNDER CORBEL EXTENDING INTO CORBEL, PROVIDE STANDARD HOOKS (NOT SHOWN IN DETAIL).
3. CONCRETE PORTION OF THE WALL IS FROM ELEVATION 178.49 TO 180.49 AND IS 2 FEET IN HEIGHT. CONTRACTOR TO VERIFY ELEVATIONS. THE CONCRETE PORTION RUNS IN NORTH-SOUTH DIRECTION AND IS LOCATED ON BOTH EAST AND WEST WALLS.
4. AT CORBEL, WIDTH OF THE CONCRETE PORTION IS 2'-6" AND AT PILASTER 2'-0" (APPROXIMATE).
5. PROVIDE TIES WITH YIELD STRENGTH OF 80,000 PSI (ASTM615 GR 80).
6. TIE ENDS SHALL TERMINATE WITH 135 DEGREE MINIMUM STANDARD HOOKS AND ENGAGE A LONGITUDINAL BAR WITH 6" MINIMUM OVERLAP. ENDS OF ADJACENT CIRCULAR TIES SHALL BE STAGGERED AROUND THE PERIMETER ENCLOSING THE LONGITUDINAL BAR.
7. CONTRACTOR TO DESIGN CONNECTION BETWEEN JOIST AND GIRDER.

REV	DATE	BY	DESCRIPTION
1	11-04-20	KP	REVISED PER ADDENDUM NO. 3

DESIGNED KVP
DRAWN KA
CHECKED MD
DATE SEPTEMBER 2020

Digitally signed by Kaushik V. Punyamurtula
Contact Info: Carollo Engineers
Date: 2020.11.04 19:25:20-08'00'

REGISTERED PROFESSIONAL ENGINEER KAUSHIK V. PUNYAMURTULA No. 83261 CIVIL STATE OF CALIFORNIA

carollo

ANTIOCH CALIFORNIA OPPORTUNITY LIVES·HERE

CITY OF ANTIOCH
ANTIOCH BRACKISH WATER DESALINATION PROJECT
STRUCTURAL
RO BUILDING
ROOF PLAN, SECTIONS, AND DETAIL

VERIFY SCALES
BAR IS ONE INCH ON ORIGINAL DRAWING
0 1"
IF NOT ONE INCH ON THIS SHEET, ADJUST SCALES ACCORDINGLY

JOB NO. 10024A.10
DRAWING NO. 25S03
SHEET NO. 141 OF 498

LAST SAVED BY: tumadhay Model: Layout1 ColorTable: gshade.ctb DesignScript: Carollo_Std_Pen_v0905.pen PlotScale: 1:1 User: svcPW Plot Date: 04-NOV-2020 3:47:30 PM

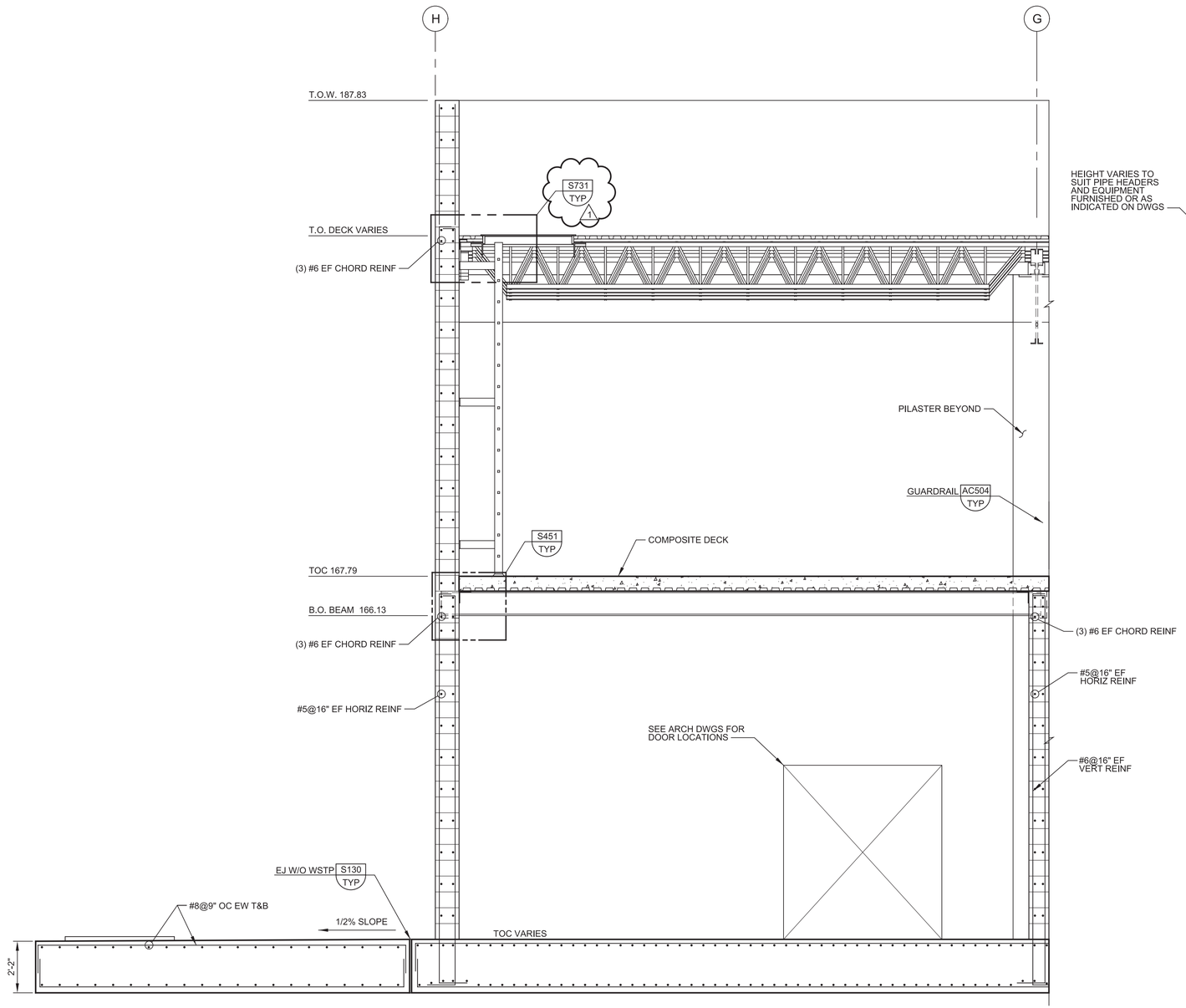

M 25S01 **SECTION**
SCALE: 3/8" = 1'-0"
FILE: 10024A1025S0316

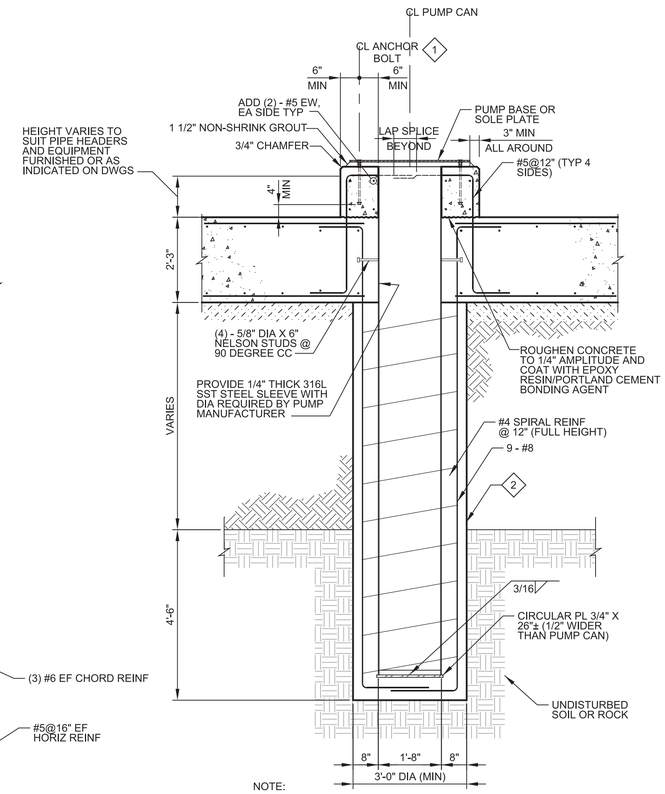

NOTE:

1. THE EDGE DISTANCE ON THE ANCHOR BOLTS SHALL NOT BE LESS THAN 6" OR 8x "0" INCREASE BASE DIMENSIONS IF NECESSARY.

4 25S04 **DETAIL**
SCALE: 1/2" = 1'-0"
FILE: 10024A1025S0416

GENERAL NOTES:

1. FOR SUBGRADE PREPARATION REFER TO DETAIL F101/TYP.

KEY NOTES:

1. PUMP SUPPLIER TO DESIGN ANCHOR BOLTS FOR PUMP DYNAMIC AND SEISMIC LOADS, AND SUBMIT CALCULATIONS FOR APPROVAL. PUMP PEDESTAL DIMENSIONS AS REQUIRED BY PUMP MANUFACTURER FOR ADEQUATE BASE PLATE. DETAIL IS TYPICAL OF 16 PUMP LOCATIONS.
2. DEPTH OF THE PUMP CAN AND CONCRETE CASING IS PER MANUFACTURER. CONTRACTOR SHALL VERIFY THIS WITH MANUFACTURER PRIOR TO EXCAVATION.

REV	DATE	BY	DESCRIPTION
1	11-04-20	KP	REVISED PER ADDENDUM NO. 3

DESIGNED KVP
DRAWN KA
CHECKED MD
DATE SEPTEMBER 2020

Digitally signed by Keushik V. Punyamurtula
Contact Info: Carollo Engineers
Date: 2020.11.04 19:25:39-08'00'
Keushik V. Punyamurtula

REGISTERED PROFESSIONAL ENGINEER KEUSHIK V. PUNYAMURTULA No. 83261 CIVIL STATE OF CALIFORNIA

carollo

ANTIOCH CALIFORNIA OPPORTUNITY LIVES·HERE

CITY OF ANTIOCH
ANTIOCH BRACKISH WATER DESALINATION PROJECT
STRUCTURAL
RO BUILDING
SECTION AND DETAIL

VERIFY SCALES
BAR IS ONE INCH ON ORIGINAL DRAWING
0 1"
IF NOT ONE INCH ON THIS SHEET, ADJUST SCALES ACCORDINGLY

JOB NO. 10024A.10
DRAWING NO. 25S05
SHEET NO. 143 OF 498

Model: Layout1 ColorTable: gshade.ctb DesignScript: Carollo_Std_Pen_v0905.pen PlotScale: 1:1 User: svcPW Plot Date: 04-NOV-2020 4:14:46 PM LAST SAVED BY: tumadhay

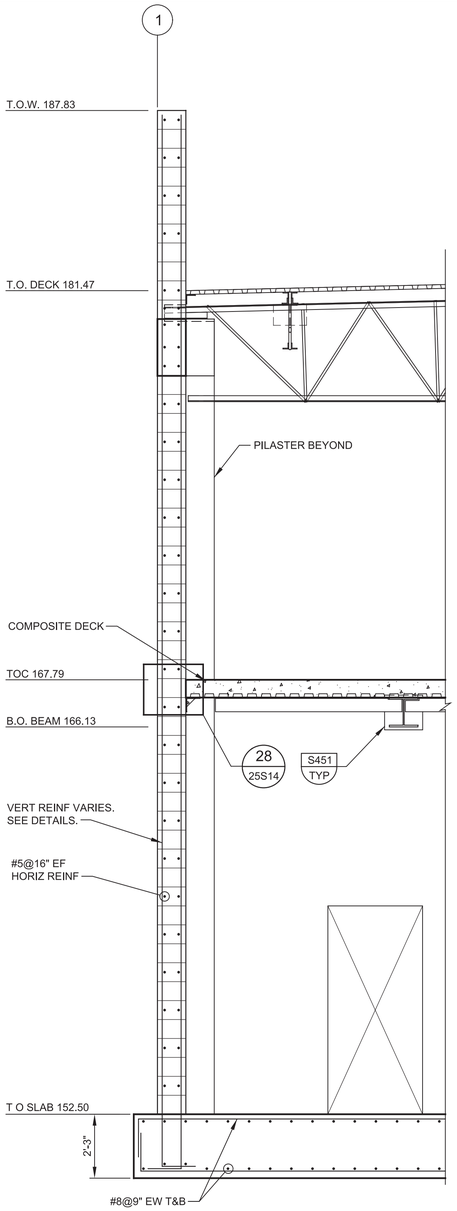

5 25S04 **DETAIL**
SCALE: 3/8" = 1'-0"
FILE: 10024A1025S0315

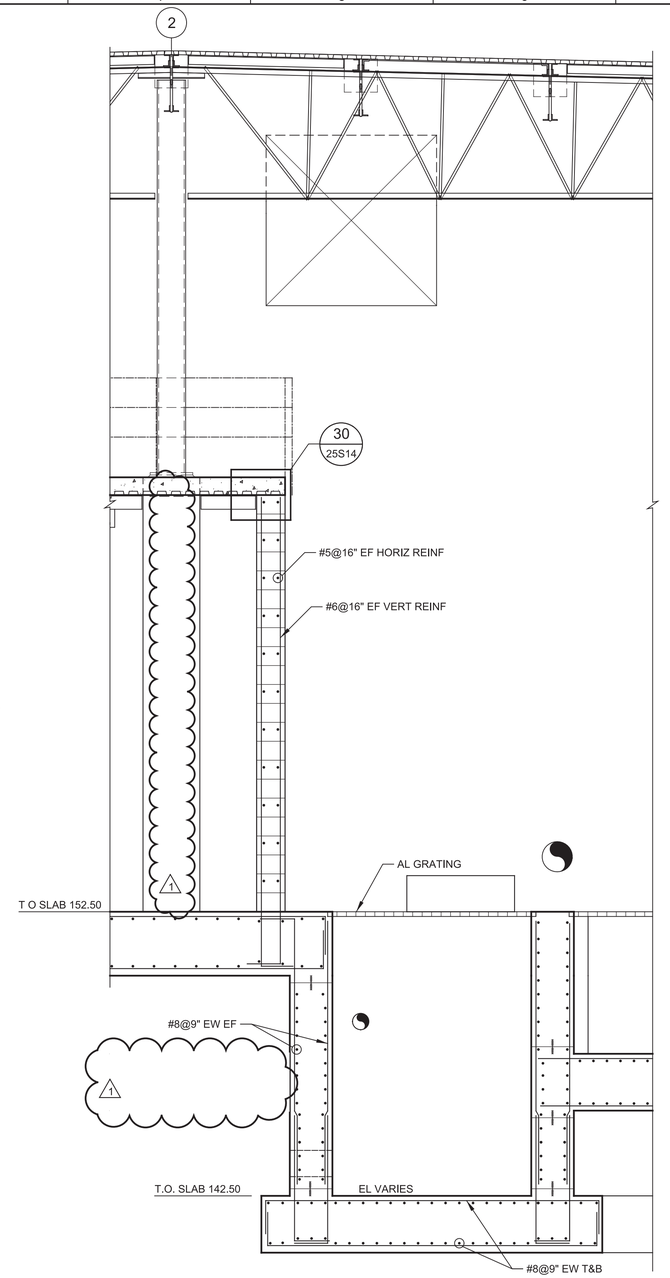

6 25S04 **DETAIL**
SCALE: 3/8" = 1'-0"
FILE: 10024A1025S0312

GENERAL NOTES:

1. FOR SUBGRADE PREPARATION REFER TO DETAIL F101/TYP.

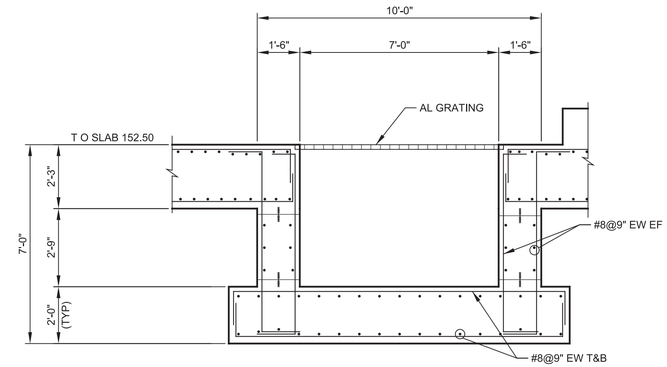

N 25S01 **SECTION**
SCALE: 3/8" = 1'-0"
FILE: 10024A1025S0319

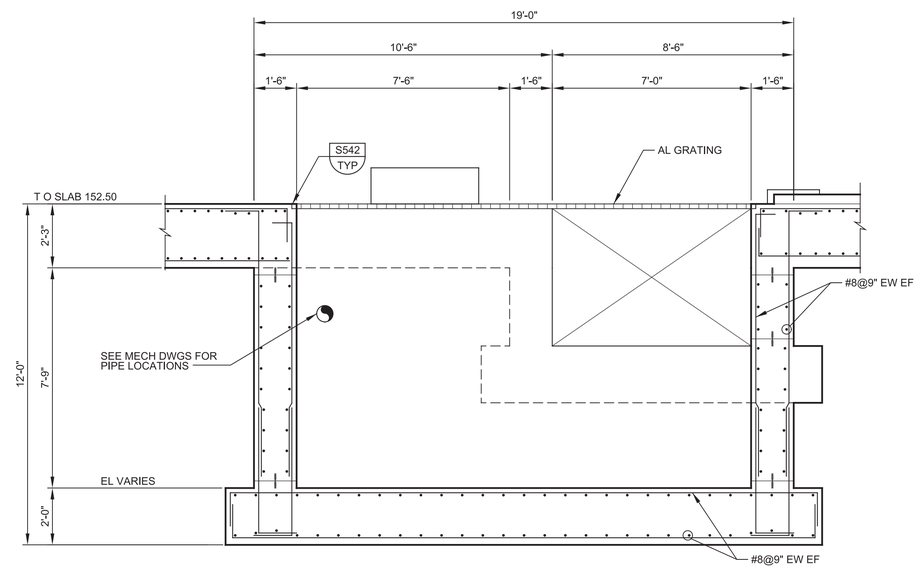

P 25S01 **SECTION**
SCALE: 3/8" = 1'-0"
FILE: 10024A1025S0314

REV	DATE	BY	DESCRIPTION
1	11-04-20	KP	REVISED PER ADDENDUM NO. 3

DESIGNED KVP
DRAWN KA
CHECKED MD
DATE SEPTEMBER 2020

Digitally signed by Kaushik V. Punyamurtula
Contact Info: Carollo Engineers
Date: 2020.11.04 19:26:05-08'00'
Kaushik V. Punyamurtula

REGISTERED PROFESSIONAL ENGINEER
KAUSHIK V. PUNYAMURTULA
No. 83261
CIVIL
STATE OF CALIFORNIA

carollo

ANTIOCH CALIFORNIA
OPPORTUNITY LIVES·HERE

CITY OF ANTIOCH
ANTIOCH BRACKISH WATER DESALINATION PROJECT
STRUCTURAL
RO BUILDING
SECTIONS AND DETAILS

VERIFY SCALES
BAR IS ONE INCH ON ORIGINAL DRAWING
0 1"
IF NOT ONE INCH ON THIS SHEET, ADJUST SCALES ACCORDINGLY

JOB NO. 10024A.10
DRAWING NO. 25S06
SHEET NO. 144 OF 498

PROJECT NO. 10024A10 FILE NAME: 10024A1025S06.dgn

Plot Date: 04-NOV-2020 4:14:47 PM
User: svcPW
PlotScale: 1:1
DesignScript: Carollo_Std_Pen_v0905.pen
ColorTable: gshade.ctb
Model: Layout1
LAST SAVED BY: tumadhay

GENERAL NOTES:

1. FOR SUBGRADE PREPARATION, REFER TO DETAIL F101/TYP.

KEY NOTES:

1. KNIFE PLATE SHALL HAVE A MINIMUM YIELD STRENGTH OF 50 KSI .
2. CONTRACTOR TO COORDINATE WITH TRUSS MANUFACTURER. COLUMN LENGTH NEEDS TO BE ADJUSTED ACCORDINGLY

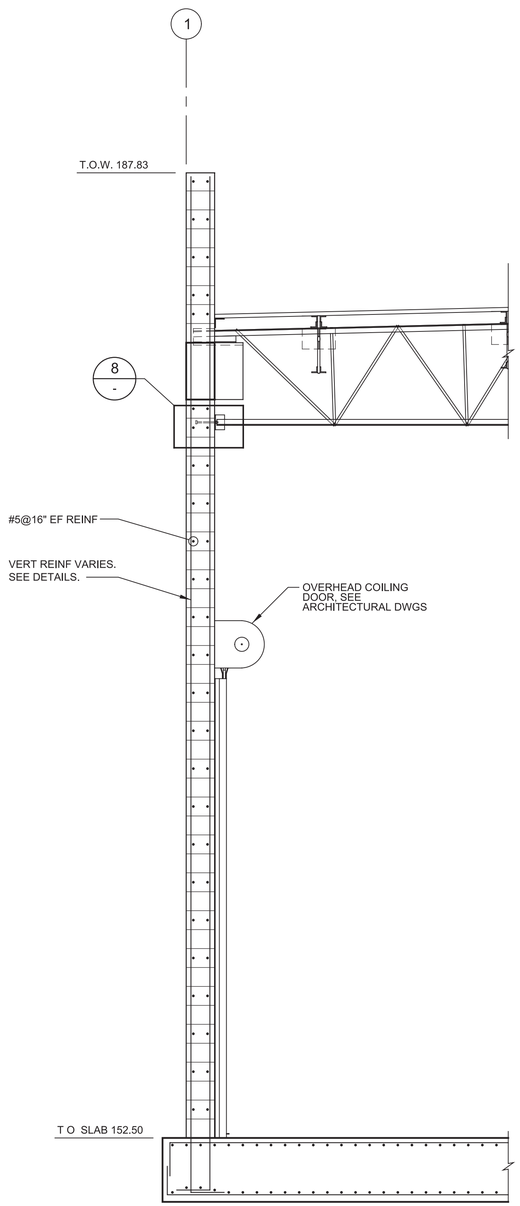

T SECTION (25S01)
SCALE: 3/8" = 1'-0"
FILE: 10024A1025S0330

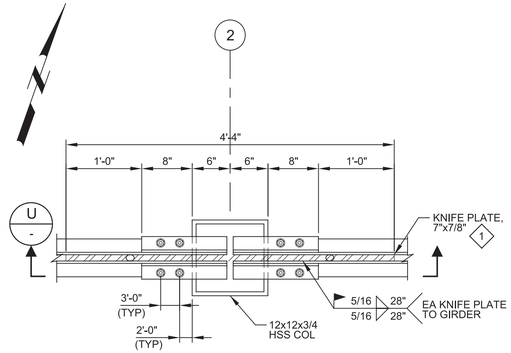

7 DETAIL (25S03)
SCALE: 1" = 1'-0"
FILE: 10024A1025S0415

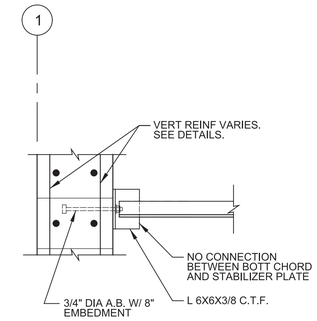

8 DETAIL (-)
SCALE: 1" = 1'-0"
FILE: 10024A1025S0330

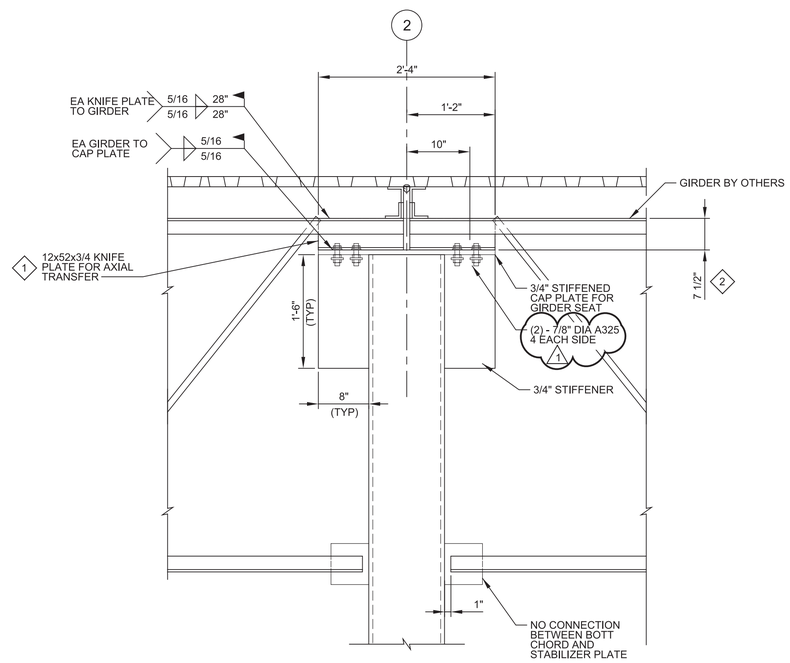

U SECTION (-)
SCALE: 1" = 1'-0"
FILE: 10024A1025S0411

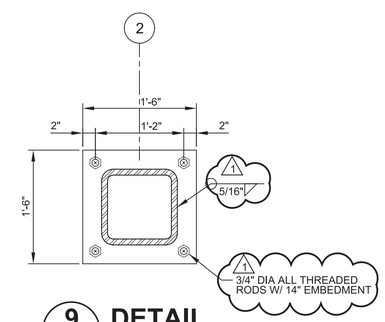

9 DETAIL (25S01)
SCALE: 1" = 1'-0"
FILE: 10024A1025S0416

REV	DATE	BY	DESCRIPTION
1	11-04-20	KP	REVISED PER ADDENDUM NO. 3

DESIGNED KVP
DRAWN KA
CHECKED MD
DATE SEPTEMBER 2020

Digitally signed by Kaushik V. Punyamurtula
Contact Info: Carollo Engineers
Date: 2020.11.04 19:26:27-08'00'

REGISTERED PROFESSIONAL ENGINEER KAUSHIK V. PUNYAMURTULA No. 83261 CIVIL STATE OF CALIFORNIA

carollo

ANTIOCH CALIFORNIA OPPORTUNITY LIVES·HERE

CITY OF ANTIOCH

ANTIOCH BRACKISH WATER DESALINATION PROJECT

STRUCTURAL

RO BUILDING
SECTIONS AND DETAILS

VERIFY SCALES
BAR IS ONE INCH ON ORIGINAL DRAWING
0 1"
IF NOT ONE INCH ON THIS SHEET, ADJUST SCALES ACCORDINGLY

JOB NO. 10024A.10
DRAWING NO. 25S08
SHEET NO. 146 OF 498

Plot Date: 04-NOV-2020 4:14:51 PM
User: svcPW
PlotScale: 1:1
DesignScript: Carollo_Std_Pen_v0905.pen
ColorTable: gshade.ctb
Model: Layout1
LAST SAVED BY: tumadhay

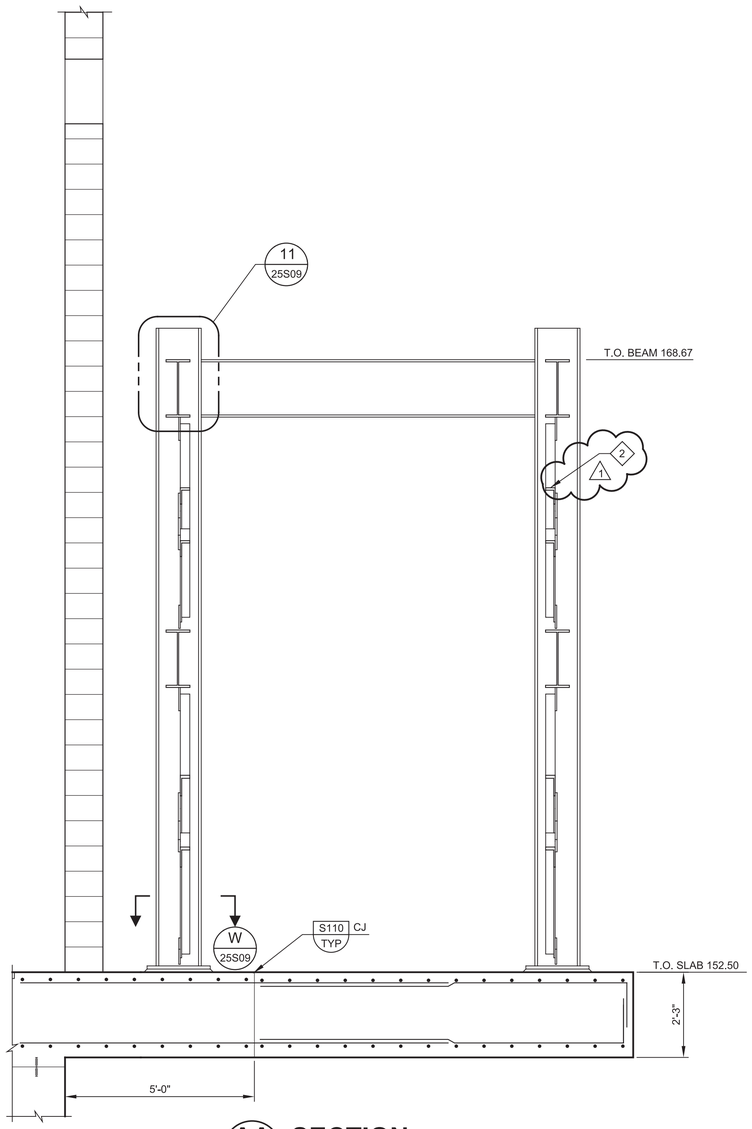

AA SECTION
25S01
SCALE: 1/2" = 1'-0"
FILE: 10024A1025S0318

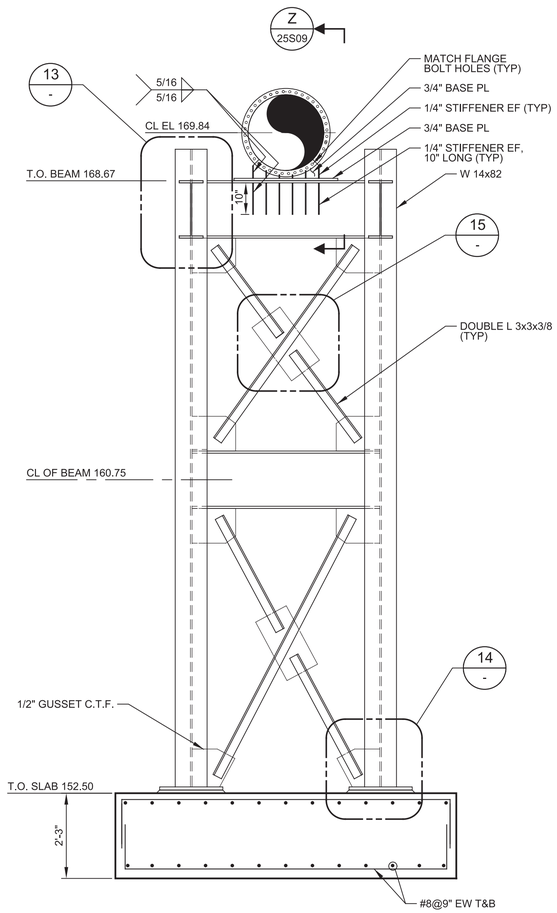

AB SECTION
25S01
SCALE: 1/2" = 1'-0"
FILE: 10024A1025S0317

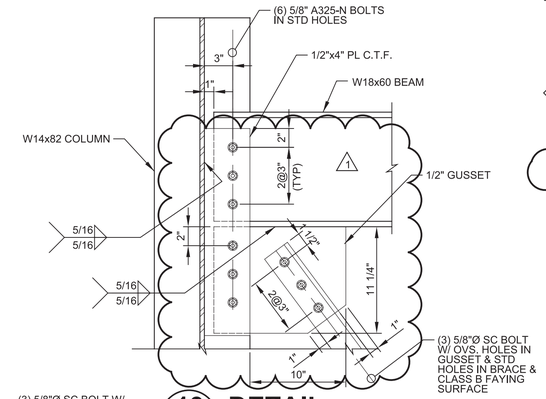

13 DETAIL
-
SCALE: 1 1/2" = 1'-0 '
FILE: 10024A1025S0405

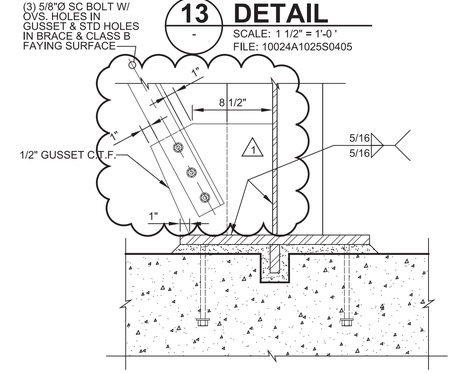

NOTE:
FOUNDATION REINFORCEMENT NOT SHOWN FOR CLARITY.

14 DETAIL
-
SCALE: 1 1/2" = 1'-0 '
FILE: 10024A1025S0405

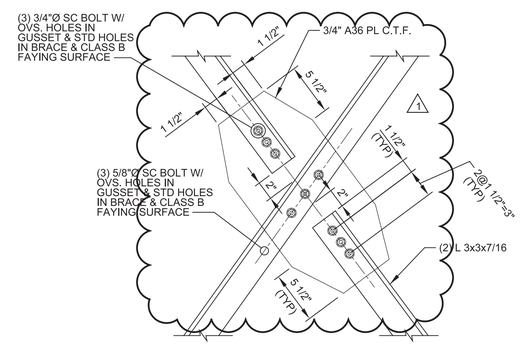

15 DETAIL
-
SCALE: 1 1/2" = 1'-0 '
FILE: 10024A1025S0405

GENERAL NOTES:

1. FOR SUBGRADE PREPARATION, REFER TO DETAIL F101/TYP.
2. NOTE ALL BOLTS AND STEEL FRAMING TO BE HOT-DIPPED GALVANIZED.

KEY NOTES:

1. PROVIDE SHEAR LUGS IN BOTH DIRECTIONS. MOVE ANCHOR REINFORCEMENT WITHIN THE PRESCRIBED TOLERANCES TO ACCOMMODATE SHEAR LUGS. SEE DETAIL 12/25S09.
2. CROSS BRACING CONSISTS OF L3x3x3/8 DOUBLE ANGLES. 1

REV	DATE	BY	DESCRIPTION
1	11-04-20	KP	REVISED PER ADDENDUM NO. 3

DESIGNED KVP
DRAWN KA
CHECKED MD
DATE SEPTEMBER 2020

Digitally signed by Kaushik V. Punyamurtula
Contact Info: Carollo Engineers
Date: 2020.11.04 19:26:52-08'00'
Kaushik V. Punyamurtula

REGISTERED PROFESSIONAL ENGINEER
KAUSHIK V. PUNYAMURTULA
No. 83261
CIVIL
STATE OF CALIFORNIA

carollo

ANTIOCH CALIFORNIA
OPPORTUNITY LIVES·HERE

CITY OF ANTIOCH
ANTIOCH BRACKISH WATER DESALINATION PROJECT
STRUCTURAL
RO BUILDING PIPE SUPPORT SECTIONS AND DETAILS

VERIFY SCALES
BAR IS ONE INCH ON ORIGINAL DRAWING
0 1"
IF NOT ONE INCH ON THIS SHEET, ADJUST SCALES ACCORDINGLY

JOB NO. 10024A.10
DRAWING NO. 25S10
SHEET NO. 148 OF 498

Plot Date: 04-NOV-2020 3:50:52 PM
User: svcPW
PlotScale: 1:1
DesignScript: Carollo_Std_Pen_v0905.pen
ColorTable: gshade.ctb
Model: Layout1
LAST SAVED BY: tumadhay

PROJECT NO. 10024A10 FILE NAME: 10024A1025S10.dgn

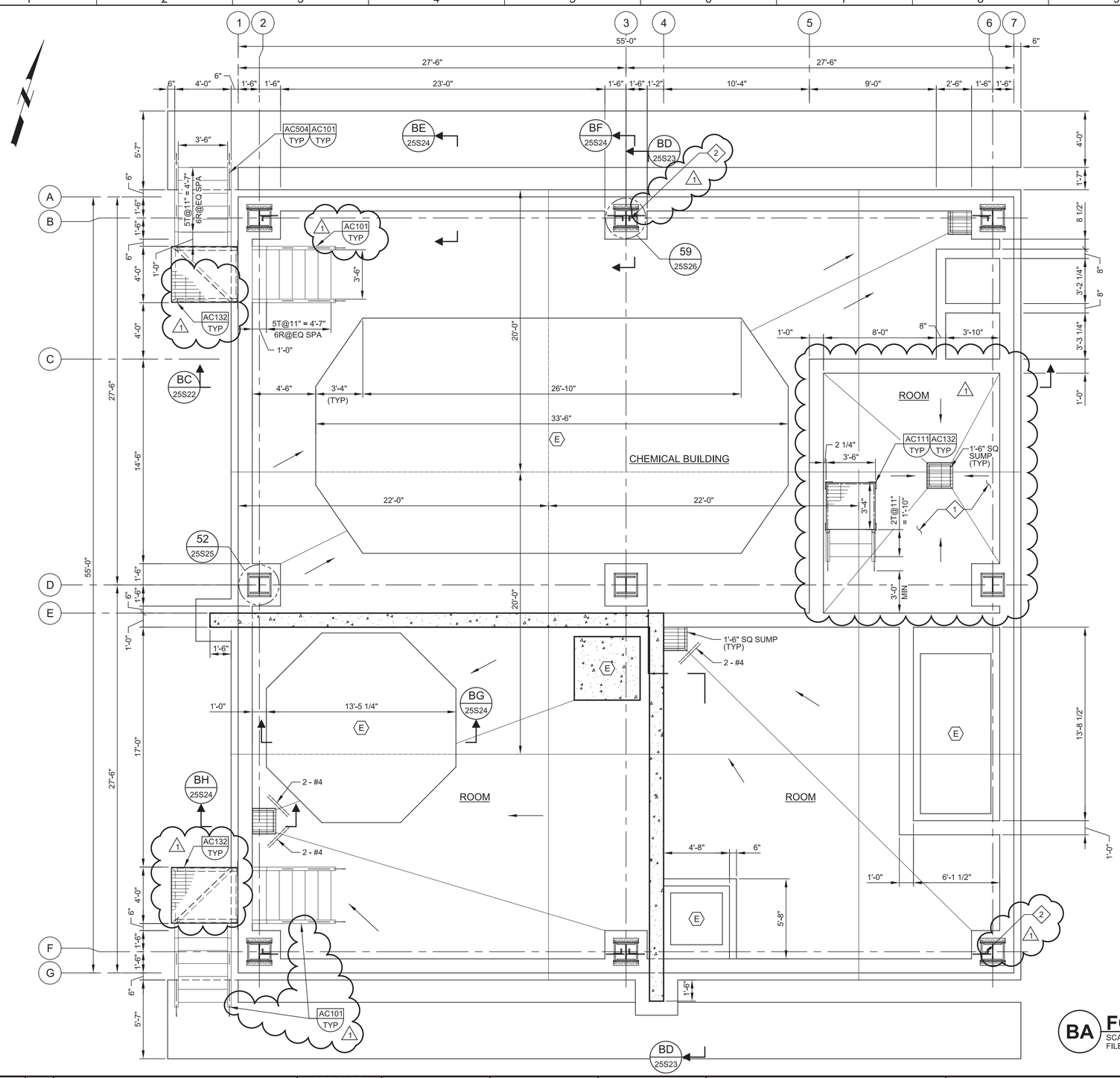

GENERAL NOTES:

1. SHALLOW FOUNDATIONS FOR THE CHEMICAL BULK STORAGE BUILDING BE UNDERLAIN BY A MINIMUM OF 24-INCHES AGGREGATE BASE.
2. FOR GENERAL NOTES REFER TO SHEET G10.

KEY NOTES:

1. CONCRETE COATED WITH A CHEMICAL RESISTANT COATING.
2. CROSS BRACING CONSISTS OF L4x4x1/2 DOUBLE ANGLES.

BA FOUNDATION PLAN

SCALE: 1/4" = 1'-0"
FILE: 10024A1025S0121

REV	DATE	BY	DESCRIPTION
1	11-04-20	KP	REVISED PER ADDENDUM NO. 3

DESIGNED KVP
DRAWN JBB
CHECKED MD
DATE SEPTEMBER 2020

Digitally signed by Kaushik V. Punyamurtula
Contact Info: Carollo Engineers
Date: 2020.11.04 19:27:14-08'00'

REGISTERED PROFESSIONAL ENGINEER KAUSHIK V. PUNYAMURTULA No. 83261 CIVIL STATE OF CALIFORNIA

carollo

ANTIOCH CALIFORNIA OPPORTUNITY LIVES·HERE

CITY OF ANTIOCH
ANTIOCH BRACKISH WATER DESALINATION PROJECT
STRUCTURAL
CHEMICAL STORAGE BUILDING
FOUNDATION PLAN

VERIFY SCALES
BAR IS ONE INCH ON ORIGINAL DRAWING
0 1"
IF NOT ONE INCH ON THIS SHEET, ADJUST SCALES ACCORDINGLY

JOB NO. 10024A.10
DRAWING NO. 25S20
SHEET NO. 158 OF 498

PROJECT NO. 10024A10 FILE NAME: 10024A1025S20.dgn

LAST SAVED BY: tumadhay
Model: Layout1 ColorTable: gshade.ctb DesignScript: Carollo_Std_Pen_v0905.pen PlotScale: 1:1
User: svcPW Plot Date: 04-NOV-2020 4:27:11 PM

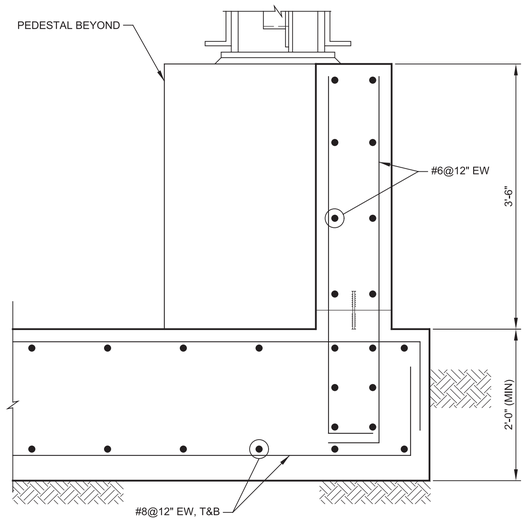

BE 25S20 **SECTION**
SCALE: 1" = 1'-0"
FILE: 10024A1025S0323

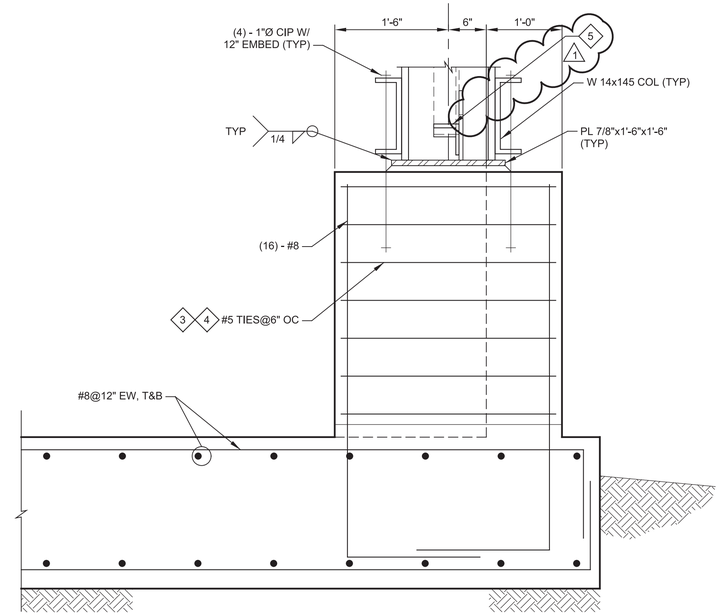

BF 25S20 **SECTION**
SCALE: 1" = 1'-0"
FILE: 10024A1025S0324

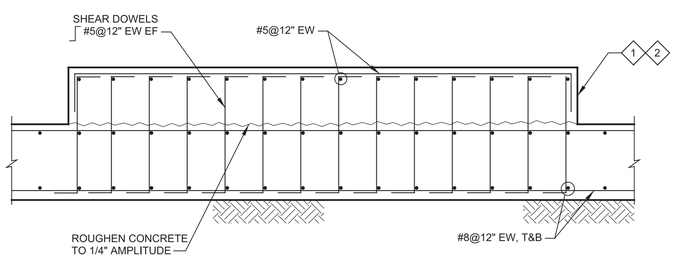

BG 25S20 **SECTION**
SCALE: 1/2" = 1'-0"
FILE: 10024A1025S0422

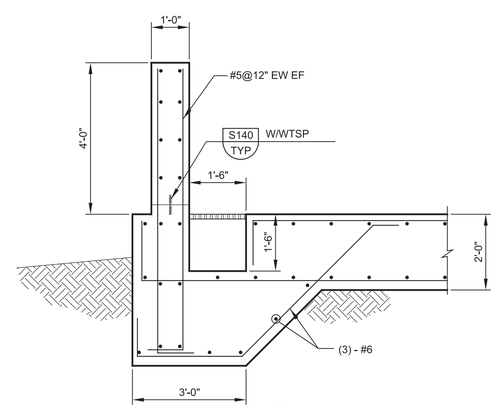

BH 25S20 **SECTION**
SCALE: 1/2" = 1'-0"
FILE: 10024A1025S0422

GENERAL NOTES:

1. SHALLOW FOUNDATIONS FOR THE CHEMICAL BULK STORAGE BUILDING SHALL CONSIST OF MINIMUM OF 24-INCHES OF AGGREGATE BASE.

KEY NOTES:

1. HEIGHT TO SUIT EQUIPMENT FURNISHED OR AS INDICATED ON THE DRAWINGS
2. PROVIDE HOOPS OR CORNERS PER DETAIL S144/TYP
3. PROVIDE TIES WITH YIELD STRENGTH OF 80,000 PSI (ASTM615 GR 80)
4. TIE ENDS SHALL TERMINATE WITH 135 DEGREE MINIMUM STANDARD HOOKS AND ENGAGE A LONGITUDINAL BAR WITH 6" MINIMUM OVERLAP. ENDS OF ADJACENT CIRCULAR TIES SHALL BE STAGGERED AROUND THE PERIMETER ENCLOSING THE LONGITUDINAL BAR.
5. CROSS BRACING CONSISTS OF L4x4x1/2 DOUBLE ANGLES. (1)

REV	DATE	BY	DESCRIPTION
1	11-04-20	KP	REVISED PER ADDENDUM NO. 3

DESIGNED KVP
DRAWN JBB
CHECKED MD
DATE SEPTEMBER 2020

Digitally signed by Kaushik V. Punyamurtula
Contact Info: Carollo Engineers
Date: 2020.11.04 19:27:31-08'00'

REGISTERED PROFESSIONAL ENGINEER KAUSHIK V. PUNYAMURTULA No. 83261 CIVIL STATE OF CALIFORNIA

carollo

ANTIOCH CALIFORNIA OPPORTUNITY LIVES·HERE

CITY OF ANTIOCH
ANTIOCH BRACKISH WATER DESALINATION PROJECT
STRUCTURAL
CHEMICAL STORAGE BUILDING
SECTIONS

VERIFY SCALES
BAR IS ONE INCH ON ORIGINAL DRAWING
0 1"
IF NOT ONE INCH ON THIS SHEET, ADJUST SCALES ACCORDINGLY

JOB NO. 10024A.10
DRAWING NO. 25S24
SHEET NO. 162 OF 498

Plot Date: 04-NOV-2020 4:02:18 PM
User: svcPW
PlotScale: 1:1
DesignScript: Carollo_Std_Pen_v0905.pen
ColorTable: gshade.ctb
Model: Layout1
LAST SAVED BY: tumadhay

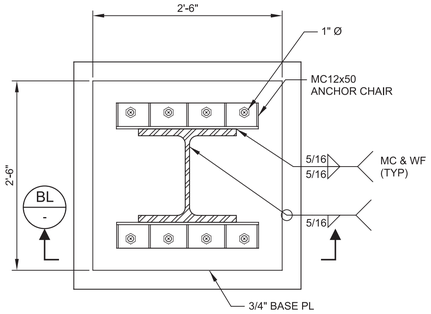

52 DETAIL
25S20
SCALE: 1"=1'-0"
FILE: 10024A1025S0422

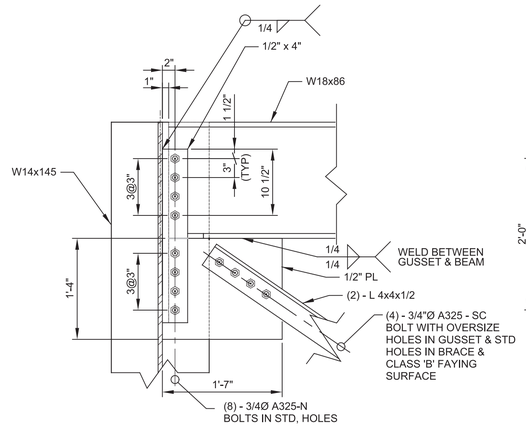

53 DETAIL
25S22
SCALE: 1"=1'-0"
FILE: 10024A1025S0422

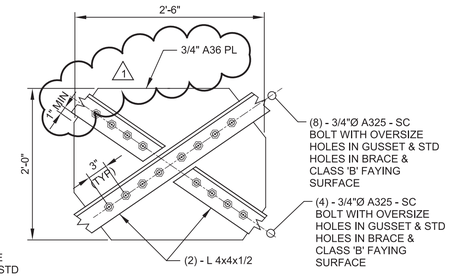

54 DETAIL
25S22
SCALE: 1"=1'-0"
FILE: 10024A1025S0422

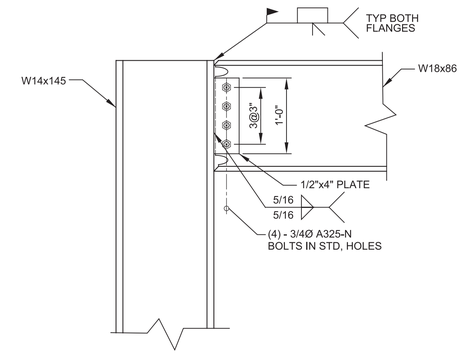

55 DETAIL
25S21
SCALE: 1"=1'-0"
FILE: 10024A1025S0422

GENERAL NOTES:

1. SHALLOW FOUNDATIONS FOR THE REVERSE OSMOSIS BUILDING SHOULD BE UNDERLAIN BY A MINIMUM OF 24-INCHES OF AGGREGATE BASE WHERE SOIL IS EXPOSED IN THE BUILDING SUBGRADE. WHERE ROCK IS EXPOSED IN THE BUILDING SUBGRADE, THE SHALLOW FOUNDATIONS SHOULD BE UNDERLAIN BY A MINIMUM OF 6-INCHES OF AGGREGATE BASE.
2. NOTE ALL BOLTS AND STEEL FRAMING TO BE HOT DIPPED GALVANIZED.

KEY NOTES:

1. PROVIDE SHEAR LUGS IN BOTH DIRECTIONS. MOVE ANCHOR REINF WITHIN THE PRESCRIBED TOLERANCES TO ACCOMODATE SHEAR LUGS, SEE DETAIL 60 ON SHEET 25S26
2. PROVIDE TIES WITH YIELD STRENGTH OF 80,000 PSI (ASTM615 GR 80)
3. TIE ENDS SHALL TERMINATE WITH 135 DEGREE MINIMUM STANDARD HOOKS AND ENGAGE A LONGITUDINAL BAR WITH 6" MINIMUM OVERLAP. ENDS OF ADJACENT CIRCULAR TIES SHALL BE STAGGERED AROUND THE PERIMETER ENCLOSING THE LONGITUDINAL BAR

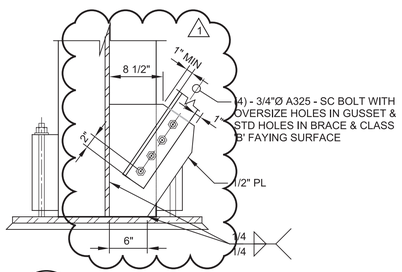

56 DETAIL
25S22
SCALE: 1"=1'-0"
FILE: 10024A1025S0422

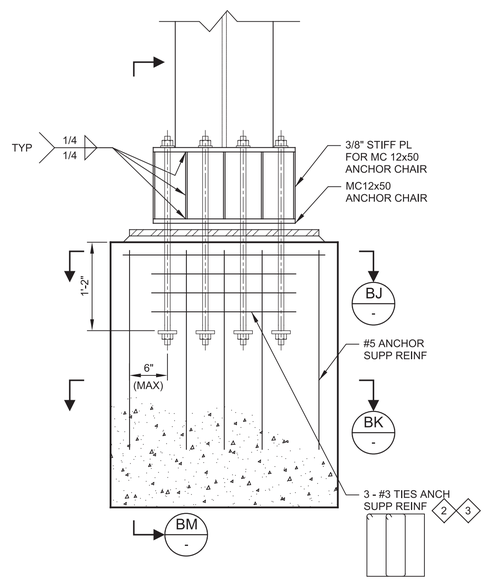

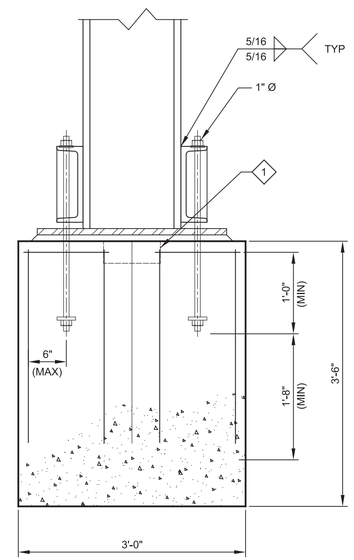

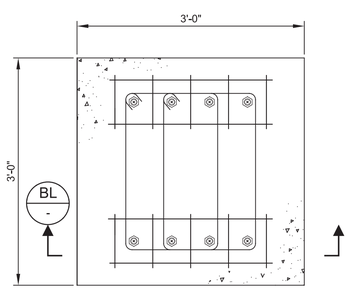

BJ SECTION
-
SCALE: 1"=1'-0"
FILE: 10024A1025S0422

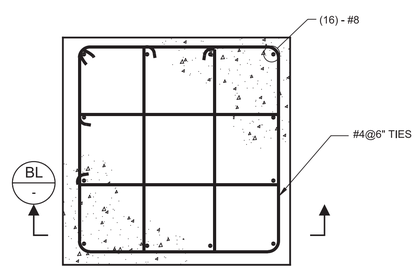

BK SECTION
-
SCALE: 1"=1'-0"
FILE: 10024A1025S0422

BL SECTION
-
SCALE: 1"=1'-0"
FILE: 10024A1025S0422

BM SECTION
-
SCALE: 1"=1'-0"
FILE: 10024A1025S0422

REV	DATE	BY	DESCRIPTION
1	11-04-20	KP	REVISED PER ADDENDUM NO. 3

DESIGNED KVP
DRAWN TU
CHECKED MD
DATE SEPTEMBER 2020

Digitally signed by Kaushik V. Punyamurtula
Contact Info: Carollo Engineers
Date: 2020.11.04 19:28:06-08'00'
Kaushik V. Punyamurtula

REGISTERED PROFESSIONAL ENGINEER
KAUSHIK V. PUNYAMURTULA
No. 83261
CIVIL
STATE OF CALIFORNIA

carollo

ANTIOCH CALIFORNIA
OPPORTUNITY LIVES·HERE

CITY OF ANTIOCH
ANTIOCH BRACKISH WATER DESALINATION PROJECT
STRUCTURAL
CHEMICAL STORAGE BUILDING
SECTIONS AND DETAILS

VERIFY SCALES
BAR IS ONE INCH ON ORIGINAL DRAWING
0 1"
IF NOT ONE INCH ON THIS SHEET, ADJUST SCALES ACCORDINGLY

JOB NO. 10024A.10
DRAWING NO. 25S25
SHEET NO. 163 OF 498

Plot Date: 04-NOV-2020 4:01:09 PM
User: svcPW
Model: Layout1 ColorTable: gshade.ctb DesignScript: Carollo_Std_Pen_v0905.pen PlotScale: 1:1
LAST SAVED BY: tumadhay

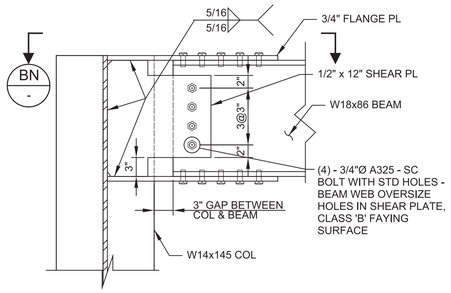

57 DETAIL
25S21
SCALE: 1"=1'-0"
FILE: 10024A1025S0422

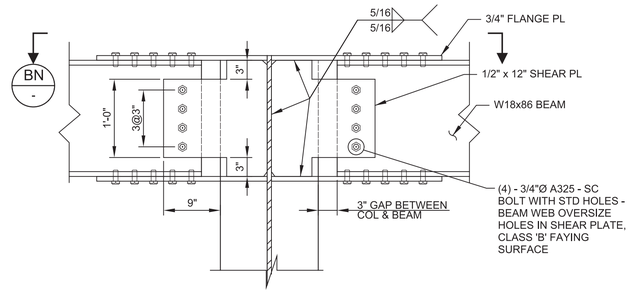

58 DETAIL
25S21
SCALE: 1"=1'-0"
FILE: 10024A1025S0422

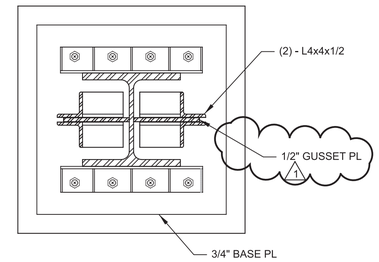

59 DETAIL
25S20
SCALE: 1"=1'-0"
FILE: 10024A1025S0422

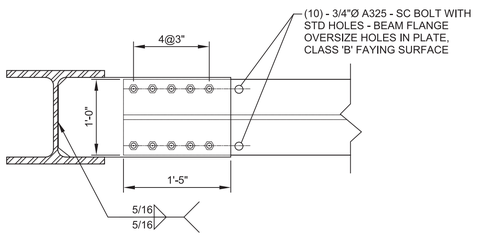

BN SECTION
-
SCALE: 1"=1'-0"
FILE: 10024A1025S0422

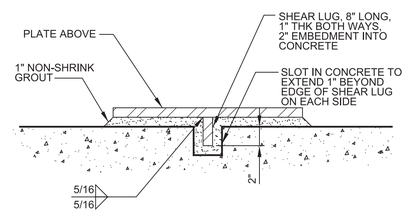

60 DETAIL
25S25
SCALE: 1"=1'-0"
FILE: 10024A1025S0422

REV	DATE	BY	DESCRIPTION
1	11-04-20	KP	REVISED PER ADDENDUM NO. 3

DESIGNED KVP
DRAWN TU
CHECKED MD
DATE SEPTEMBER 2020

Digitally signed by Kaushik V. Punyamurtula
Contact Info: Carollo Engineers
Date: 2020.11.04 19:28:27-08'00'

REGISTERED PROFESSIONAL ENGINEER KAUSHIK V. PUNYAMURTULA No. 83261 CIVIL STATE OF CALIFORNIA

carollo®

ANTIOCH CALIFORNIA OPPORTUNITY LIVES·HERE

CITY OF ANTIOCH
ANTIOCH BRACKISH WATER DESALINATION PROJECT
STRUCTURAL
CHEMICAL STORAGE BUILDING
SECTION AND DETAILS

VERIFY SCALES
BAR IS ONE INCH ON ORIGINAL DRAWING
0 1"
IF NOT ONE INCH ON THIS SHEET, ADJUST SCALES ACCORDINGLY

JOB NO. 10024A.10
DRAWING NO. 25S26
SHEET NO. 164 OF 498

PROJECT NO. 10024A10 FILE NAME: 10024A1025S26.dgn

LAST SAVED BY: tumadhay
Model: Layout1 ColorTable: gshade.ctb DesignScript: Carollo_Std_Pen_v0905.pen PlotScale: 1:1
User: svcPW Plot Date: 04-NOV-2020 3:59:39 PM

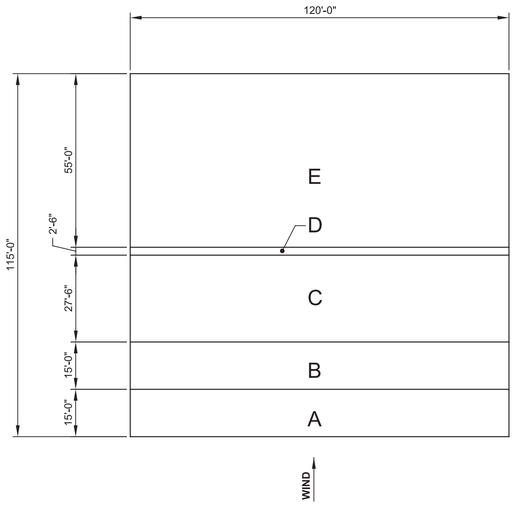

ZONE	REF. HEIGHT (FT)	EXT PRESSURE COEFFICIENT Cpe	PEAK VELOCITY PRESSURE Qp (PSF)	PRESSURE P (PSF)
A (-ve)	30.00	- 0.90	38.08	-50.5
B (-ve)	30.00	- 0.90	38.08	-50.5
C (-ve)	30.00	- 0.50	38.08	-37.5
D (-ve)	30.00	- 0.50	38.08	-37.5
E (-ve)	30.00	- 0.30	38.08	-31.0

NOTE:
NEGATIVE INDICATES PRESSURE ACTING AWAY FROM SURFACE AND POSITIVE INDICATES PRESSURE ACTING TOWARDS THE SURFACE.

ROOF - WIND-LOADING DIAGRAM

61 DETAIL
SCALE: NO SCALE
FILE: 10024A1025S422

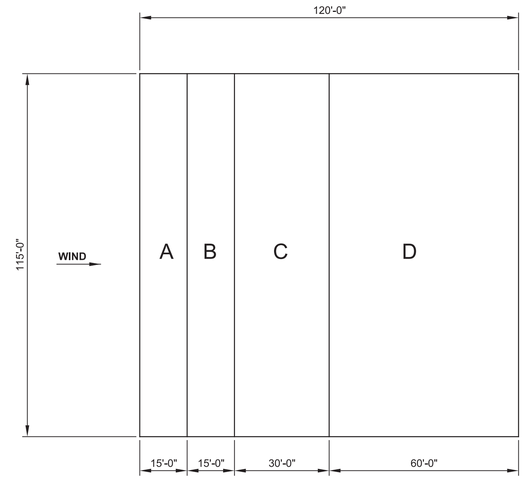

ZONE	REF. HEIGHT (FT)	EXT PRESSURE COEFFICIENT Cpe	PEAK VELOCITY PRESSURE Qp (PSF)	PRESSURE P (PSF)
A (-ve)	30.00	- 0.90	38.08	-50.39
B (-ve)	30.00	- 0.90	38.08	-50.39
C (-ve)	30.00	- 0.50	38.08	-37.30
D (-ve)	30.00	- 0.30	38.08	-30.76

NOTE:
NEGATIVE INDICATES PRESSURE ACTING AWAY FROM SURFACE AND POSITIVE INDICATES PRESSURE ACTING TOWARDS THE SURFACE.

GENERAL NOTES:

1. ALL LOADS ARE AT STRENGTH LEVEL
2. CONSIDER DEAD LOAD FOR 15 PSF AND LIVE LOAD OF 20 PSF
3. MAXIMUM LIVE LOAD DEFLECTION L/360.
4. POINT ON THE JOIST OR BETWEEN ANY TWO PANEL POINTS ON THE TOP OR BOTTOM CHORDS. THE JOIST AND GIRDER SHOULD BE DESIGNED FOR A SINGLE 300 LB DEAD LOAD THAT MAY OCCUR AT ANY PANEL THIS IS INTENDED TO INCREASE THE OVERALL LOADING ON THE JOIST AND GIRDER BY 300 LBS WHICH MAY OCCUR AT ONE LOCATION ANYWHERE ON THE JOIST AND GIRDER .
5. ONE END OF TRUSS GIRDER WILL BE ATTACHED TO HSS 12X12X3/4 COLUMN AND OTHER END WILL REST ON MASONRY WALL.
6. REFER TO DRAWING 25S02 AND 25S08 FOR END CONNECTION DETAILS.
7. FOR PROFILE OF THE GIRDER REFER TO DESIGN DRAWINGS 25S02 TO 25S08.
8. MAXIMUM DEPTH OF THE GIRDER IS RESTRICTED TO 60 INCHES.
9. MAXIMUM DEPTH OF THE JOIST IS RESTRICTED TO 28 INCHES
10. PROVIDE BRIDGING AS REQUIRED.
11. AXIAL SEISMIC FORCE (STRENGTH LEVEL) FOR TRUSS GIRDER = 60 KIPS
12. AXIAL SEISMIC FORCE (STRENGTH LEVEL) FOR JOIST = 8 KIPS .
13. SUBMIT CALCULATIONS AND DRAWINGS FOR ENGINEERING REVIEW.

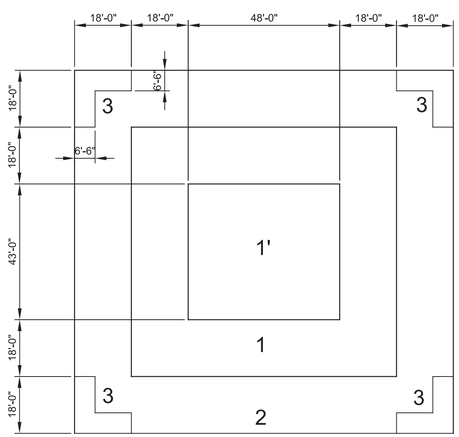

ROOF- COMPONENTS AND CLADDING WIND LOADING DIAGRAM

62 DETAIL
SCALE: NO SCALE
FILE: 10024A1025S422

COMPONENT	ZONE	PRES (+ve) (PSF)	PRES (-ve) (PSF)
<=10 SF	1	18.1	-48.0
100 SF	1	16.0	-39.2
200 SF	1	16.0	-36.5
>500 SF	1	16.0	-33.1
<=+10 SF	1'	18.1	-30.9
100 SF	1'	16.0	-30.9
500 SF	1'	16.0	-23.5
>1000 SF	1'	16.0	-20.3
<=10 SF	2	30.9	-60.8
100 SF	2	27.5	-49.5
200 SF	2	26.5	-46.1
>500 SF	2	25.2	-41.6
<=10 SF	3	30.9	-60.8
100 SF	3	27.5	-49.5
200 SF	3	26.5	-46.1
>500 SF	3	25.2	-41.6

NOTE:
NEGATIVE INDICATES PRESSURE ACTING AWAY FROM SURFACE AND POSITIVE INDICATES PRESSURE ACTING TOWARDS THE SURFACE.

REV	DATE	BY	DESCRIPTION
1	11-04-20	KP	REVISED PER ADDENDUM NO. 3

DESIGNED KVP
DRAWN TU
CHECKED MD
DATE SEPTEMBER 2020

Digitally signed by Kaushik V. Punyamurtula
Contact Info: Carollo Engineers
Date: 2020.11.04 19:28:16-08'00'

REGISTERED PROFESSIONAL ENGINEER KAUSHIK V. PUNYAMURTULA No. 83261 CIVIL STATE OF CALIFORNIA

carollo®

ANTIOCH CALIFORNIA OPPORTUNITY LIVES·HERE

CITY OF ANTIOCH
ANTIOCH BRACKISH WATER DESALINATION PROJECT
STRUCTURAL
RO BUILDING
ROOF LOAD DIAGRAM

VERIFY SCALES
BAR IS ONE INCH ON ORIGINAL DRAWING
0 1"
IF NOT ONE INCH ON THIS SHEET, ADJUST SCALES ACCORDINGLY

JOB NO. 10024A.10
DRAWING NO. 25S27
SHEET NO. 165 OF 498

LAST SAVED BY: tumadhay
Model: Layout1 ColorTable: gshade.ctb DesignScript: Carollo_Std_Pen_v0905.pen PlotScale: 1:1
User: svcPW Plot Date: 04-NOV-2020 3:54:14 PM

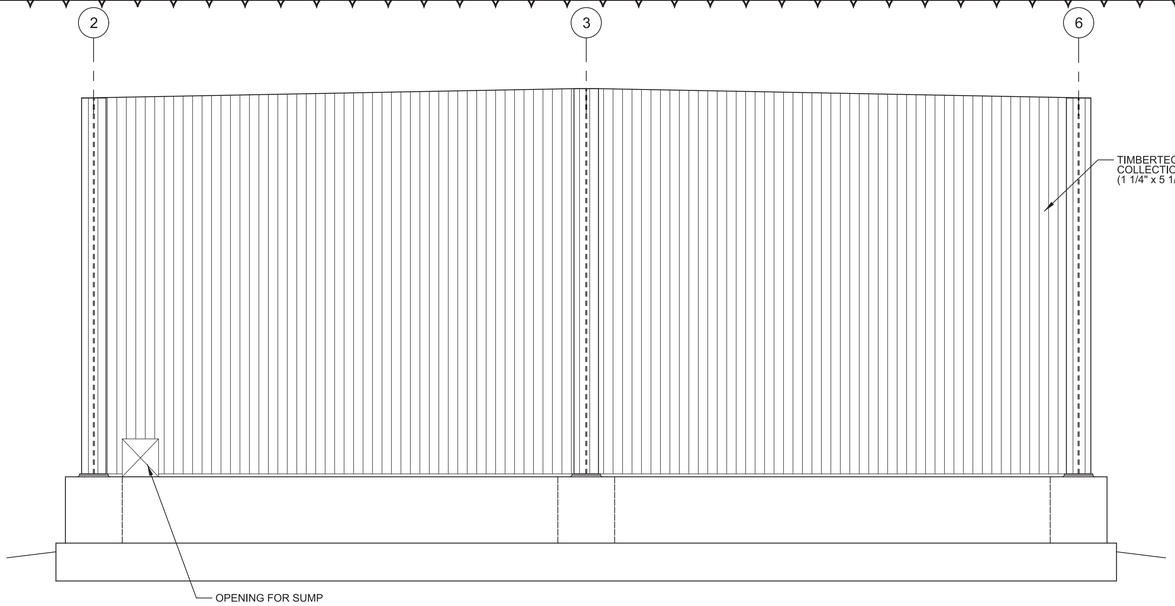

A NORTH ELEVATION

SCALE: 1/4"=1'-0"
FILE: 10024A1025S0326

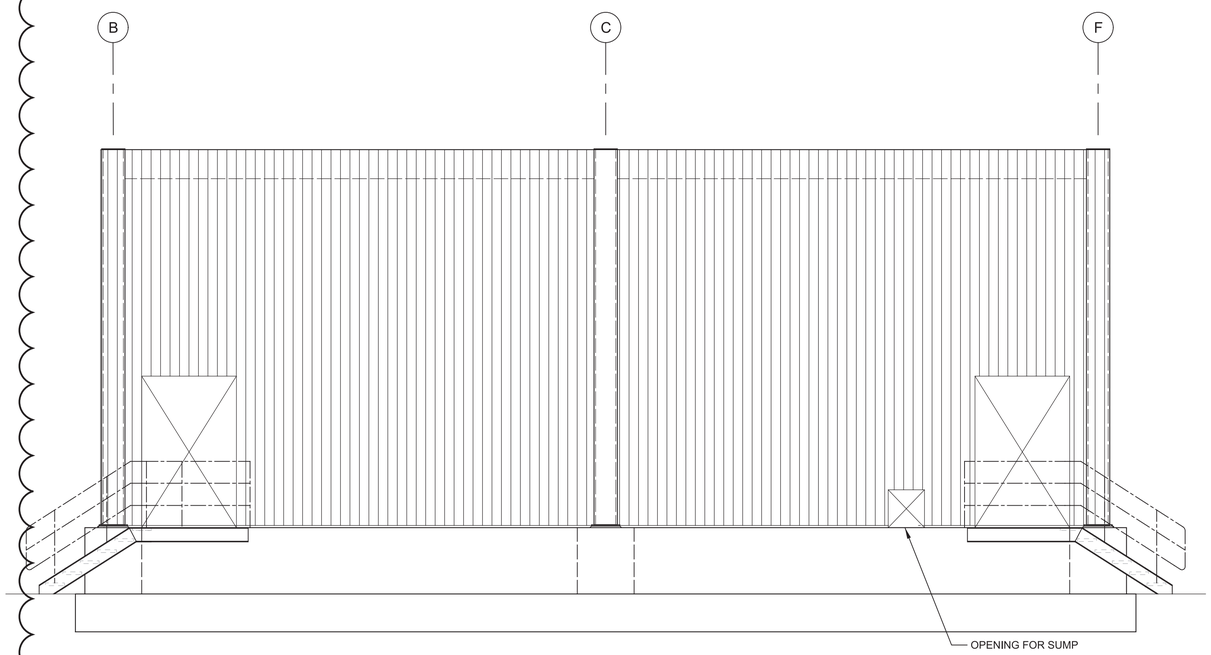

B WEST ELEVATION

SCALE: 1/4"=1'-0"
FILE: 10024A1025S0326

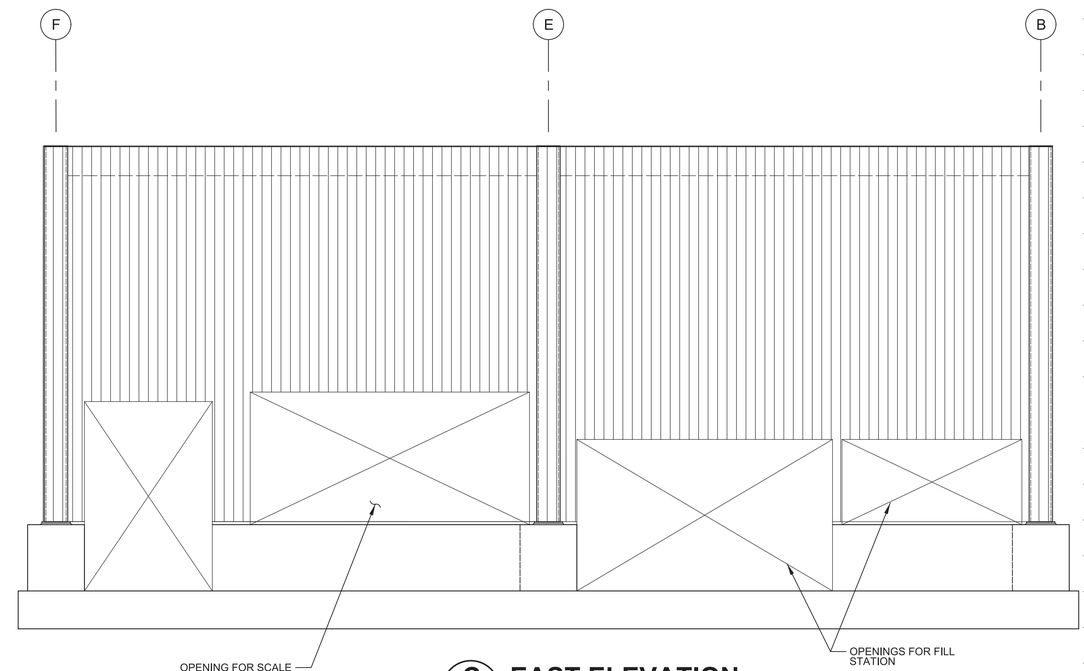

C EAST ELEVATION

SCALE: 1/4"=1'-0"
FILE: 10024A1025S0326

GENERAL NOTES:

1. FOR STRUCTURAL DETAILS AND PLAN REFER TO DRAWING 25S20 THRU 25S26.
2. SIDING IS CONSIDERED TO CONSISIT OF WOODEN SIDING (PLANKS) WITH 1.5 INCH GAS IN BETWEEN THE PLANKS.
3. CONTRACTOR TO DESIGN AND DETAIL SUPPORT FRAMING FOR SIDING (GIRTS), THEIR CONNECTION TO STRUCTURAL MEMBERS, SIDING CONNECTION DETAILS.
4. ALL METAL FRAMING SHALL BE HOT DIPPED GALVANIZED.
5. SIDING SYSTEM SHALL BE MANUFACTURED BY "TIMBERTECH" OR EQUAL.

REV	DATE	BY	DESCRIPTION
1	11-04-20	KP	REVISED PER ADDENDUM NO. 3

DESIGNED KVP
DRAWN TU
CHECKED MD
DATE SEPTEMBER 2020

Digitally signed by Kaushik V. Punyamurtula
Contact Info: Carollo Engineers
Date: 2020.11.04 19:29:42-08'00'

REGISTERED PROFESSIONAL ENGINEER KAUSHIK V. PUNYAMURTULA No. 83261 CIVIL STATE OF CALIFORNIA

carollo

ANTIOCH CALIFORNIA OPPORTUNITY LIVES·HERE

CITY OF ANTIOCH
ANTIOCH BRACKISH WATER DESALINATION PROJECT
STRUCTURAL
CHEMICAL STORAGE BUILDING SIDING DETAILS

VERIFY SCALES
BAR IS ONE INCH ON ORIGINAL DRAWING
0 1"
IF NOT ONE INCH ON THIS SHEET, ADJUST SCALES ACCORDINGLY

JOB NO. 10024A.10
DRAWING NO. 25S28
SHEET NO. 166 OF 498

PROJECT NO. 10024A10 FILE NAME: 10024A1025S28.dgn

Model: Layout1 ColorTable: gshade.ctb DesignScript: Carollo_Std_Pen_v0905.pen PlotScale: 1:1 Plot Date: 04-NOV-2020 3:58:10 PM User: svcPW LAST SAVED BY: tumadhay

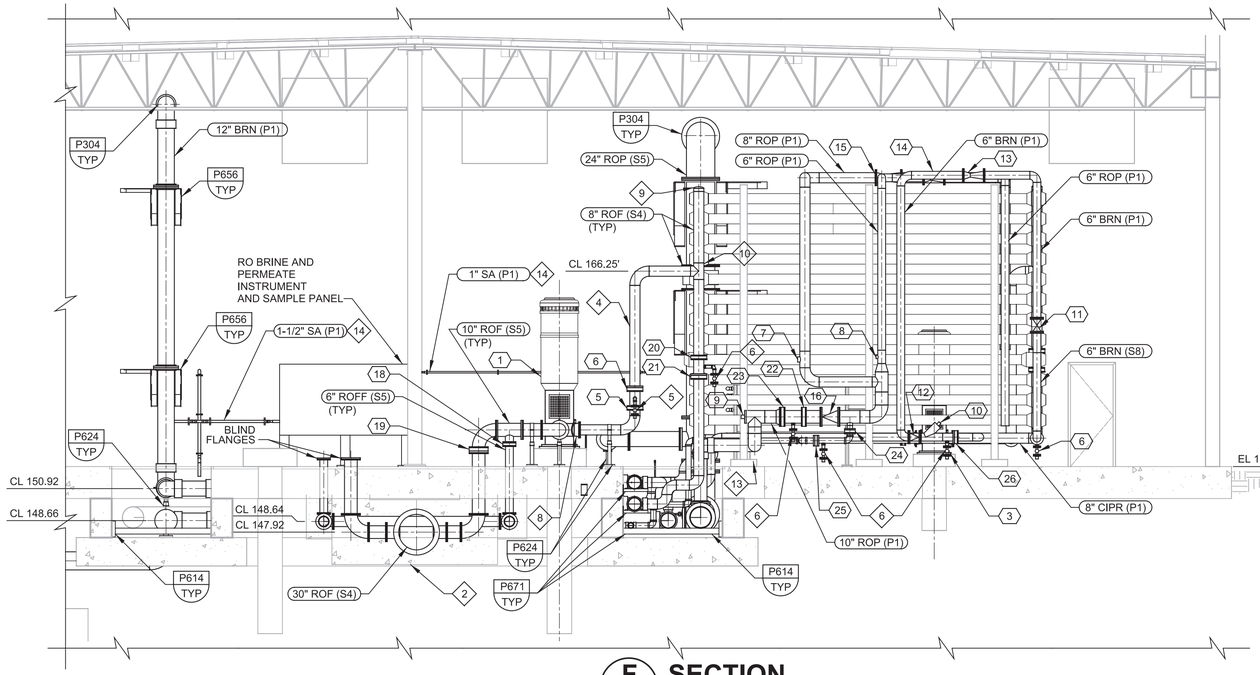

F SECTION
25M01
SCALE: 3/16"=1'-0"
FILE: 10024A1025M0300

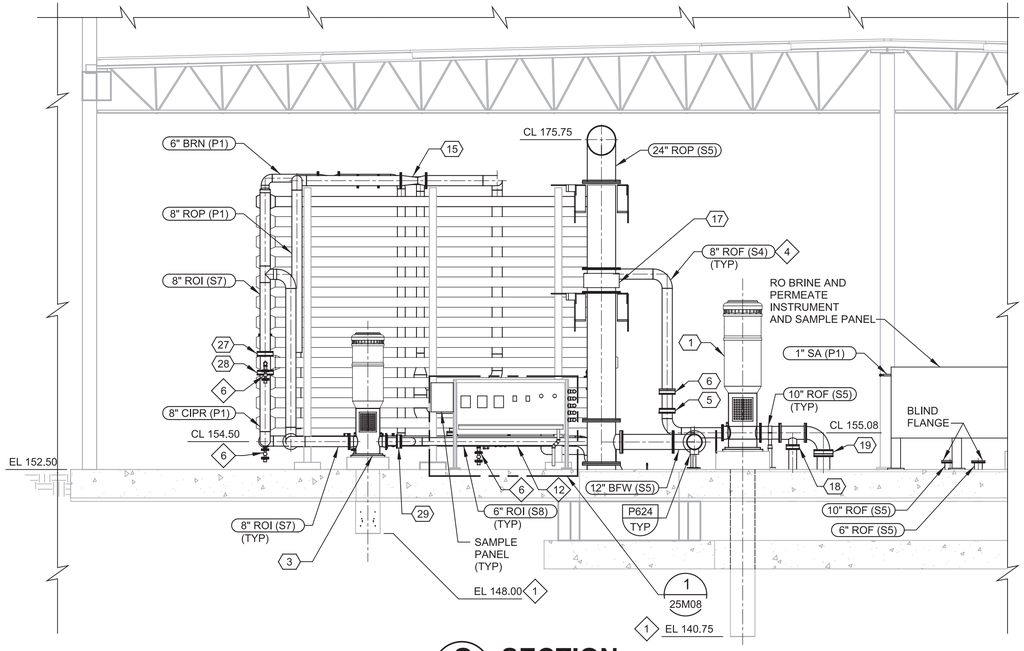

G SECTION
25M01
SCALE: 3/16"=1'-0"
FILE: 10024A1025M0301

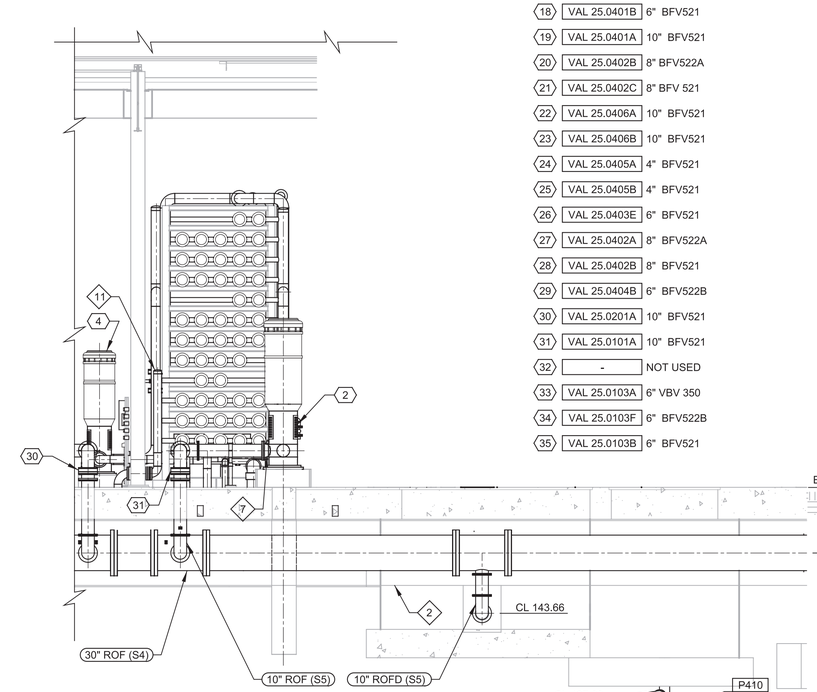

H SECTION
25M01
SCALE: 3/16"=1'-0"
FILE: 10024A1025M0302

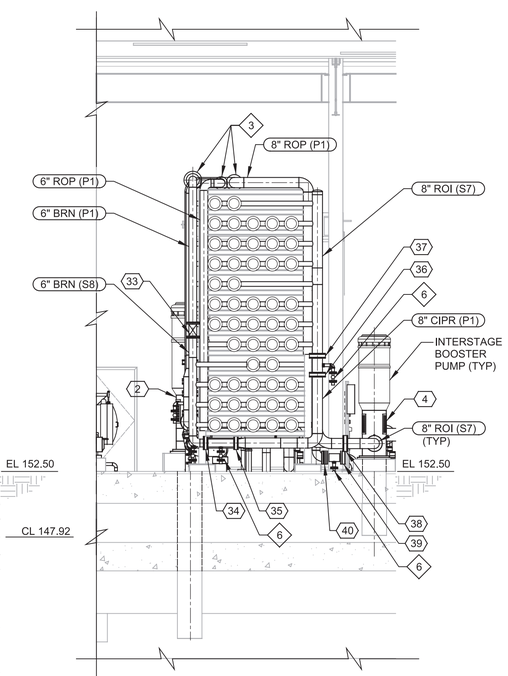

J SECTION
25M01
SCALE: 3/16"=1'-0"
FILE: 10024A1025M0303

KEY TAGS (CONTINUED):

36	VAL 25.0102D	8" BFV521
37	VAL 25.0102A	8" BFV522A
38	VAL 25.0104A	8" BFV522A
39	VAL 25.0102C	6" BFV521
40	VAL 25.0102B	6" BFV522B

KEY NOTES (CONTINUED):

12. FURNISH AND INSTALL TAP IN ROI PIPE FOR PRESSURE GAUGE AND PRESSURE TRANSMITTER. ROUTE 1/4" SA (T5) TO RO TRAIN SAMPLE PANEL. REFER TO SAMPLE PANEL DETAIL AND INSTRUMENTATION DWGS FOR RANGE AND MOUNTING DETAILS.
13. FURNISH AND INSTALL SAMPLE TAP. ROUTE 1/4" VNT (T2) TO RO TRAIN SAMPLE PANEL. REFER TO SAMPLE PANEL DETAIL FOR DESTINATION, TAP DETAILS AND LABEL INSTRUCTIONS.
14. ROUTE SAMPLE LINE TO THE RO BRINE AND PERMEATE INSTRUMENT SAMPLE PANEL. SECURE SAMPLE LINE TO INTERIOR WALL PER P664/TYP WITH PIPE SUPPORTS SPACED 4 FEET APART.

KEY TAGS:

1	PMP 25.0401	RO TRAIN NO. 4 FEED PUMP
2	PMP 25.0101	RO TRAIN NO. 1 FEED PUMP
3	PMP 25.0404	RO TRAIN NO. 4 INTERSTAGE BOOSTER PUMP
4	PMP 25.0104	RO TRAIN NO. 4 FEED PUMP
5	VAL 25.0401C	8" BFV 522A
6	VAL 25.0401D	8" BFV 522A
7	AE 25.0402	FIRST STAGE PERMEATE CONDUCTIVITY METER
8	AE 25.0402	SECOND STAGE PERMEATE CONDUCTIVITY METER
9	AE 25.0402	COMBINED PERMEATE CONDUCTIVITY METER
10	AE 25.0403A	BRINE CONDUCTIVITY METER
11	VAL 25.0403B	6" VBV350
12	VAL 25.0403C	6" CV631 (1)
13	FE 25.0403C	BRINE FLOW METER
14	FE 25.0403A	SECOND STAGE PERMEATE FLOW METER
15	FE 25.0402	FIRST STAGE PERMEATE FLOW METER
16	VAL 25.0403G	10" CV631 (1)
17	FE 26.0301B	BLENDED RO PERMEATE FLOW METER
18	VAL 25.0401B	6" BFV521
19	VAL 25.0401A	10" BFV521
20	VAL 25.0402B	8" BFV522A
21	VAL 25.0402C	8" BFV 521
22	VAL 25.0406A	10" BFV521
23	VAL 25.0406B	10" BFV521
24	VAL 25.0405A	4" BFV521
25	VAL 25.0405B	4" BFV521
26	VAL 25.0403E	6" BFV521
27	VAL 25.0402A	8" BFV522A
28	VAL 25.0402B	8" BFV521
29	VAL 25.0404B	6" BFV522B
30	VAL 25.0201A	10" BFV521
31	VAL 25.0101A	10" BFV521
32	-	NOT USED
33	VAL 25.0103A	6" VBV 350
34	VAL 25.0103F	6" BFV522B
35	VAL 25.0103B	6" BFV521

GENERAL NOTES:

1. VALVE QUANTITY, SIZE, MATERIAL, TYPE, AND PLACEMENT ARE IDENTICAL ON EACH RO TRAIN. INFORMATION ASSOCIATED WITH VALVE KEY TAGS IDENTIFIED ON THE RO TRAINS SHOWN ON THIS DRAWING APPLY TO ALL RO TRAINS.

KEY NOTES:

1. FINAL ELEVATION TO BE DETERMINED BASED ON PUMP SELECTION, MANUFACTURER RECOMMENDATIONS, AND HI STANDARDS.
2. ENCASE PIPING UNDER STRUCTURE IN CONCRETE PER TYPICAL DETAIL CP119/TYP.
3. FURNISH AND INSTALL SAMPLE TAPS FOR STAGE 1 PERMEATE (1/4" SA (T2)), STAGE 2 PERMEATE (1/4" SA (T2)), AND BRINE (1/4" SA (T5). TAPS WILL BE LOCATED ON TOP OF THE PIPING RUNNING ALONG THE TOP OF THE ROMS AND ALLOW THE SAMPLE TAPS TO ALSO SERVE AS AIR BLEEDS. ROUTE SA LINES TO RO TRAIN SAMPLE PANEL. REFER TO SAMPLE PANEL DETAIL FOR DESTINATION, TAP DETAILS AND LABEL INSTRUCTIONS.
4. ROMSS SHALL SUPPORT THIS ROF PIPE OFF THE ROMS FRAME.
5. 2" BV305.
6. 2" BV320.
7. TAP FOR SUCTION INSTRUMENTS ON PUMP HEAD: PSL 25.0201, FSL 25.0201, PI 25.0201A, AND PI 25.0201B. USE 1/2" BV305 FOR INSTRUMENTS WHERE SHOWN ON P&IDS. TYPICAL FOR ALL TRAINS. SUPPORT INSTRUMENTS USING M723/TYP.
8. TAP FOR DISCHARGE INSTRUMENTS ON PUMP HEAD: PSL 25.0401, FSL 25.0401, PI 25.0401A, AND PI 25.0401B. USE 1/2" BV305 FOR INSTRUMENTS WHERE SHOWN ON P&IDS. TYPICAL FOR ALL TRAINS. SUPPORT INSTRUMENTS USING M723/TYP.
9. FURNISH AND INSTALL SAMPLE TAP. ROUTE 1/4" VNT (T5) TO RO TRAIN SAMPLE PANEL. REFER TO SAMPLE PANEL DETAIL FOR DESTINATION, TAP DETAILS AND LABEL INSTRUCTIONS.
10. FURNISH AND INSTALL TAP FOR PRESSURE GAUGE AND PRESSURE TRANSMITTER. ROUTE 1/4" SA (T5) TO RO TRAIN SAMPLE PANEL. REFER TO SAMPLE PANEL DETAIL AND INSTRUMENTATION DWGS FOR RANGE AND MOUNTING DETAILS.
11. FURNISH AND INSTALL SAMPLE TAP. ROUTE 1/4" VNT (T5) TO RO TRAIN SAMPLE PANEL. REFER TO SAMPLE PANEL DETAIL FOR DESTINATION, TAP DETAILS AND LABEL INSTRUCTIONS.

REV	DATE	BY	DESCRIPTION
1	11-04-20	KF	REVISED PER ADDENDUM NO. 3

DESIGNED KF
DRAWN GL
CHECKED BY
DATE SEPTEMBER 2020

Digitally signed by Scott C. Weddle
Contact Info: Carollo Engineers, Inc.
Date: 2020.11.04 16:54:09-08'00'

REGISTERED PROFESSIONAL ENGINEER SCOTT CLARK WEDDLE No. 49851 CIVIL STATE OF CALIFORNIA

carollo

ANTIOCH CALIFORNIA OPPORTUNITY LIVES·HERE

CITY OF ANTIOCH
ANTIOCH BRACKISH WATER DESALINATION PROJECT
MECHANICAL
RO FACILITY SECTIONS

VERIFY SCALES
BAR IS ONE INCH ON ORIGINAL DRAWING
0 1"
IF NOT ONE INCH ON THIS SHEET, ADJUST SCALES ACCORDINGLY

JOB NO. 10024A.10
DRAWING NO. 25M05
SHEET NO. 182 OF 498

Plot Date: 29-OCT-2020 3:34:41 PM
User: svcPW
PlotScale: 1:1
DesignScript: Carollo_Std_Pen_v0905.pen
ColorTable: gshade.ctb
Model: Layout1
LAST SAVED BY: gleal

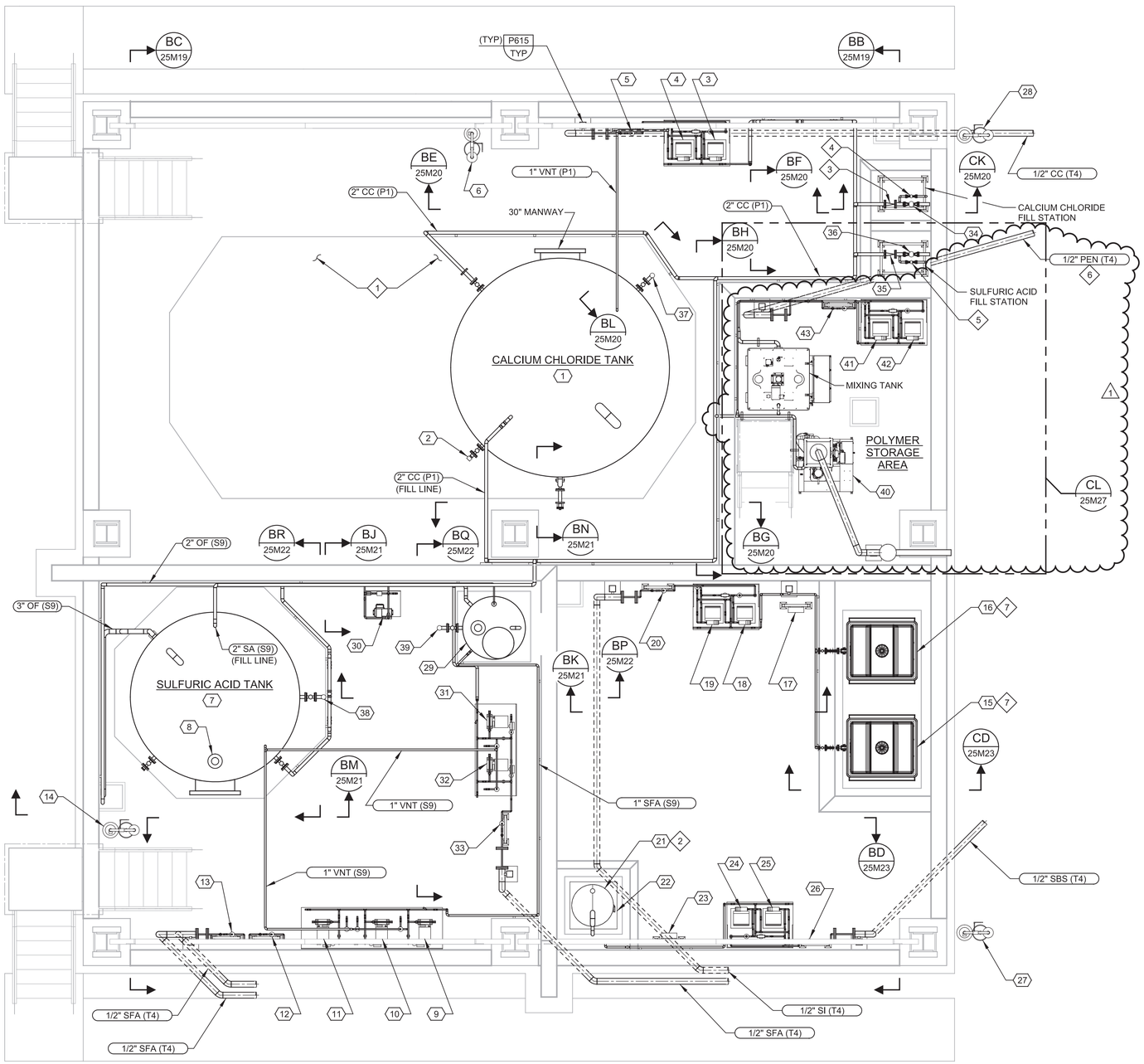

BA PLAN

SCALE: 1/4" = 1'-0"
FILE: 10024A1025M0107

GENERAL NOTES:

1. ENCASE PIPING UNDER STRUCTURE IN CONCRETE PER TYPICAL DETAIL CP119/TYP.
2. HEAT TRACE SBS AND SI PIPING.
3. COAT ALL CONCRETE SURFACES INSIDE CHEMICAL STORAGE AREA WITH VINYL ESTER COATING PER SECTION 09960. COAT INSIDE WALL SURFACES, TOP OF WALL SURFACES, SUMP AREA, TANK FILL AREA, EQUIPMENT PADS, TANK PADS, AND FLOOR. CONCRETE FLOOR SURFACE TO HAVE A NONSKID SURFACE.
4. ALL BALL VALVES IN THE CALCIUM CHLORIDE AREA ARE BV 320 UNLESS OTHERWISE NOTED. SEE P&IDS FOR VALVE TAGS AND SIZES.
5. ALL BALL VALVES IN THE SODIUM BISULFITE AREA ARE BV 320 UNLESS OTHERWISE NOTED. SEE P&IDS FOR VALVE TAGS AND SIZES.
6. ALL BALL VALVES IN THE SCALE INHIBITOR AREA ARE BV 320 UNLESS OTHERWISE NOTED. SEE P&IDS FOR VALVE TAGS AND SIZES.
7. ALL BALL VALVES IN THE SULFURIC ACID AREA ARE BV 305 UNLESS OTHERWISE NOTED. SEE P&IDS FOR VALVE TAGS AND SIZES.

KEY NOTES:

1. COORDINATE NOTCH IN CONCRETE WITH TANK MANUFACTURER. SIZE NOTCH DIMENSIONS AND DEPTH TO ACCOMMODATE TANK OUTLET AND FITTINGS. ALSO CREATE NOTCHES NECESSARY TO ACCOMMODATE A FUTURE CALCIUM CHLORIDE TANK THAT WILL MIRROR THE TANK INCLUDED IN THIS PROJECT.
2. PROVIDE AN ELECTRIC HEATING BLANKET MANUFACTURED BY POWERBLANKET, OR EQUAL, THAT PROVIDES FULL COVERAGE OF THE SODIUM BISULFITE DAY TANK. SIZE THE BLANKET BASED ON THE DIMENSIONS OF THE DAY TANK WITH CUTOUTS FOR THE TANKS PIPING AND OTHER APPURTENANCES. HEATING BLANKET TO HEAT THE CONTENTS OF THE DAY TANK BETWEEN 70-100 DEG F. VOLTAGE FOR THE BLANKET SHALL BE 120 VAC. BLANKET TO INCLUDE INTERNAL THERMOSTAT, HAVE AN OUTER COVERING MADE OF VINYL, AND A NEMA 5-20 PLUG.
3. 2" CV 633.
4. 1" BV 320.
5. 1" BV 305.
6. ROUTE CARRIER TUBE AND CONTAINMENT PIPE TO THE ALUM CONTAINMENT PIPE. CONNECT THE POLYMER CONTAINMENT PIPE TO THE ALUM CONTAINMENT PIPE. THE POLYMER CARRIER TUBE WILL RUN INSIDE THE SAME CONTAINMENT PIPE AS THE ALUM CARRIER TUBE. REFER TO DRAWING 25C03 FOR CONNECTION LOCATION. (1)
7. PROVIDE AN ELECTRIC HEATING BLANKET MANUFACTURED BY POWERBLANKET, OR EQUAL, THAT PROVIDES FULL COVERAGE OF EACH SCALE INHIBITOR TOTE. INCLUDE CUTOUTS FOR THE TOTES PIPING AND OTHER APPURTENANCES. HEATING BLANKET TO HEAT THE CONTENTS OF THE TOTE BETWEEN 70-100 DEG F. VOLTAGE FOR THE BLANKET SHALL BE 120 VAC. BLANKET TO INCLUDE INTERNAL THERMOSTAT, HAVE AN OUTER COVERING MADE OF VINYL, AND A NEMA 5-20 PLUG.

KEY TAGS:

1	TNK 66.0901	CALCIUM CHLORIDE TANK NO. 1
2	LE 66.0901	CALCIUM CHLORIDE TANK LEVEL INDICATING TRANSMITTER
3	PMP 66.0901	CALCIUM CHLORIDE PUMP NO. 1
4	PMP 66.0902	CALCIUM CHLORIDE PUMP NO. 2
5	FE 66.0901	CALCIUM CHLORIDE FLOW METER NO. 1
6	FE 66.0904	EMERGENCY SHOWER/EYEWASH
7	TNK 66.0801	SULFURIC ACID TANK NO. 1
8	LE 66.0801B	ULTRASONIC LEVEL TRANSMITTER
9	PMP 66.0801	SULFURIC ACID PUMP NO. 1
10	PMP 66.0802	SULFURIC ACID PUMP NO. 2
11	PMP 66.0803	SULFURIC ACID PUMP NO. 3
12	FE 66.0802	SULFURIC ACID FLOW METER NO. 1
13	FE 66.0801	SULFURIC ACID FLOW METER NO. 2
14	FE 66.0801	EMERGENCY SHOWER/EYEWASH
15	WE1 69.0101	ANTISCALANT TOTE SCALE NO. 1
16	WE2 69.0101	ANTISCALANT TOTE SCALE NO. 2
17	WIT 69.0101	TOTE SCALE INDICATOR
18	PMP 69.0101	SCALE INHIBITOR METERING PUMP NO. 1
19	PMP 69.0102	SCALE INHIBITOR METERING PUMP NO. 2
20	FE 69.0101	SCALE INHIBITOR FLOW METER
21	TNK 65.0201	SODIUM BISULFITE DAY TANK
22	WE 65.0201	DAY TANK SCALE
23	WIT 65.0201	DAY TANK SCALE INDICATOR
24	PMP 65.0201	SODIUM BISULFITE METERING PUMP NO. 1
25	PMP 65.0202	SODIUM BISULFITE METERING PUMP NO. 2
26	FE 65.0201	SODIUM BISULFITE FLOW METER
27	FE 65.0201	EMERGENCY SHOWER/EYEWASH
28	FE 66.0901	EMERGENCY SHOWER/EYEWASH
29	TNK-66.0802	SULFURIC ACID DAY TANK
30	PMP 66.0806	SULFURIC ACID DAY TANK TRANSFER PUMP
31	PMP 66.0804	SULFURIC ACID METERING PUMP
32	PMP 66.0805	SULFURIC ACID METERING PUMP
33	FE 66.0804	SULFURIC ACID FLOW METER
34	VAL 66.0901A	2" BV 320
35	VAL 66.0801B	2" CV 670
36	VAL 66.0801A	2" BV 305
37	LI 66.0901	LEVEL INDICATOR
38	LI 66.0801	LEVEL INDICATOR
39	LI 66.0806B	LEVEL INDICATOR
40	FDR-61.1110	DRY POLYMER FEED PACKAGE, POLYMER ACTIVATION SYSTEM
41	PMP-61.1101	POLYMER METERING PUMP NO. 1
42	PMP-61.1102	POLYMER METERING PUMP NO. 2
43	FE-66.0901	POLYMER FLOW METER

(1)

REV	DATE	BY	DESCRIPTION
1	11-04-20	KF	REVISED PER ADDENDUM NO. 3

DESIGNED KF
DRAWN DPF
CHECKED BY
DATE SEPTEMBER 2020

Digitally signed by Scott C. Weddle
Contact Info: Carollo Engineers, Inc.
Date: 2020.11.04 17:18:30-08'00'

REGISTERED PROFESSIONAL ENGINEER SCOTT CLARK WEDDLE No. 49851 CIVIL STATE OF CALIFORNIA

carollo®

ANTIOCH CALIFORNIA OPPORTUNITY LIVES·HERE

CITY OF ANTIOCH
ANTIOCH BRACKISH WATER DESALINATION PROJECT
MECHANICAL
CHEMICAL STORAGE PLAN

VERIFY SCALES
BAR IS ONE INCH ON ORIGINAL DRAWING
0 1"
IF NOT ONE INCH ON THIS SHEET, ADJUST SCALES ACCORDINGLY

JOB NO. 10024A.10
DRAWING NO. 25M18
SHEET NO. 195 OF 498

PROJECT NO. 10024A10 FILE NAME: 10024A1025M18.dgn

LAST SAVED BY: DFassbinder Model: Layout1 ColorTable: gshade.ctb DesignScript: Carollo_Std_Pen_v0905.pen PlotScale: 1:1 User: svcPW Plot Date: 04-NOV-2020 3:21:32 PM

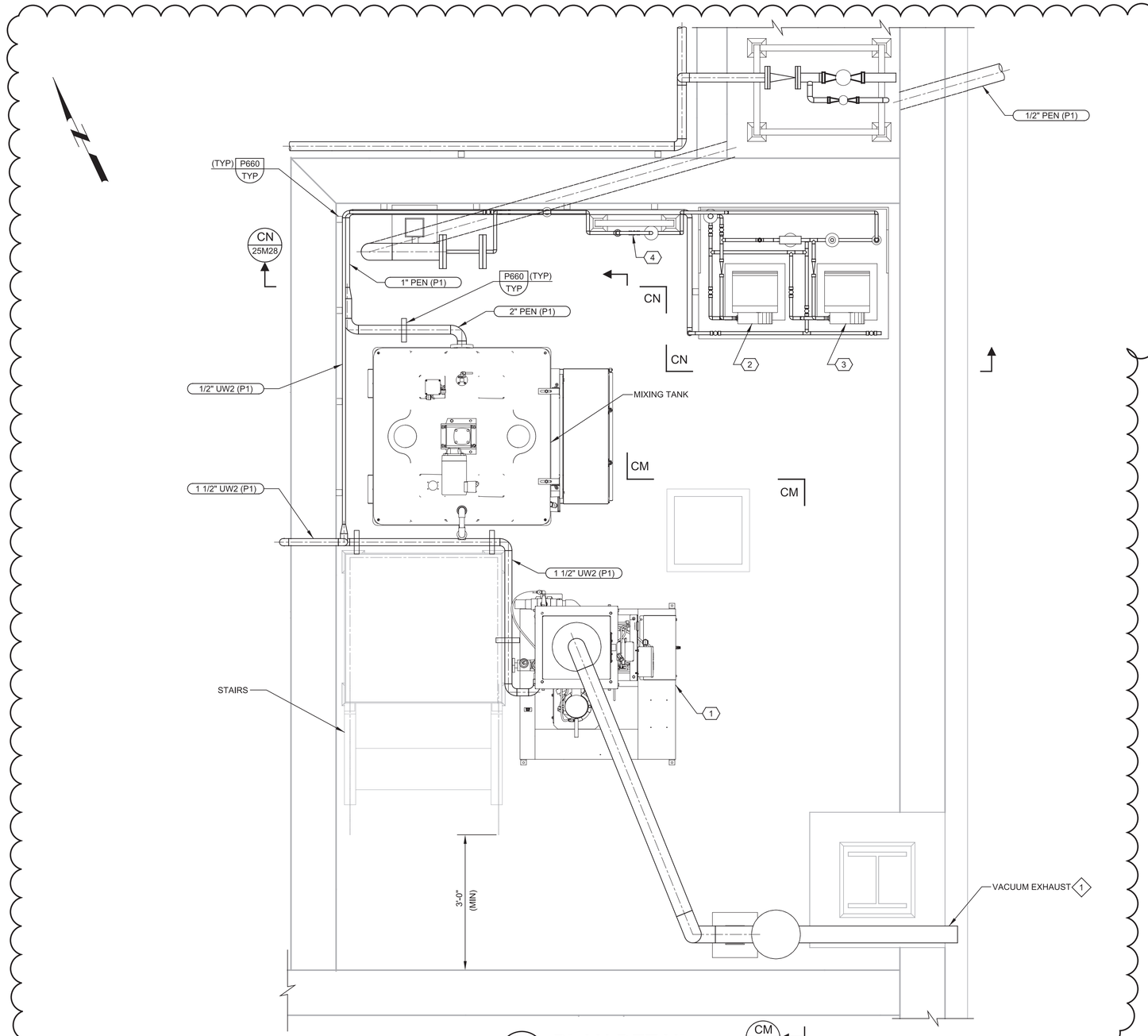

CL 25M18 PLAN DETAIL

SCALE: 3/4" = 1'-0"
FILE: 10024A1025M0107

GENERAL NOTES:

1. CONNECTIONS BETWEEN THE POLYMER ACTIVATION SYSTEM AND THE MIXING TANK NOT SHOWN FOR CLARITY.

KEY NOTES:

1. SUPPORT THE VACUUM EXHAUST PIPE OFF OF THE VERTICAL R UNNING H-BEAM NEARBY. USE UNISTRUT TO PROVIDE A MEANS OF SUPPORTING THE PIPE. REVIEW PLACEMENT AND SUPPORT LOCATION WITH ENGINEER PRIOR TO PERFORMING WORK. SUPPORTS AND EXHAUST PIPE CANNOT INTERFERE WITH STRUCTURAL GIRTS SUPPORTING THE SUNSHADE PANELING.

KEY TAGS:

1	FDR-61.1110	DRY POLYMER FEED PACKAGE, POLYMER ACTIVATION SYSTEM
2	PMP-61.1101	POLYMER METERING PUMP NO. 1
3	PMP-61.1102	POLYMER METERING PUMP NO. 2
4	FE-66.0901	POLYMER FLOW METER

REV	DATE	BY	DESCRIPTION
1	11-04-20	KF	REVISED PER ADDENDUM NO. 3

DESIGNED KF
DRAWN DPF
CHECKED BY
DATE SEPTEMBER 2020

Digitally signed by Scott C. Weddle
Contact Info: Carollo Engineers, Inc.
Date: 2020.11.04 16:58:06-08'00'

REGISTERED PROFESSIONAL ENGINEER SCOTT CLARK WEDDLE No. 49851 CIVIL STATE OF CALIFORNIA

carollo

ANTIOCH CALIFORNIA OPPORTUNITY LIVES·HERE

CITY OF ANTIOCH
ANTIOCH BRACKISH WATER DESALINATION PROJECT
MECHANICAL
1 POLYMER STORAGE AREA PLAN

VERIFY SCALES
BAR IS ONE INCH ON ORIGINAL DRAWING
0 1"
IF NOT ONE INCH ON THIS SHEET, ADJUST SCALES ACCORDINGLY

JOB NO. 10024A.10
DRAWING NO. 25M27
SHEET NO. 204 OF 498

PROJECT NO. 10024A10 FILE NAME: 10024A1025M27.dgn

Plot Date: 04-NOV-2020 5:28:41 PM
User: svcPW
PlotScale: 1:1
DesignScript: Carollo_Std_Pen_v0905.pen
ColorTable: gshade.ctb
Model: Layout1
LAST SAVED BY: DFassbinder

GENERAL NOTES:

1. CONNECTIONS BETWEEN THE POLYMER ACTIVATION SYSTEM AND THE MIXING TANK NOT SHOWN FOR CLARITY.

KEY NOTES:

1. EITHER SUPPORT THE VACUUM POWER UNIT AND COLLECTION BUCKET USING THE P615/TYP PIPE SUPPORT, OR MOUNT THE UNIT TO THE VERTICAL RUNNING H-BEAM NEARBY THAT IS SUPPORTING THE SHADE CANOPY. IF MOUNTING TO THE H-BEAM, USE UNISTRUT TO PROIDE A MEANS FOR ATTACHING THE UNIT. REVIEW PLACEMENT AND SUPPORT LOCATION WITH ENGINEER PRIOR TO PERFORMING WORK. COLLECTION BUCKET MUST HAVE 24-INCH CLEARANCE BENEATH IT. PLACEMENT CANNOT INTERFERE WITH STRUCTURAL GIRTS SUPPORTING THE SUNSHADE PANELING.
2. ROUTE VACUUM EXHAUST TO EXTERIOR OF CHEMICAL STORAGE AREA. ROUTING OF EXHAUST CANNOT INTERFERE WITH STRUCTURAL GIRTS SUPPORTING THE SUNSHADE PANELING.
3. PROVIDE ADDITIONAL PIPE SUPPORTS AS NEEDED TO ADEQUATELY SUPPORT THE 1/2" UW2 PIPE, USING TYPICAL DETAILS P660 AND P662.
4. FIELD ROUTE THE UW2 PIPE TO THE UW2 PIPE ON THE OPPOSITE SIDE OF THE WALL. PROVIDE ADDITIONAL PIPE SUPPORTS AS NEEDED TO ADEQUATELY SUPPORT THE UW2 PIPE OFF OF THE CONCRETE WALL USING TYPICAL DETAILS P660 AND P662.
5. COVER CALIBRATION COLUMN VENT WITH 316L SST #24 MESH.
6. SUPPORT 1 1/2-INCH UW2 PIPE OFF THE GROUND USING PIPE SUPPORTS SIMILAR TO P660. PIPE SUPPORT NOT SHOWN IN THIS VIEW FOR CLARITY.
7. FIXED HANDRAIL ALONG TWO SIDES OF PLATFORM ON TOP OF STAIRS. REMOVABLE CHAIN BARRIER ALONG PLATFORM SIDE CLOSEST TO POLYMER ACTIVATION SYSTEM.

KEY TAGS:

1	FDR-61.1110	DRY POLYMER FEED PACKAGE, POLYMER ACTIVATION SYSTEM
2	PMP-61.1101	POLYMER METERING PUMP NO. 1
3	PMP-61.1102	POLYMER METERING PUMP NO. 2
4	FE-66.0901	POLYMER FLOW METER

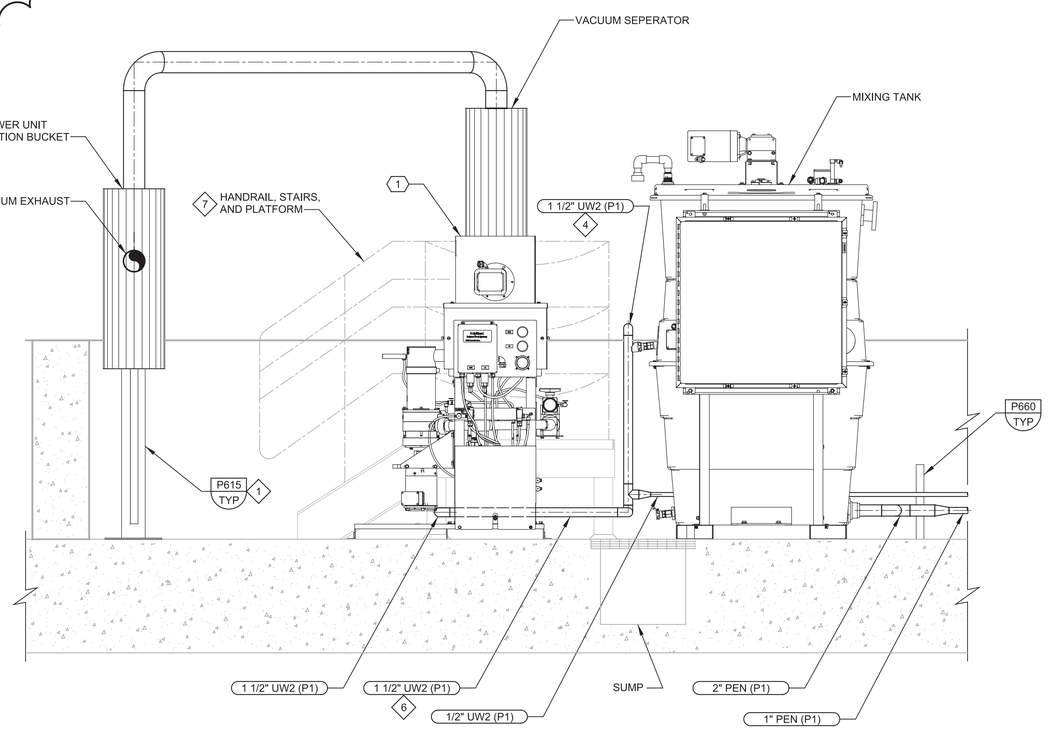

CM 25M27 SECTION

SCALE: 3/4" = 1'-0"
FILE: 10024A1025M0348

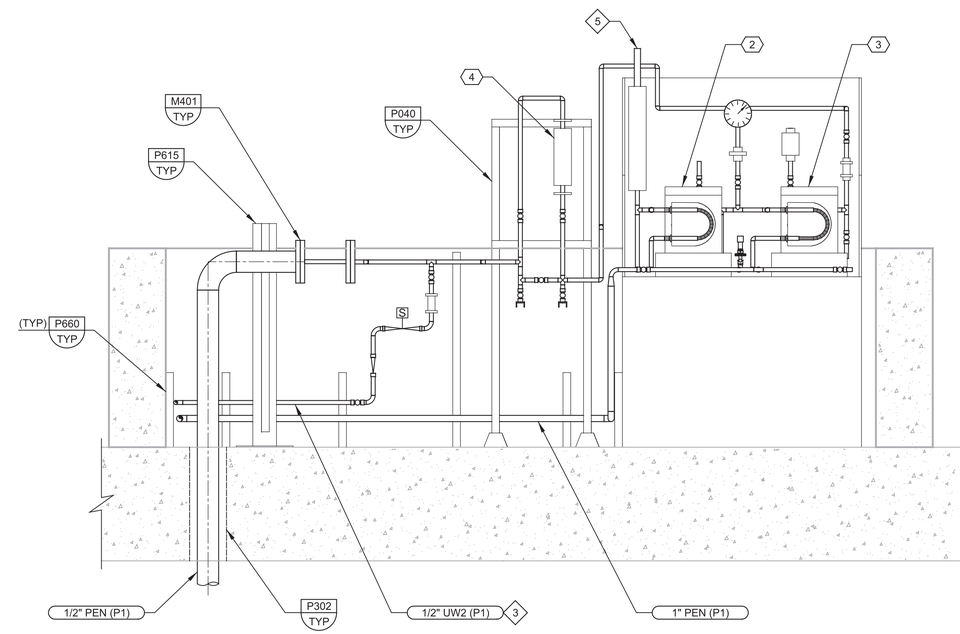

CN 25M27 SECTION

SCALE: 3/4" = 1'-0"
FILE: 10024A1025M0349

REV	DATE	BY	DESCRIPTION
1	11-04-20	KF	REVISED PER ADDENDUM NO. 3

DESIGNED KF
DRAWN DPF
CHECKED BY
DATE SEPTEMBER 2020

Digitally signed by Scott C. Weddle
Contact Info: Carollo Engineers, Inc.
Date: 2020.11.04 16:58:49-08'00'

REGISTERED PROFESSIONAL ENGINEER SCOTT CLARK WEDDLE No. 49851 CIVIL STATE OF CALIFORNIA

carollo®

ANTIOCH CALIFORNIA OPPORTUNITY LIVES·HERE

CITY OF ANTIOCH
ANTIOCH BRACKISH WATER DESALINATION PROJECT
MECHANICAL
POLYMER STORAGE AREA SECTIONS

VERIFY SCALES
BAR IS ONE INCH ON ORIGINAL DRAWING
0 1"
IF NOT ONE INCH ON THIS SHEET, ADJUST SCALES ACCORDINGLY

JOB NO. 10024A.10
DRAWING NO. 25M28
SHEET NO. 204 OF 498

PROJECT NO. 10024A10 FILE NAME: 10024A1025M28.dgn

Plot Date: 04-NOV-2020 3:00:11 PM
User: svcPW
PlotScale: 1:1
DesignScript: Carollo_Std_Pen_v0905.pen
ColorTable: gshade.ctb
Model: Layout1
LAST SAVED BY: DFassbinder

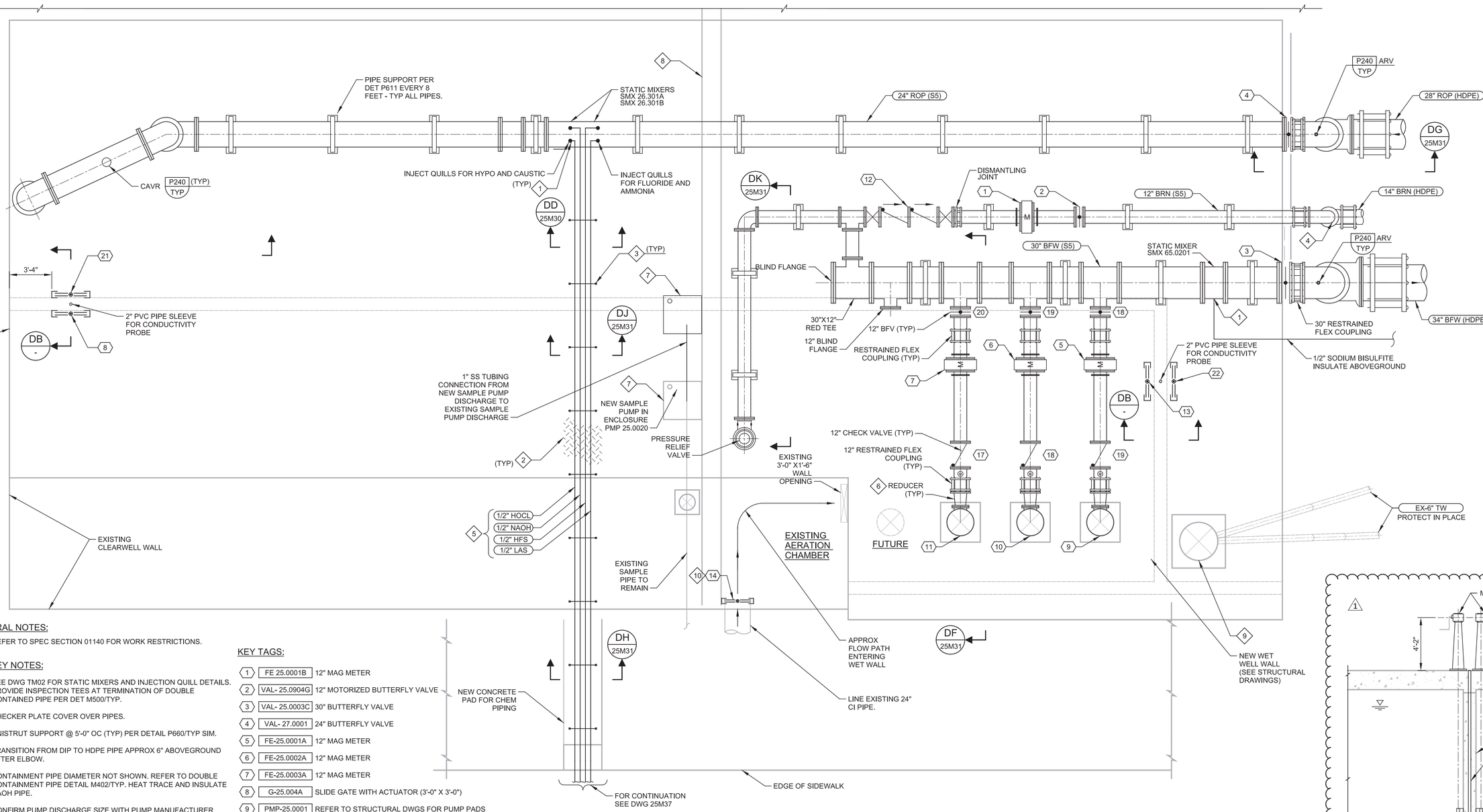

DA BRACKISH FILTER WATER PUMP STATION TOP PLAN

SCALE: 1/4"=1'-0"
FILE: 10024A1025M105

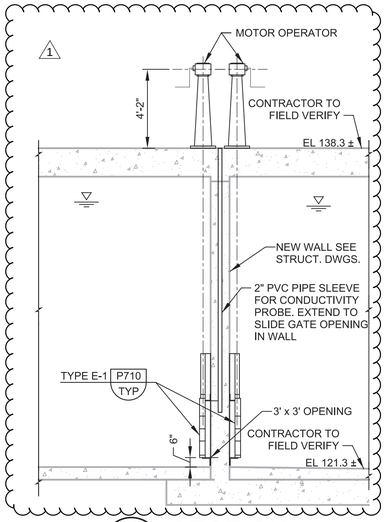

DB - SECTION

SCALE: 1/4" = 1'-0"
FILE: 10024A1025M303

GENERAL NOTES:

1. REFER TO SPEC SECTION 01140 FOR WORK RESTRICTIONS.

KEY NOTES:

1. SEE DWG TM02 FOR STATIC MIXERS AND INJECTION QUILL DETAILS. PROVIDE INSPECTION TEES AT TERMINATION OF DOUBLE CONTAINED PIPE PER DET M500/TYP.
2. CHECKER PLATE COVER OVER PIPES.
3. UNISTRUT SUPPORT @ 5'-0" OC (TYP) PER DETAIL P660/TYP SIM.
4. TRANSITION FROM DIP TO HDPE PIPE APPROX 6" ABOVEGROUND AFTER ELBOW.
5. CONTAINMENT PIPE DIAMETER NOT SHOWN. REFER TO DOUBLE CONTAINMENT PIPE DETAIL M402/TYP. HEAT TRACE AND INSULATE NAOH PIPE.
6. CONFIRM PUMP DISCHARGE SIZE WITH PUMP MANUFACTURER.
7. DEMOLISH EXISTING SAMPLE PUMP AND CANOPY. INSTALL NEW SAMPLE PUMPS 25.002 AND 25.002A AT THE LOCATION SHOWN. CONNECT TO EXISTING PUMP DISCHARGE PIPE WITH NEW 1" 316SS SAMPLE PIPE. MOUNT EACH PUMP ON CONCRETE PADS PER DET S302 (SIM). (1)
8. EXISTING DUCTBANK ON TOP OF CLEARWELL TO REMAIN. SUPPORT DURING CONSTRUCTION OF NEW SLAB.
9. REMOVE AND SAFELY STORE EXISTING PUMP DURING DEMOLITION OF EXISTING SLAB. RE-INSTALL AFTER NEW SLAB IS CONSTRUCTED. RECONNECT EXISTING POWER AND PIPING.
10. REMOVE EXISTING SLIDE GATE, STEM, AND SUPPORTS. INSTALL NEW SLIDE GATE OVER EXISTING OPENING.

KEY TAGS:

1	FE 25.0001B	12" MAG METER
2	VAL- 25.0904G	12" MOTORIZED BUTTERFLY VALVE
3	VAL- 25.0003C	30" BUTTERFLY VALVE
4	VAL- 27.0001	24" BUTTERFLY VALVE
5	FE-25.0001A	12" MAG METER
6	FE-25.0002A	12" MAG METER
7	FE-25.0003A	12" MAG METER
8	G-25.004A	SLIDE GATE WITH ACTUATOR (3'-0" X 3'-0")
9	PMP-25.0001	REFER TO STRUCTURAL DWGS FOR PUMP PADS
10	PMP-25.0002	REFER TO STRUCTURAL DWGS FOR PUMP PADS
11	PMP-25.0003	REFER TO STRUCTURAL DWGS FOR PUMP PADS
12	BFP 25.0904	BACKFLOW PREVENTER
13	G-0004B	SLIDE GATE
14	G-25.0004C	SLIDE GATE
15	VAL 25.0001A	12" CHECK VALVE, CV620
16	VAL 25.0002A	12" CHECK VALVE, CV620
17	VAL 25.0003A	12" CHECK VALVE, CV620
18	VAL 25.0001B	12" BFV 521
19	VAL 25.0002B	12" BFV 521
20	VAL 25.0003B	12" BFV 521
21	G.250004E	SLIDE GATE WITH ACTUATOR (3'-0" X 3'-0")
22	G.250004F	SLIDE GATE

REV	DATE	BY	DESCRIPTION
1	11-04-20	SWE	REVISED PER ADDENDUM NO. 3

DESIGNED ME
DRAWN DA
CHECKED MZ
DATE SEPTEMBER 2020

Digitally signed by Scott C. Weddle
Contact Info: Carollo Engineers, Inc.
Date: 2020.11.04 16:58:23-08'00'

REGISTERED PROFESSIONAL ENGINEER SCOTT CLARK WEDDLE No. 49851 CIVIL STATE OF CALIFORNIA

carollo

ANTIOCH CALIFORNIA OPPORTUNITY LIVES•HERE

CITY OF ANTIOCH
ANTIOCH BRACKISH WATER DESALINATION PROJECT
MECHANICAL
BRACKISH FILTERED WATER PUMP STATION TOP PLAN AND SECTION

VERIFY SCALES
BAR IS ONE INCH ON ORIGINAL DRAWING
0 1"
IF NOT ONE INCH ON THIS SHEET, ADJUST SCALES ACCORDINGLY

JOB NO. 10024A.10
DRAWING NO. 25M29
SHEET NO. 206 OF 498

Plot Date: 02-NOV-2020 9:18:17 AM
User: svcPW
PlotScale: 1:1
DesignScript: Carollo_Std_Pen_v0905.pen
ColorTable: gshade.ctb
Model: Layout1
LAST SAVED BY: gleal

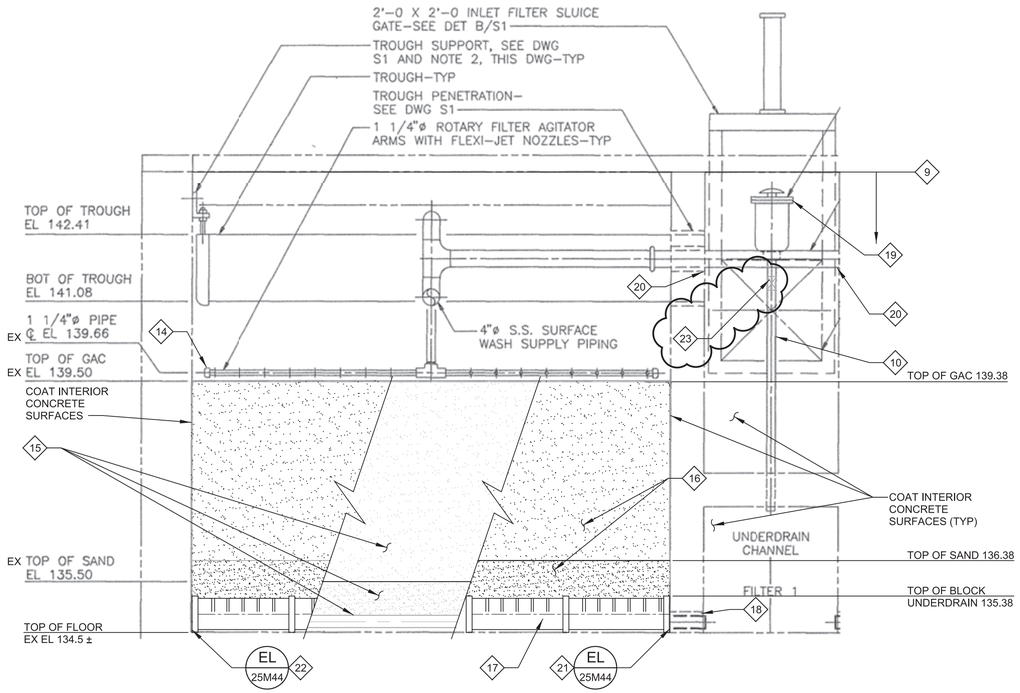

EF 25M39 LONGITUDINAL SECTION OF FILTERS

SCALE: NO SCALE
FILE: 10024A1025M40A

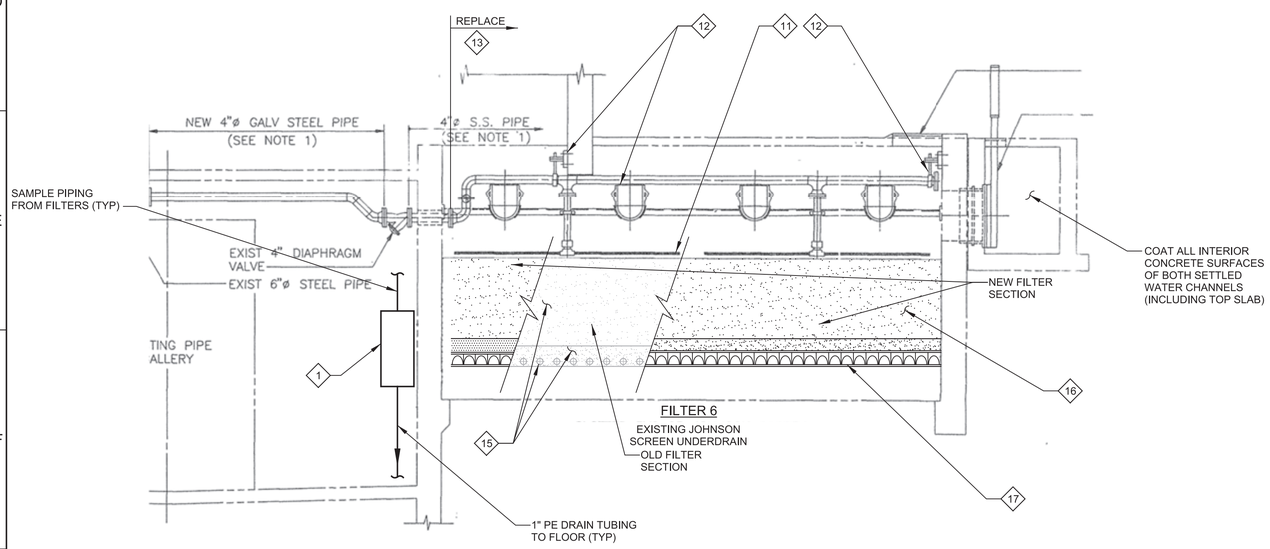

EG 25M39 CROSS SECTION OF FILTERS

SCALE: NO SCALE
FILE: 10024A1025M40A

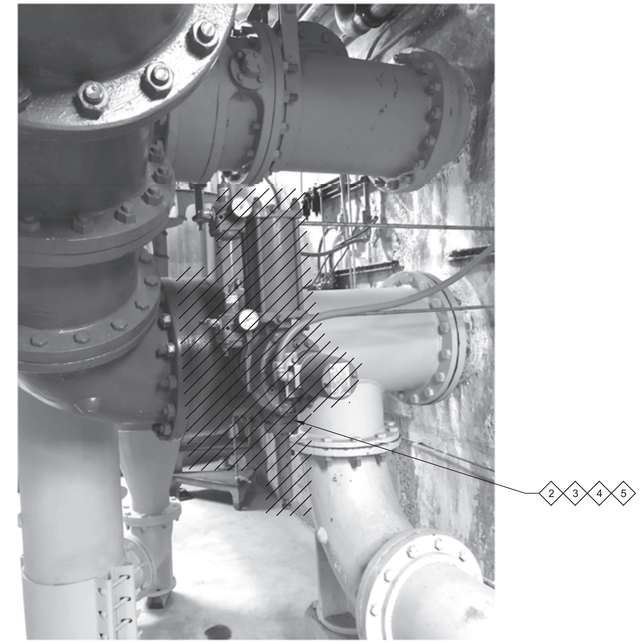

88 25M39 PHOTO

SCALE: NO SCALE
FILE: 10024A1025M40B

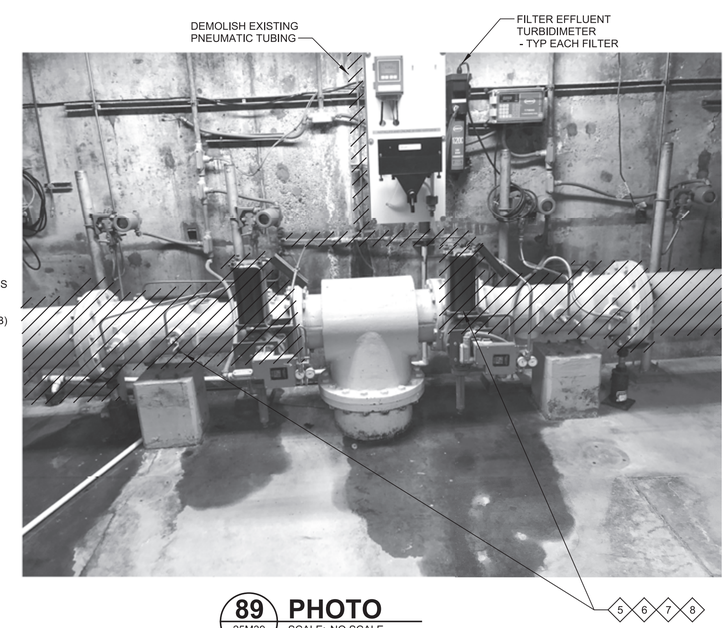

89 25M39 PHOTO

SCALE: NO SCALE
FILE: 10024A1025M40C

GENERAL NOTES:

1. REFER TO SPEC SECTION 09968 FOR COATING REQUIREMENTS.
2. REFER TO SPEC SECTION 13224 AND 13226 FOR FILTER UNDERDRAIN, SURFACE WASH PIPING, AIR VALVE PIPING, PIPING SUPPORTS AND FILTER MEDIA REPLACEMENT REQUIREMENTS.
3. REFER TO EXISTING REFERENCE DRAWINGS IN APPENDICES FOR DIMENSIONS OF EXISTING STRUCTURES.
4. NEW MANWAYS SHALL BE 316 SS APPROX DIMENSION 20.5"x24.5"X0.5" (FIELD CONFIRM). PROVIDE GASKETS AND 316 SS BOLTS TO SECURE HATCHES AND ENSURE WATER TIGHTNESS. FURTHER SEAL PERIMETER OF PLATE WITH NSF APPROVED MASTIC.

KEY NOTES:

1. SDI MONITOR FOR FILTERS 2, 4, 6, AND 8. MOUNT TO WALL USING 316 SS UNISTRUT. SIMILAR FOR SDI MONITOR FOR FILTERS 1, 3, 5 AND 7 MOUNTED ON OPPOSITE WALL OF GALLERY.
2. TYP FOR ALL 8 FILTERS.
3. DEMOLISH EXISTING BUTTERFLY VALVE AND PNEUMATIC ACTUATORS FOR BACKWASH (16"), FILTER-TO-WASTE (12"), AND DRAIN (12") PIPING FOR EACH FILTER.
4. INSTALL NEW BUTTERFLY VALVE AND MOTOR ACTUATOR FOR BACKWASH (16"), FILTER-TO-WASTE (12"), AND DRAIN (12") PIPING FOR EACH FILTER.
5. CONTRACTOR SHALL FIELD CONFIRM ALL DIMENSIONS.
6. TYP FOR ALL 8 FILTERS.
7. DEMOLISH EXISTING VENTURI FLOW METERS, PNEUMATIC ACTUATORS, AND CONNECTED PIPING APPROX 10 FEET LONG EACH, (2 PER FILTER). DEMOLISH EXISTING PNEUMATIC TUBING FROM EXISTING VALVES BACK TO THE NEAREST AIR SUPPLY PIPE HEADER (APPROX 20 FEET AWAY).
8. INSTALL NEW FLANGED SEGMENTS OF 10" 316 SS PIPE ,WITH NEW MAGNETIC FLOW METERS (1 PER FILTER) AND NEW MOTORIZED VALVES (1 PER FILTER). ENSURE MINIMUM OF 5 STRAIGHT PIPE DIAMETERS UPSTREAM AND 3 DOWNSTREAM OF FLOW METER. INSTALL FLANGE ISOLATION KITS AT EACH FLANGE WHERE PIPING MATERIAL CHANGES FROM TO 316 SS.
9. COAT INTERIOR CONCRETE SURFACES BELOW TOP OF FILTER WALLS (TYP OF 8 FILTERS) INCLUDING THE UNDERSIDE OF ANY SLABS OVER THE FILTERS, UPPER GULLET INTERIOR SURFACES (INCLUDING SLAB OVER THE GULLET), AND INTERIOR SURFACES OF THE LOWER GULLET (UNDERDRAIN CHANNEL). DO NOT TROWEL OR FINISH THE FILTER FLOOR TO A SMOOTH FINISH. DO NOT COAT OR APPLY ANY SEALERS TO THE FILTER FLOORS. COORDINATE PREPARATION OF THE FLOOR WITH THE UNDERDRAIN SUPPLIER.
10. REPLACE 2" AIR VALVE PIPING AND SUPPORTS FOR ALL AIR VALVES (ONE PER FILTER), TYP FOR ALL 8 FILTERS. USE 316 SS MATERIALS. SEE 1990 PHASE II RENOVATION DRAWINGS FOR SUPPORT DETAILS. (1)
11. REPLACE SURFACE WASH SWEEPS WITH 316 SS MATERIALS (TYP 8 FILTERS).
12. REPLACE SURFACE WASH PIPING AND SUPPORTS WITHIN EACH FILTER CELL WITH 316 SS PIPING (TYP 8 FILTERS). SEE SHEET 25M39 FOR ACTUAL SUPPORT INFORMATION.
13. START OF SURFACE WASH PIPING REPLACEMENT.
14. PROVIDE NEW 316 SS SURFACE SWEEPS AND ADJUST ELEVATION OF SURFACE SWEEPS RELATIVE TO TOP OF GAC AS SPECIFIED IN 13224 (TYP 8 FILTERS)
15. DEMO EXISTING GAC, SAND, GRAVEL, FILTER UNDERDRAIN, GROUT, ETC. TO EXPOSE ORIGINAL CONCRETE FLOOR. REFER TO EXISTING DRAWINGS FOR CURRENT CONDITIONS OF JOHNSON SCREEN UNDERDRAIN. PREPARE FLOOR FOR INSTALLATION OF NEW UNDERDRAIN PER MANUFACTURER'S INSTRUCTIONS. DISPOSE OF ALL MEDIA OFFSITE (TYPE 8 FILTERS).
16. ADD NEW GAC AND SAND FILTER MEDIA (TYP 8 FILTERS).
17. INSTALL NEW BLOCK UNDERDRAIN SYSTEM. SYSTEM WILL BE DESIGNED BY THE MANUFACTURER. SEE SPECIFICATION 13224 FOR LEVELING SYSTEM (TYP 8 FILTERS).
18. REMOVE PIPE AND JOINT COMPOUND AT EACH PENETRATION BETWEEN THE FILTER BOX AND THE UNDERDRAIN CHANNEL. CLEAN CONCRETE SURFACE TO BARE CONCRETE. PROVIDE SMOOTH GROUT FINISH AS RECOMMENDED BY THE UNDERDRAIN MANUFACTURER.
19. REPLACE 2" AIR/VAC VALVE PER SECTION 15119 (TYP ALL 8 FILTERS). (1)
20. REMOVE SURFACE WASH PIPING AND GROUT AT ALL WALL PENETRATIONS. AFTER REPLACING SURFACE WASH PIPING, REGROUT ALL PENETRATIONS WITH NSF APPROVED GROUT.
21. INSTALL 316 SS SEAL ANGLE AND FLOW DISTRIBUTION SECTION PER MANUFACTURER. ENSURE PROPER SEAL BEFORE GROUTING UNDERDRAIN.
22. INSTALL END PLATE PER MANUFACTURER.
23. REPLACE EXISTING 2" GATE VALVE WITH 2" 316 SS BALL VALVE. (1)

REV	DATE	BY	DESCRIPTION
1	11-04-20	MMB	REVISED PER ADDENDUM NO. 3

DESIGNED SW
DRAWN GL
CHECKED MMB
DATE SEPTEMBER 2020

Digitally signed by Michael M. Bundy
Contact Info: Carollo Engineers, Inc.
Date: 2020.11.04 23:24:10-07'00'

REGISTERED PROFESSIONAL ENGINEER MICHAEL MONROE BUNDY No. 81496 CIVIL STATE OF CALIFORNIA

carollo

ANTIOCH CALIFORNIA OPPORTUNITY LIVES·HERE

CITY OF ANTIOCH
ANTIOCH BRACKISH WATER DESALINATION PROJECT
MECHANICAL
PLANT A FILTER MEDIA REPLACEMENT SECTIONS AND PHOTOS

VERIFY SCALES
BAR IS ONE INCH ON ORIGINAL DRAWING
0 1"
IF NOT ONE INCH ON THIS SHEET, ADJUST SCALES ACCORDINGLY

JOB NO. 10024A.10
DRAWING NO. 25M40
SHEET NO. 217 OF 498

Plot Date: 03-NOV-2020 11:19:30 AM
User: svcPW
PlotScale: 1:1
DesignScript: Carollo_Std_Pen_v0905.pen
ColorTable: gshade.ctb
Model: Layout1
LAST SAVED BY: gleal

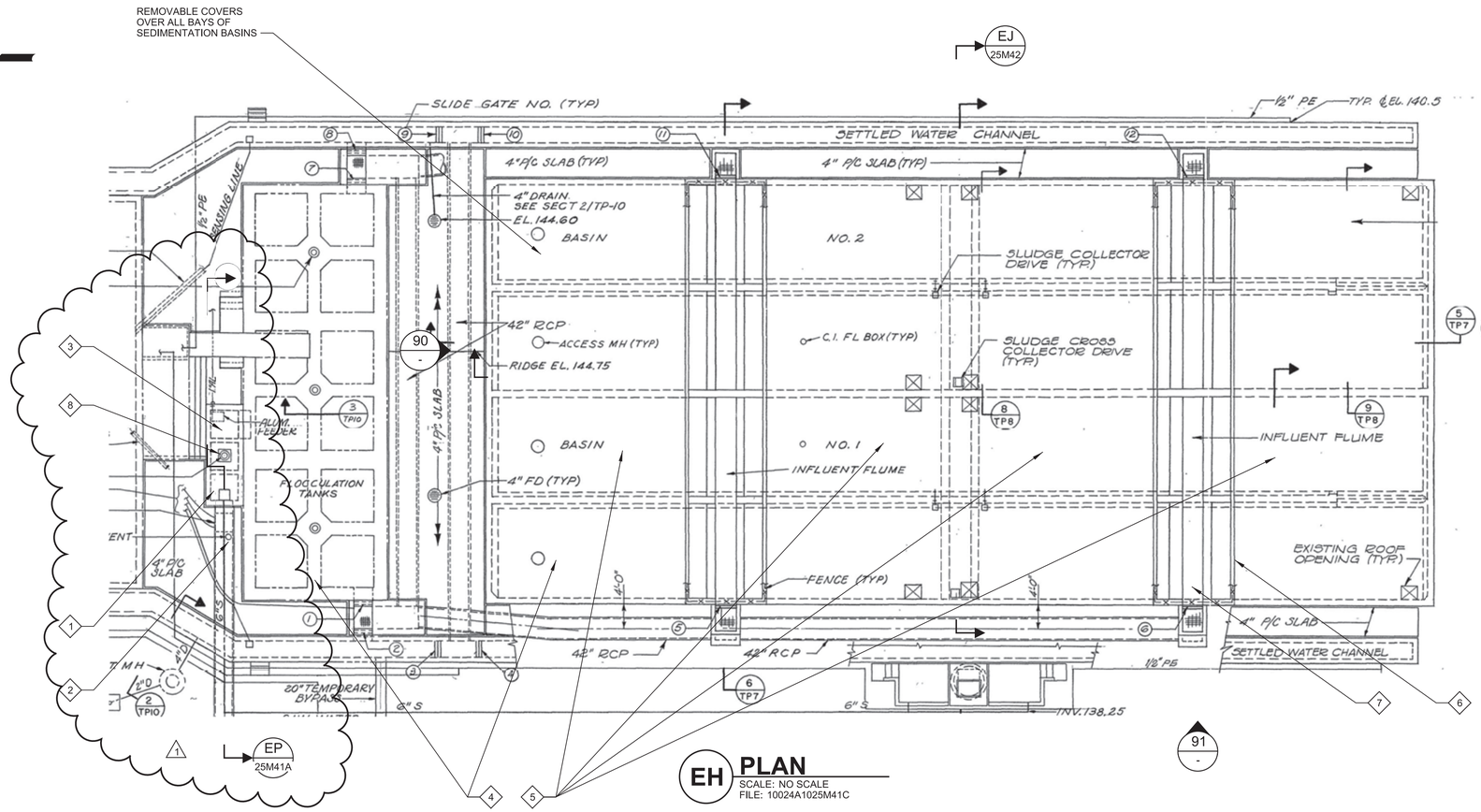

EH PLAN

SCALE: NO SCALE
FILE: 10024A1025M41C

GENERAL NOTES:

1. REFER TO SPEC SECTION 09668 FOR COATING REQUIREMENTS.
2. REFER TO SPECIFICATIONS BELOW FOR TUBE SETTLER REQUIREMENTS.
3. REFER TO REFERENCE DRAWINGS FOR DIMENSIONS OF EXISTING STRUCTURES.

KEY NOTES:

1. CONNECT TO EXISTING ALUM PIPE. ROUTE TO FLASH MIX VAULT NEAR CHEMICAL BUILDING. SEE DWG 25C03.
2. FILL EXISTING VAULT WITH CLSM AND 4" REINFORCED CONCRETE SIDEWALK ON TOP. MATCH EXISTING ELEVATIONS. ABANDON EXISTING FLOW METER IN PLACE AFTER NEW FLOW METER IS INSTALLED AND OPERATING.
3. INSTALL NEW PH MONITORING PROBE PER TYP/ NA012.
4. COAT ALL INTERIOR CONCRETE AND METAL SURFACES OF SEDIMENTATION AND FLOCCULATION BASINS.
5. REPLACE EXISTING SETTLING TUBES PER SPECIFICATIONS SECTION 11300.
6. INSTALL NEW SLUDGE DEFLECTOR PLATES FULL WIDTH OF EACH SED BASIN. SEE DWG 25M42.
7. STEEL INFLUENT FLUMES TO BE COATED BOTH BASINS . SEE PHOTOS DWG 25M42.
8. REPLACE EXISTING FLASH MIXER WITH NEW MIXER HAVING THE SAME ANCHOR BOLT PATTERN AS EXISTING MIXER. SEE SPECIFICATION 11221.

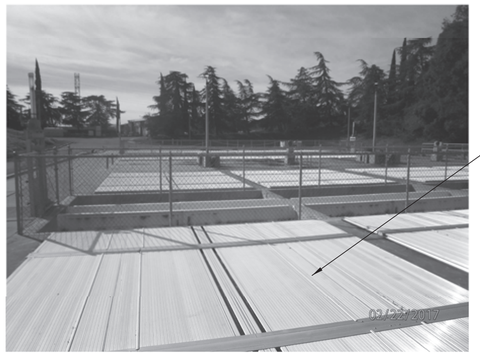

TUBE SETTLER MEDIA IS LOCATED BENEATH THE REMOVABLE COVERS IN BOTH SED BASINS.

90 PHOTO - EXISTING SEDIMENTATION BASIN COVERS LOOKING SOUTH

SCALE: NO SCALE
FILE: 10024A1025M41A

REMOVE AND REPLACE EXISTING STEEL BAFFLE PLATES IN BOTH SED BASINS. 16 PER BASIN.

91 PHOTO - EXISTING LAUNDER LOOKING EAST

SCALE: NO SCALE
FILE: 10024A1025M41B

REV	DATE	BY	DESCRIPTION
1	11-04-20	MMB	REVISED PER ADDENDUM NO. 3

DESIGNED SW
DRAWN GL
CHECKED MMB
DATE SEPTEMBER 2020

Digitally signed by Scott C. Weddle
Contact Info: Carollo Engineers, Inc.
Date: 2020.11.04 16:57:56-08'00'

REGISTERED PROFESSIONAL ENGINEER SCOTT CLARK WEDDLE No. 49851 CIVIL STATE OF CALIFORNIA

carollo

ANTIOCH CALIFORNIA OPPORTUNITY LIVES·HERE

CITY OF ANTIOCH
ANTIOCH BRACKISH WATER DESALINATION PROJECT
MECHANICAL
PLANT A SEDIMENTATION BASIN COATING PLAN AND PHOTOS

VERIFY SCALES
BAR IS ONE INCH ON ORIGINAL DRAWING
0 1"
IF NOT ONE INCH ON THIS SHEET, ADJUST SCALES ACCORDINGLY

JOB NO. 10024A.10
DRAWING NO. 25M41
SHEET NO. 218 OF 498

PROJECT NO. 10024A10 FILE NAME: 10024A1025M41.dgn

Plot Date: 02-NOV-2020 9:41:14 AM
User: svcPW
PlotScale: 1:1
DesignScript: Carollo_Std_Pen_v0905.pen
ColorTable: gshade.ctb
Model: Layout1
LAST SAVED BY: gleal

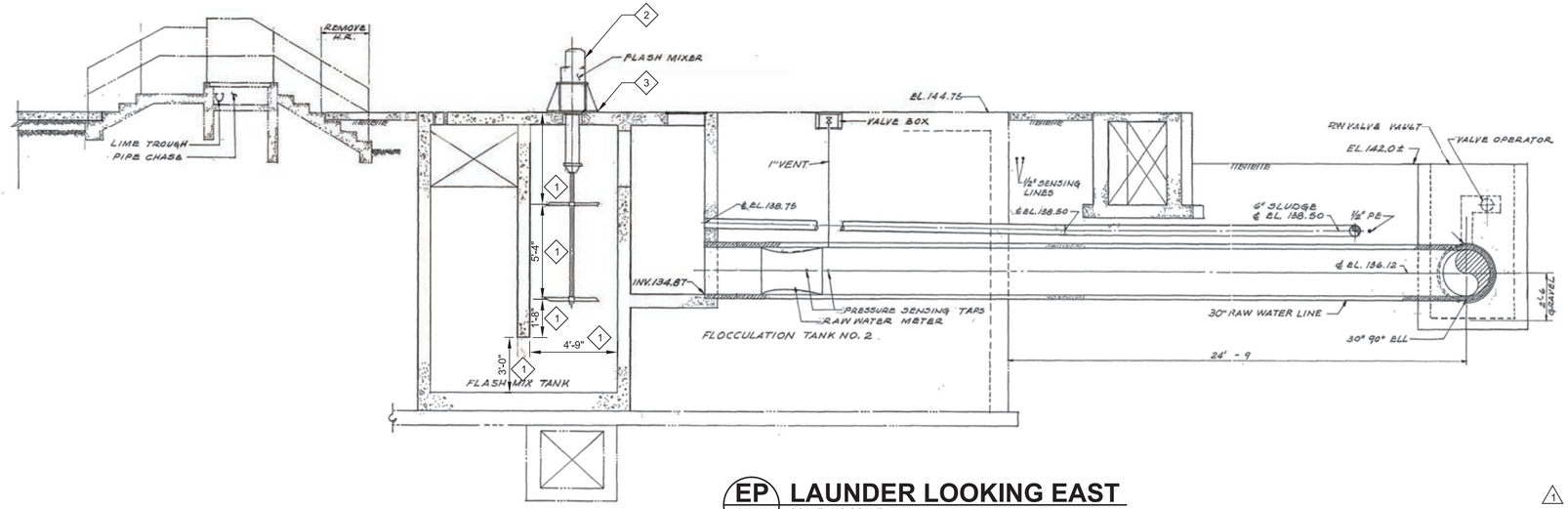

EP 25M41 LAUNDER LOOKING EAST

SCALE: NO SCALE
FILE: 10024A1025M41AA

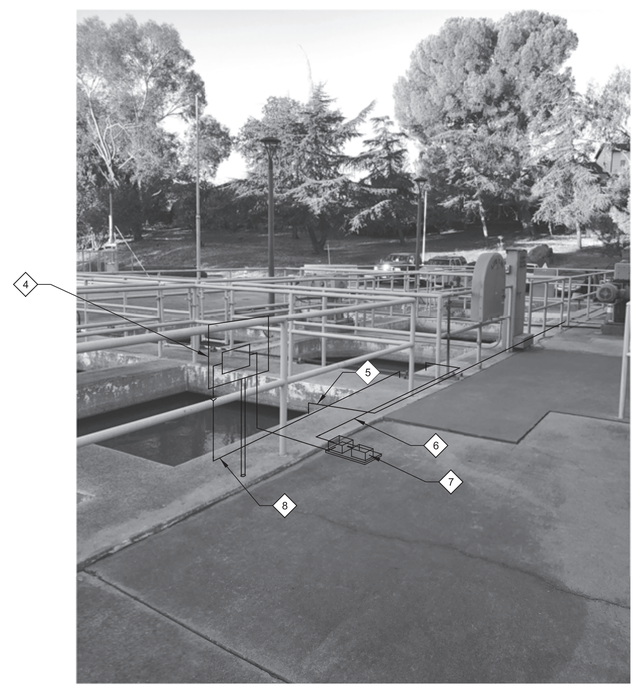

100 25C03 PHOTO - SAMPLE PUMP

SCALE: NO SCALE
FILE: 10024A1025M41AB

KEY NOTES:

1. CONTRACTOR TO CONFIRM ALL DIMENSIONS FOR THE MIXER SUPPLIER.
2. REPLACE EXISTING FLASH MIXER AND MOTOR, SEE SPECIFICATION 11221. MOUNT NEW MIXER TO EXISTING MOUNTING PLATE. INSTALL MIXER IN SAME ORIENTATION AS EXISTING TO MAINTAIN EXISTING WALKWAY.
3. PROVIDE NEW WATERTIGHT GASKET.
4. 2' X 2' MOUNTING PANEL FOR STREAMING CURRENT MONITOR AE 21.0604 PER DET EM211.
5. 1/2" POLYMER TUNE TO EAST FLOC BASIN. ROUTE ALONG TOP OF WALL WITH UNITSTRUT SUPPORTS. TERMINATE PIPE APPROX 3" ABOVE WATER SURFACE.
6. 1" SAMPLE PIPE FROM MIDDLE FLOC BASIN. EXTEND END OF SAMPLE PIPE IN APPROX 12" BELOW WATER SURFACE.
7. SAMPLE PUMP PMP 21.0602 MOUNTED ON PAD PER DETAIL S302 (TYP). MOUNT DISCONNECT SWITCH ON EQUIPMENT STAND.
8. 1" SS DRAIN PIPE. SLOPE PIPE AND TERMINATE AT MIDDLE FLOC BASIN APPROX 3" ABOVE WATER SURFACE.

1

REV	DATE	BY	DESCRIPTION
1	11-04-20	MMB	REVISED PER ADDENDUM NO. 3

DESIGNED SW
DRAWN GL
CHECKED MMB
DATE SEPTEMBER 2020

Digitally signed by Scott C. Weddle
Contact Info: Carollo Engineers, Inc.
Date: 2020.11.04 16:56:33-08'00'

REGISTERED PROFESSIONAL ENGINEER SCOTT CLARK WEDDLE No. 49851 CIVIL STATE OF CALIFORNIA

carollo®

ANTIOCH CALIFORNIA OPPORTUNITY LIVES·HERE

CITY OF ANTIOCH
ANTIOCH BRACKISH WATER DESALINATION PROJECT
MECHANICAL
1 PLANT A SEDIMENTATION BASIN COATING SECTION

VERIFY SCALES
BAR IS ONE INCH ON ORIGINAL DRAWING
0 1"
IF NOT ONE INCH ON THIS SHEET, ADJUST SCALES ACCORDINGLY

JOB NO. 10024A.10
DRAWING NO. 25M41A
SHEET NO. 218A OF 498

Model: Layout1 ColorTable: gshade.ctb DesignScript: Carollo_Std_Pen_v0905.pen PlotScale: 1:1 User: svcPW Plot Date: 02-NOV-2020 12:59:26 PM LAST SAVED BY: gleal

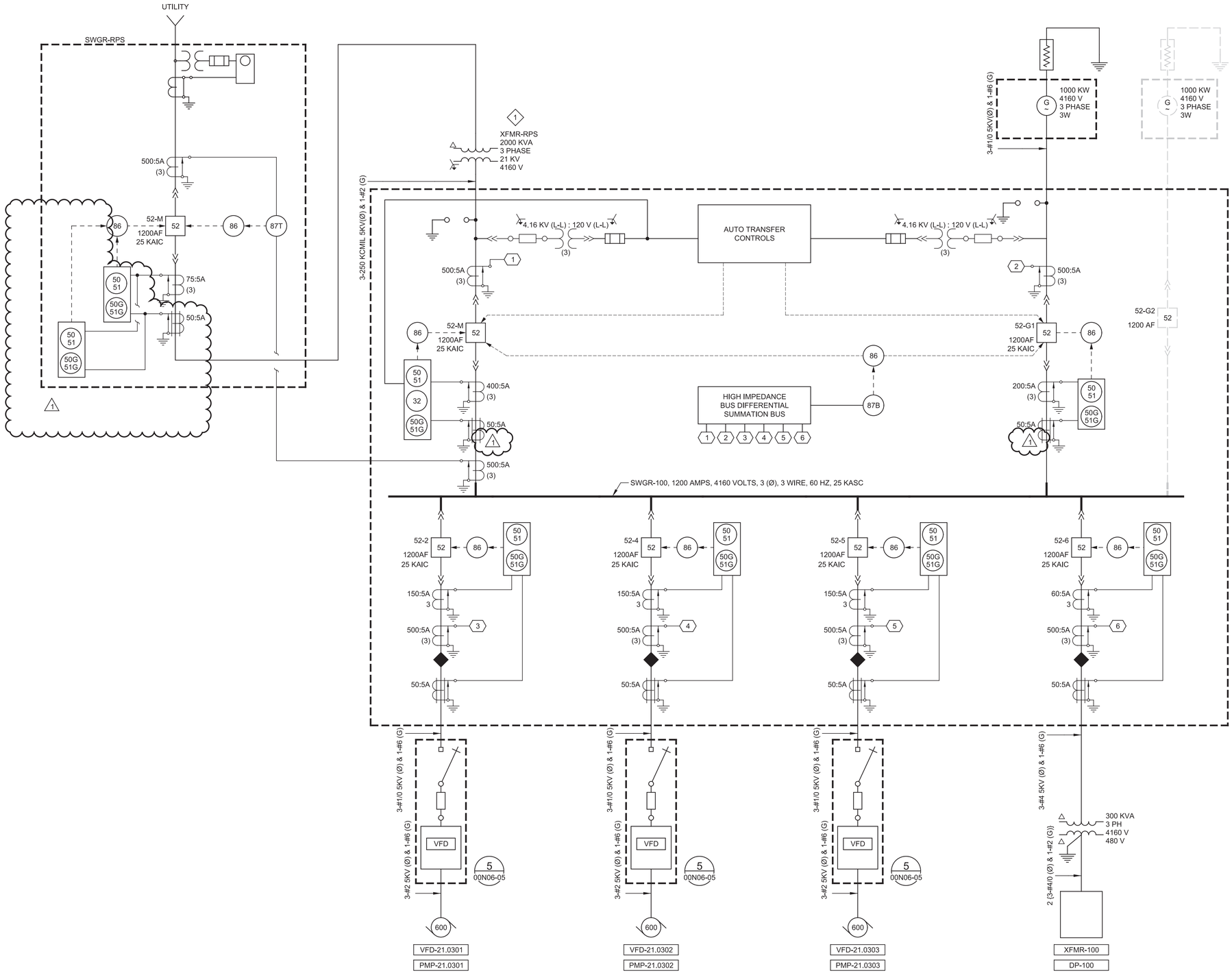

KEY NOTES:

1. NEW PAD-MOUNTED TRANSFORMERS WITH SERVICE ENTRANCE RATED SWITCHGEAR AND UTILITY METER ON THE PRIMARY OF THE TRANSFORMER. THE SWITCHGEAR SHALL BE PER PG&E REQUIREMENTS.

REV	DATE	BY	DESCRIPTION
1	11-04-20	AB	REVISED PER ADDENDUM NO.3

DESIGNED AB
DRAWN SGS
CHECKED JGB
DATE SEPTEMBER 2020

Digitally signed by Ashritha Banapuram
Contact Info: Carollo Engineers, Inc.
Date: 2020.11.05 09:52:44-0800

REGISTERED PROFESSIONAL ENGINEER ASHRITHA BANAPURAM No. 21815 ELECTRICAL STATE OF CALIFORNIA

carollo

ANTIOCH CALIFORNIA OPPORTUNITY LIVES·HERE

CITY OF ANTIOCH

ANTIOCH BRACKISH WATER DESALINATION PROJECT

ELECTRICAL

SWGR-100 ONE-LINE DIAGRAM

VERIFY SCALES
BAR IS ONE INCH ON ORIGINAL DRAWING
0 1"
IF NOT ONE INCH ON THIS SHEET, ADJUST SCALES ACCORDINGLY

JOB NO. 10024A.10
DRAWING NO. 00E03-02
SHEET NO. 239 OF 498

Plot Date: 04-NOV-2020 2:25:37 PM
User: svcPW
Model: Layout1 ColorTable: gshade.ctb DesignScript: Carollo_Std_Pen_v0905.pen PlotScale: 1:1
LAST SAVED BY: mpacheco

PROJECT NO. 10024A10 FILE NAME: 10024A1003E002.dgn

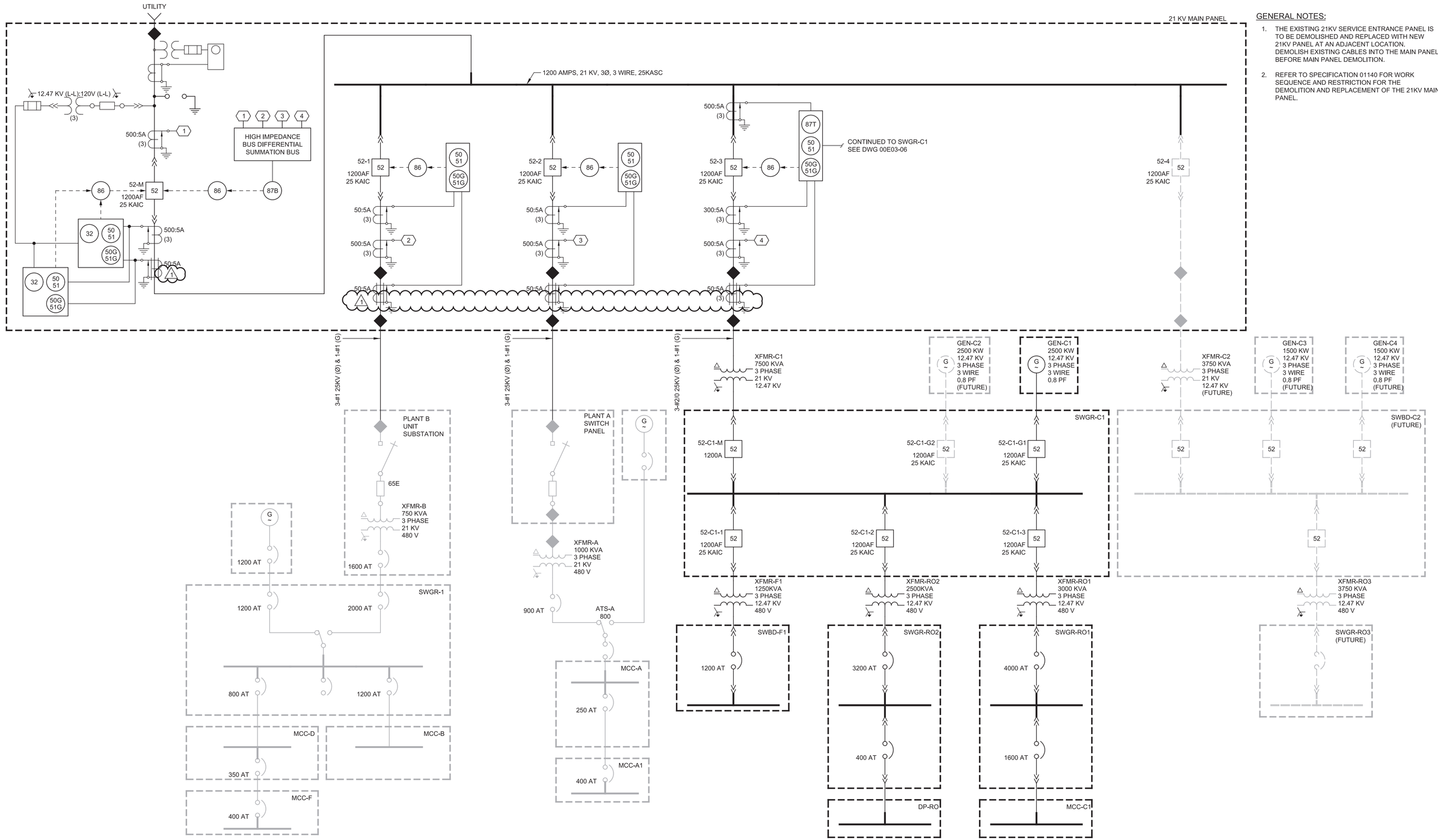

GENERAL NOTES:

1. THE EXISTING 21KV SERVICE ENTRANCE PANEL IS TO BE DEMOLISHED AND REPLACED WITH NEW 21KV PANEL AT AN ADJACENT LOCATION. DEMOLISH EXISTING CABLES INTO THE MAIN PANEL BEFORE MAIN PANEL DEMOLITION.
2. REFER TO SPECIFICATION 01140 FOR WORK SEQUENCE AND RESTRICTION FOR THE DEMOLITION AND REPLACEMENT OF THE 21KV MAIN PANEL.

REV	DATE	BY	DESCRIPTION
1	11-04-20	AB	REVISED PER ADDENDUM NO.3

DESIGNED AB
DRAWN SGS
CHECKED JGB
DATE SEPTEMBER 2020

Digitally signed by Ashritha Banapuram
Contact Info: Carollo Engineers, Inc.
Date: 2020.11.05 09:52:25-08'00'

REGISTERED PROFESSIONAL ENGINEER ASHRITHA BANAPURAM No. 21815 ELECTRICAL STATE OF CALIFORNIA

carollo

ANTIOCH CALIFORNIA OPPORTUNITY LIVES·HERE

CITY OF ANTIOCH
ANTIOCH BRACKISH WATER DESALINATION PROJECT
ELECTRICAL
MAIN PANEL ONE-LINE DIAGRAM

VERIFY SCALES
BAR IS ONE INCH ON ORIGINAL DRAWING
0 1"
IF NOT ONE INCH ON THIS SHEET, ADJUST SCALES ACCORDINGLY

JOB NO. 10024A.10
DRAWING NO. 00E03-04
SHEET NO. 241 OF 498

PROJECT NO. 10024A10 FILE NAME: 10024A1003E004.dgn

LAST SAVED BY: mpacheco
Model: Layout1 ColorTable: gshade.ctb DesignScript: Carollo_Std_Pen_v0905.pen PlotScale: 1:1
User: svcPW Plot Date: 04-NOV-2020 8:07:24 AM

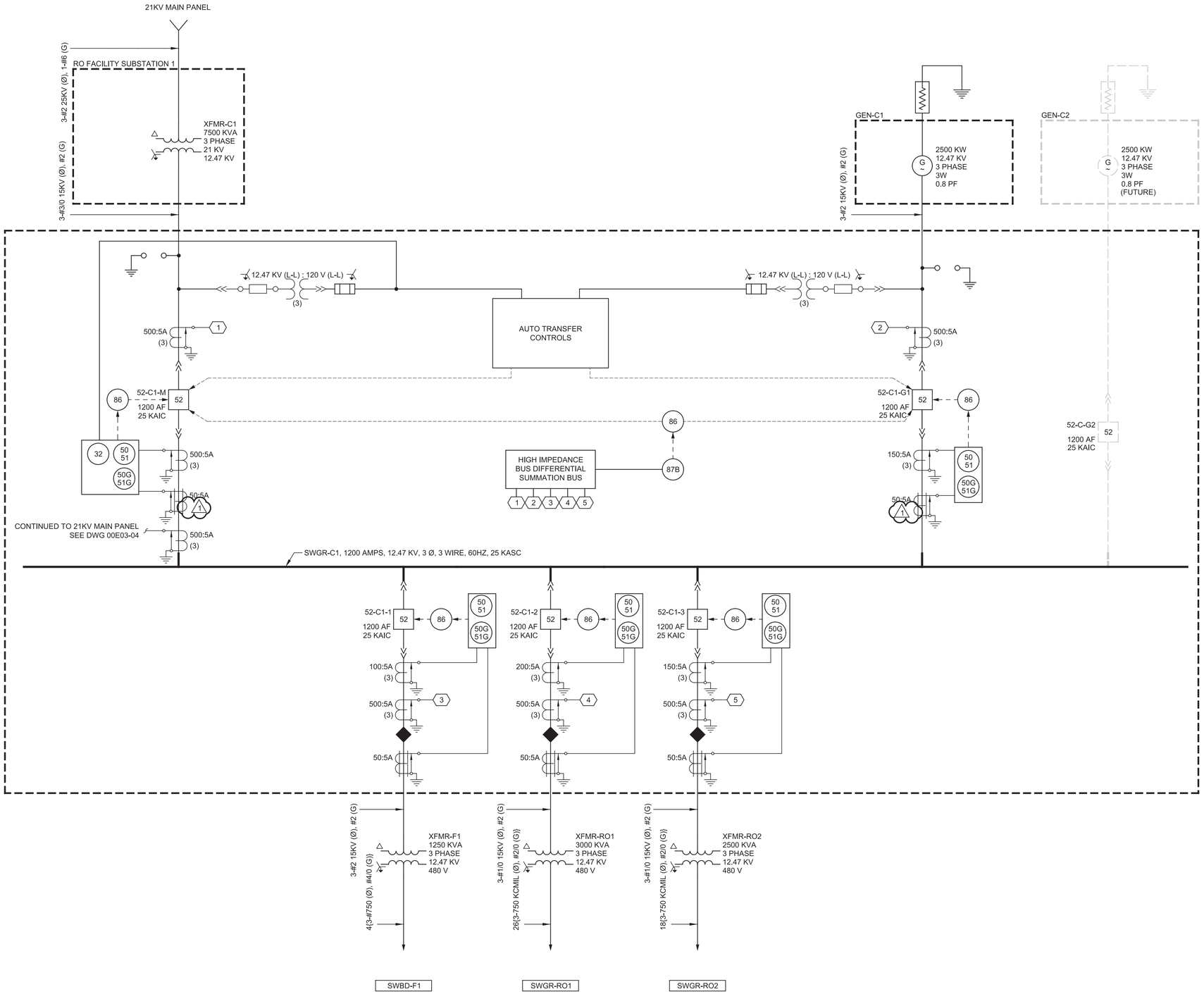

REV	DATE	BY	DESCRIPTION
1	11-04-20	AB	REVISED PER ADDENDUM NO.3

DESIGNED AB
DRAWN SGS
CHECKED JGB
DATE SEPTEMBER 2020

Digitally signed by Ashvitha Banaparam
Contact info: ashvitha@carollo.com, Inc.
Date: 2020.11.20 09:53:42 -08'00'

REGISTERED PROFESSIONAL ENGINEER ASHVITHA BANAPARAM No. 21815 ELECTRICAL STATE OF CALIFORNIA

carollo®

ANTIOCH CALIFORNIA OPPORTUNITY LIVES·HERE

CITY OF ANTIOCH

ANTIOCH BRACKISH WATER DESALINATION PROJECT

ELECTRICAL

SWGR-C1 ONE-LINE DIAGRAM

VERIFY SCALES
BAR IS ONE INCH ON ORIGINAL DRAWING
0 1"
IF NOT ONE INCH ON THIS SHEET, ADJUST SCALES ACCORDINGLY

JOB NO. 10024A.10
DRAWING NO. 00E03-06
SHEET NO. 243 OF 498

PROJECT NO. 10024A10 FILE NAME: 10024A1003E006.dgn

Plot Date: 04-NOV-2020 8:07:22 AM User: svcPW PlotScale: 1:1 DesignScript: Carollo_Std_Pen_v0905.pen ColorTable: gsharde.ctb Model: Layout1 LAST SAVED BY: mpacheco

LUMINAIRE SCHEDULE

9/9/2020

ITEM	DESCRIPTION	MOUNTING METHOD	LAMP QUANTITY	LAMP TYPE	LUMINAIRE SPECIFICATIONS MANUFACTURER	CATALOG	VOLTS	VA
K	BUILDING-MOUNTED LUMINAIRE WITH ALUMINUM HOUSING SEALED AGAINST MOISTURE AND ENVIRONMENTAL CONTAMINANTS 70 CRI, HIGH EFFICIENCY LEDs 0-10V DIMMING WITH PHOTOCELL DARK BRONZE WITH BATTERY PACK, AMBIENT TEMPERATURES -20 TO 60 DEG C	WALL MOUNT	N/A	LED 4000 CCT 6983 LUMENS	HOLOPHANE	W4GLED 20C1000 40K T3M MVOLT PE ELSW LVG BZSDP	120	79
L1	SEALED, AND GASKETED LED LUMINAIRE, CLEAR POLYCARBONATE LENS 80 CRI, SUITABLE FOR WET LOCATIONS, w/ HIGH EFFICIENCY LEDs FOR AMBIENT TEMPERATURES -29 TO 40 DEG C, L80 AT 75,000 HOURS 0-10V DIMMING INTEGRATED MOTION SENSOR	CEILING MOUNT OR SUSPENDED AS NEEDED	N/A	LED 4000K CCT 6,643 LUMENS SENSOR SWITCH	HOLOPHANE	EVT4 8000LM PCL WD MVOLT GZ10 40K 80 CRI MSI10C5VWL	120	83
L2	SEALED, AND GASKETED LED LUMINAIRE, CLEAR POLYCARBONATE LENS 80 CRI, SUITABLE FOR WET LOCATIONS, w/ HIGH EFFICIENCY LEDs FOR AMBIENT TEMPERATURES -29 TO 40 DEG C, L80 AT 75,000 HOURS 0-10V DIMMING INTEGRATED MOTION SENSOR / PHOTOCELL ACCESSORY	CEILING MOUNT OR SUSPENDED AS NEEDED	N/A	LED 4000K CCT 6,643 LUMENS SENSOR SWITCH	HOLOPHANE	EVT4 8000LM PCL WD MVOLT GZ10 40K 80 CRI MSI10C5VWL DSC5VWL	120	83
M1	SEALED, AND GASKETED LED LUMINAIRE, CLEAR POLYCARBONATE LENS 80 CRI, SUITABLE FOR WET LOCATIONS, w/ HIGH EFFICIENCY LEDs FOR AMBIENT TEMPERATURES 0 TO 30 DEG C, L80 AT 75,000 HOURS 0-10V DIMMING WITH BODINE EMERGENCY BATTERY PACK INTEGRATED MOTION SENSOR	CEILING MOUNT OR SUSPENDED AS NEEDED	N/A	LED 4000K CCT 6,643 LUMENS SENSOR SWITCH	HOLOPHANE	EVT4 8000LM PCL WD MVOLT GZ10 40K 80 CRI E15WCP MSI10C5VWL	120	83
M2	SEALED, AND GASKETED LED LUMINAIRE, CLEAR POLYCARBONATE LENS 80 CRI, SUITABLE FOR WET LOCATIONS, w/ HIGH EFFICIENCY LEDs FOR AMBIENT TEMPERATURES 0 TO 30 DEG C, L80 AT 75,000 HOURS 0-10V DIMMING WITH BODINE EMERGENCY BATTERY PACK INTEGRATED MOTION SENSOR / PHOTOCELL ACCESSORY	CEILING MOUNT OR SUSPENDED AS NEEDED	N/A	LED 4000K CCT 6,643 LUMENS SENSOR SWITCH	HOLOPHANE	EVT4 8000LM PCL WD MVOLT GZ10 40K 80 CRI E15WCP MSI10C5VWL DSC5VWL	120	83
N	MONGOOSE POLE LIGHT, FORWARD THROW, ROADWAY TYPE 4 DISTRIBUTION 0-10V DIMMING WITH PHOTOCELL RECEPTACLE ALUMINUM POLE ARM ROUND TAPERED ALUMINUM POLE 20'-0" (WHERE REQUIRED)	POLE MOUNT	N/A	LED 4000 K CCT 41000 LUMENS	HOLOPHANE	MGLED P2 40K MVOLT FT LT BZSD AO BR1060 GR RTA1440C PL ND GR	208	259

ELECTRICAL HANDHOLE AND MANHOLE SCHEDULE

11/3/2020

TAG NO	MINIMUM INTERIOR DIMENSIONS (INCHES) WIDTH	LENGTH	DEPTH	CONSTRUCTION	TYPICAL DETAIL	SURFACE LOADING	COMMENTS
MH-1	60	60	96	PRECAST	EM062	ROADWAY	COORDINATE DEPTH WITH EXISTING DUCTBANK
MH-2	72	60	180	PRECAST	EM062	ROADWAY	COORDINATE DEPTH WITH EXISTING DUCTBANK
MH-3	72	72	96	PRECAST	EM062	ROADWAY	
MH-4	72	60	144	PRECAST	EM062	ROADWAY	
MH-5	60	60	72	PRECAST	EM062	ROADWAY	
HH-6	36	36	48	PRECAST	EM056	ROADWAY	
HH-7	36	36	48	PRECAST	EM056	ROADWAY	
HH-8	36	36	48	PRECAST	EM056	ROADWAY	
HH-DD-P	36	36	48	PRECAST	EM056	ROADWAY	
HH-DD-S	36	36	48	PRECAST	EM056	ROADWAY	

1

NOTES:
1. SEE SPECIFICATION 02581 FOR PRECAST ELECTRICAL HANDHOLES AND MANHOLES.
2. ALTERNATES: PROVIDE PER TYPICAL DETAIL EM062 IF INDICATED UNDER "COMMENTS".

DISCONNECT SCHEDULE

TAG	VOLTAGE	POLES	AMPS	NEMA TYPE	TYPE
B	600 VAC	3P	30A	4X-SS	NON-FUSED
G	600 VAC	3P	200A	4X-NON-METALLIC	NON-FUSED
H	600 VAC	3P	200A	4X-SS	NON-FUSED
J	240 VAC	2P		4X-SS	NON-FUSED
Q	120 VAC	1P	30A	4X-NON-METALLIC	FUSED
R	120 VAC	1P		3R	MAN. STARTER w/o OL

ACCESSORIES
1= "B" TYPE ELECTRICAL INTERLOCK FOR POSITION INDICATION
2= INSULATED GROUNDABLE NEUTRAL KIT
3= DRAIN AND BREATHER KIT WHEN OUTDOORS
4= EARLY BREAK AUXILIARY CONTACT

REV	DATE	BY	DESCRIPTION
1	11-04-20	INTL	REVISED PER ADDENDUM NO.3

DESIGNED AB
DRAWN BPR
CHECKED JGB
DATE SEPTEMBER 2020

Digitally signed by Ashritha Banapuram
Contact Info: Carollo Engineers, Inc.
Date: 2020.11.05 09:53:06-08'00'

REGISTERED PROFESSIONAL ENGINEER ASHRITHA BANAPURAM No. 21815 ELECTRICAL STATE OF CALIFORNIA

carollo

ANTIOCH CALIFORNIA OPPORTUNITY LIVES·HERE

CITY OF ANTIOCH
ANTIOCH BRACKISH WATER DESALINATION PROJECT
ELECTRICAL
HANDHOLE, MANHOLE & LUMINAIRE SCHEDULE - 2

VERIFY SCALES
BAR IS ONE INCH ON ORIGINAL DRAWING
0 1"
IF NOT ONE INCH ON THIS SHEET, ADJUST SCALES ACCORDINGLY

JOB NO. 10024A.10
DRAWING NO. 00E04-04
SHEET NO. 256 OF 498

PROJECT NO. 10024A10 FILE NAME: 10024A1004E004.dgn

Plot Date: 04-NOV-2020 4:03:29 PM User: svcPW PlotScale: 1:1 DesignScript: Carollo_Std_Pen_v0905.pen ColorTable: gshade.ctb Model: Layout1 LAST SAVED BY: mpacheco

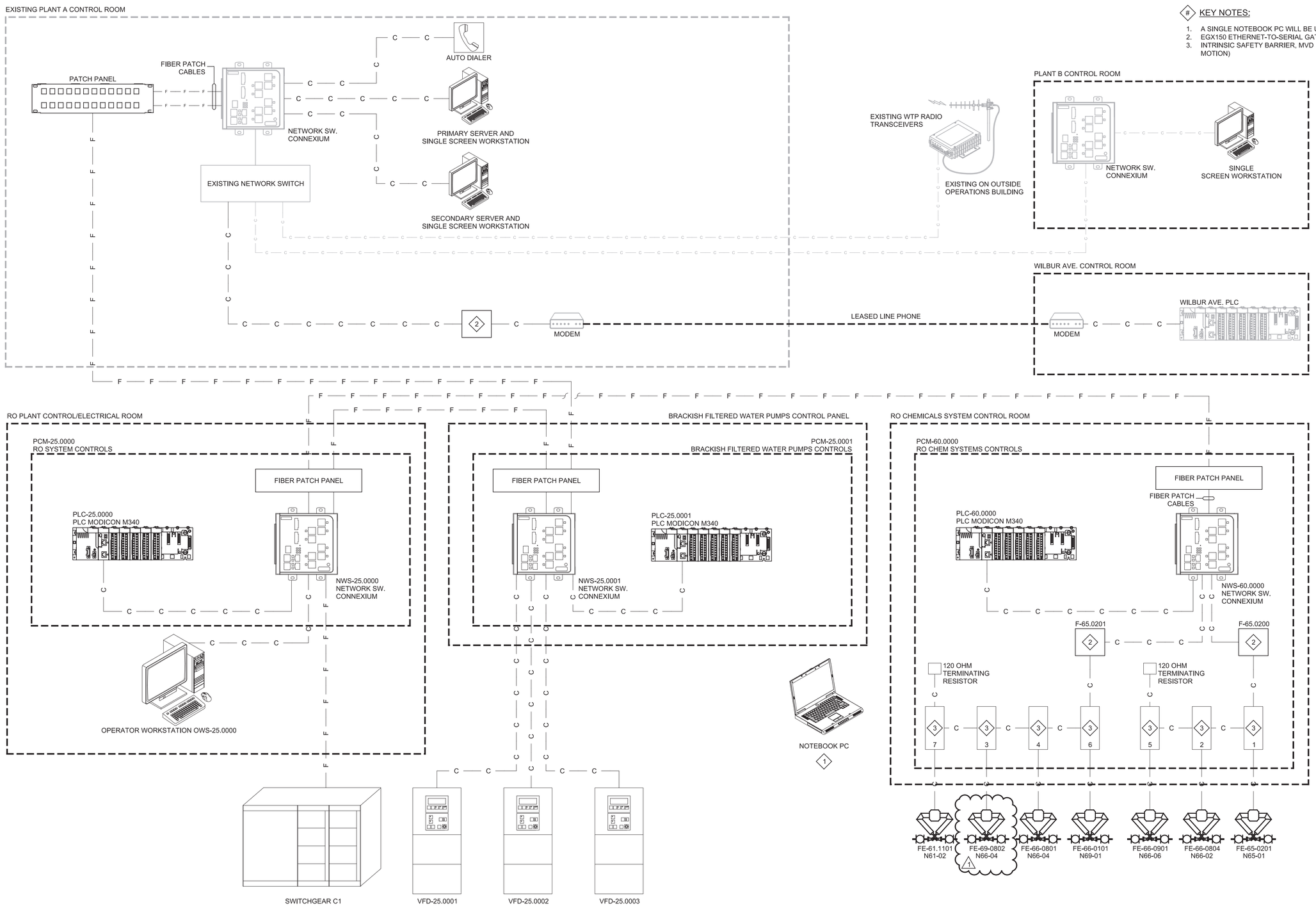

KEY NOTES:

1. A SINGLE NOTEBOOK PC WILL BE USED IN MULTIPLE LOCATIONS.
2. EGX150 ETHERNET-TO-SERIAL GATEWAY
3. INTRINSIC SAFETY BARRIER, MVD DIRECT CONNECT (MICRO MOTION)

REV	DATE	BY	DESCRIPTION
1	11-04-20	MMB	REVISED PER ADDENDUM NO. 3

DESIGNED AWK
DRAWN SGS
CHECKED KMP
DATE SEPTEMBER 2020

Digitally signed by Ashritha Banapuram
Contact Info: Carollo Engineers, Inc.
Date: 2020.11.05 11:18:16-08'00'

REGISTERED PROFESSIONAL ENGINEER ASHRITHA BANAPURAM No. 21815 ELECTRICAL STATE OF CALIFORNIA

carollo

ANTIOCH CALIFORNIA OPPORTUNITY LIVES·HERE

CITY OF ANTIOCH

ANTIOCH BRACKISH WATER DESALINATION PROJECT

INSTRUMENTATION

OVERVIEW
SCADA BLOCK DIAGRAM - 1

VERIFY SCALES
BAR IS ONE INCH ON ORIGINAL DRAWING
0 1"
IF NOT ONE INCH ON THIS SHEET, ADJUST SCALES ACCORDINGLY

JOB NO. 10024A.10
DRAWING NO. 00N03-01
SHEET NO. 346 OF 498

PROJECT NO. 10024A10 FILE NAME: 10024A1000N0301.dgn

LAST SAVED BY: sshepard
Model: Layout1 ColorTable: gshade.ctb DesignScript: Carollo_Std_Pen_v0905.pen PlotScale: 1:1
User: svcPW Plot Date: 03-NOV-2020 9:33:53 AM

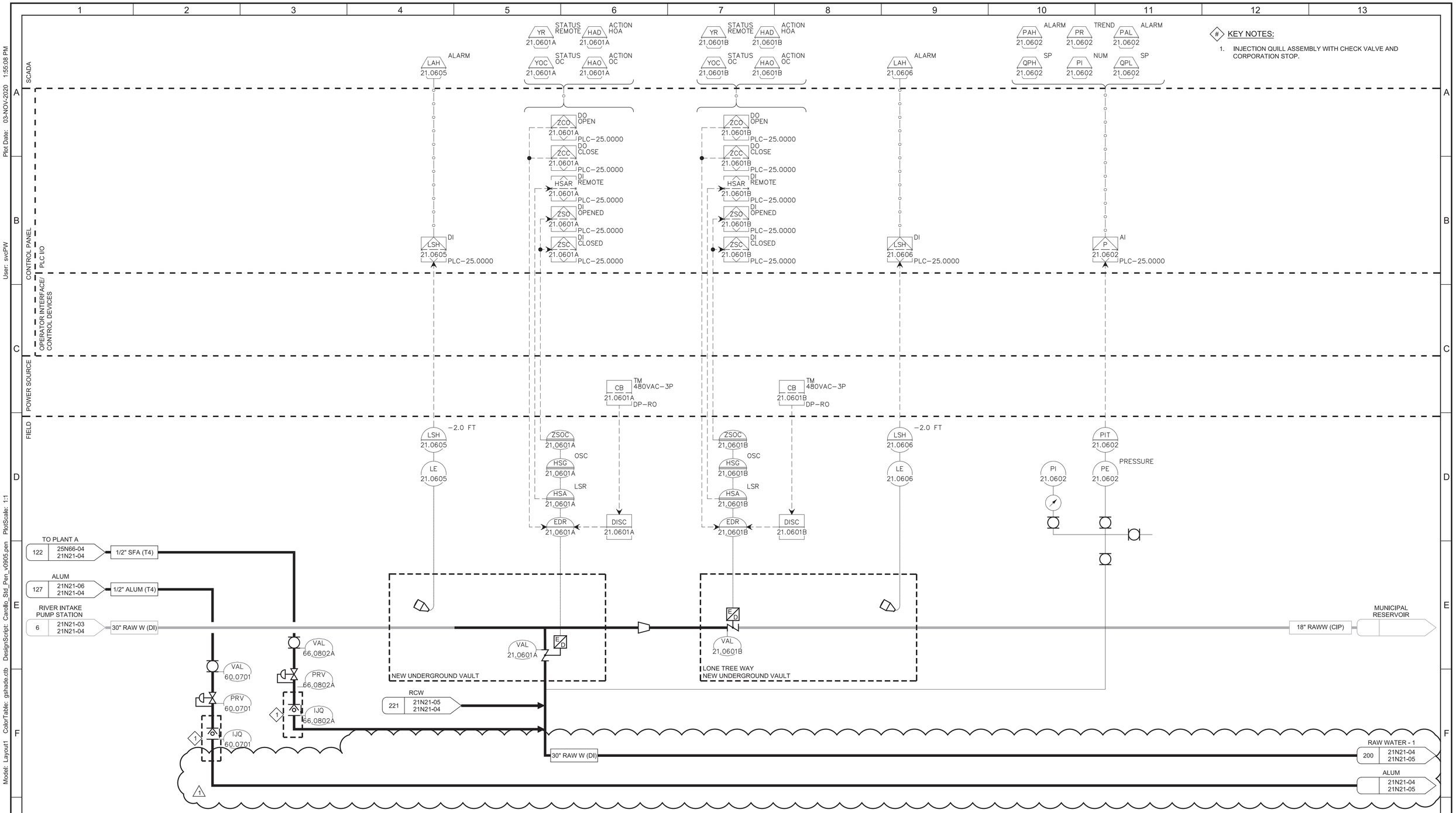

KEY NOTES:

1. INJECTION QUILL ASSEMBLY WITH CHECK VALVE AND CORPORATION STOP.

REV	DATE	BY	DESCRIPTION
1	11-04-20	MMB	REVISED ADDENDUM NO. 3

DESIGNED AWK
DRAWN SGS
CHECKED KMP
DATE SEPTEMBER 2020

Digitally signed by Ashritha Banapuram
Contact Info: Carollo Engineers, Inc.
Date: 2020.11.05 11:18:00-08'00'

REGISTERED PROFESSIONAL ENGINEER ASHRITHA BANAPURAM No. 21815 ELECTRICAL STATE OF CALIFORNIA

carollo

ANTIOCH CALIFORNIA OPPORTUNITY LIVES·HERE

CITY OF ANTIOCH

ANTIOCH BRACKISH WATER DESALINATION PROJECT

INSTRUMENTATION

RAW WATER SUPPLY
TO PLANTS A AND B P&ID - 1

VERIFY SCALES
BAR IS ONE INCH ON ORIGINAL DRAWING
0 1"
IF NOT ONE INCH ON THIS SHEET, ADJUST SCALES ACCORDINGLY

JOB NO. 10024A.10
DRAWING NO. 21N21-04
SHEET NO. 360 OF 498

PROJECT NO. 10024A10 FILE NAME: 10024A1021N2104.dwg

Plot Date: 03-NOV-2020 1:55:08 PM
User: svcPW
PlotScale: 1:1
DesignScript: Carollo_Std_Pen_v0905.pen
ColorTable: gshade.ctb
Model: Layout1
LAST SAVED BY: sshepard

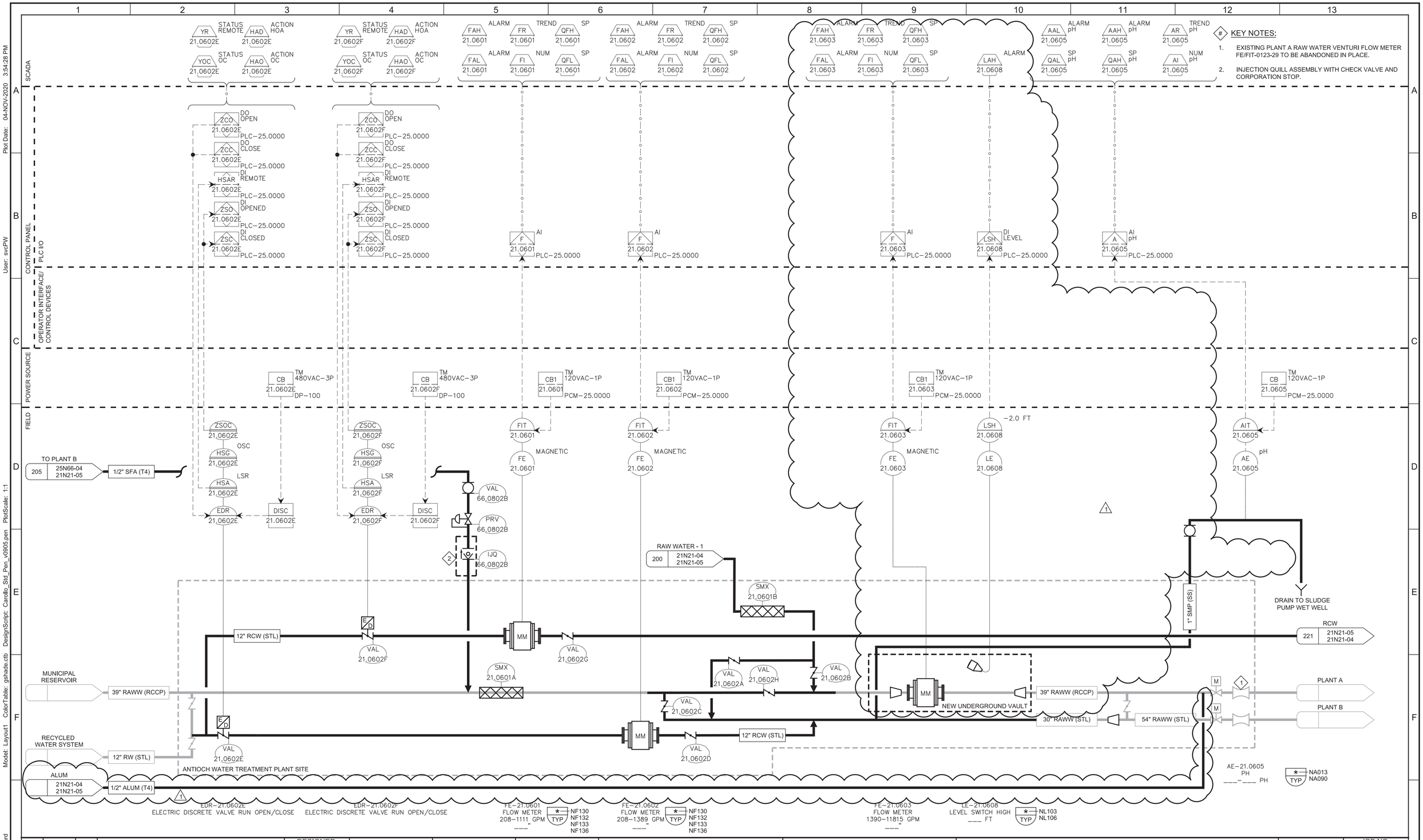

KEY NOTES:

1. EXISTING PLANT A RAW WATER VENTURI FLOW METER FE/FIT-0123-29 TO BE ABANDONED IN PLACE.
2. INJECTION QUILL ASSEMBLY WITH CHECK VALVE AND CORPORATION STOP.

REV	DATE	BY	DESCRIPTION
1	11-04-20	MMB	REVISED PER ADDENDUM NO .3

DESIGNED AWK
DRAWN SGS
CHECKED KMP
DATE SEPTEMBER 2020

Digitally signed by Ashritha Banapuram
Contact Info: Carollo Engineers, Inc.
Date: 2020.11.05 11:15:34-0700

REGISTERED PROFESSIONAL ENGINEER ASHRITHA BANAPURAM No. 21815 ELECTRICAL STATE OF CALIFORNIA

carollo

ANTIOCH CALIFORNIA OPPORTUNITY LIVES·HERE

CITY OF ANTIOCH

ANTIOCH BRACKISH WATER DESALINATION PROJECT

INSTRUMENTATION

RAW WATER SUPPLY TO PLANTS A AND B P&ID - 2

VERIFY SCALES
BAR IS ONE INCH ON ORIGINAL DRAWING
0 1"
IF NOT ONE INCH ON THIS SHEET, ADJUST SCALES ACCORDINGLY

JOB NO. 10024A.10
DRAWING NO. 21N21-05
SHEET NO. 361 OF 498

PROJECT NO. 10024A10 FILE NAME: 10024A1021N2105.dwg

Plot Date: 04-NOV-2020 3:54:28 PM
User: svcPW
PlotScale: 1:1
DesignScript: Carollo_Std_Pen_v0905.pen
ColorTable: gshade.ctb
Model: Layout1
LAST SAVED BY: sshepard

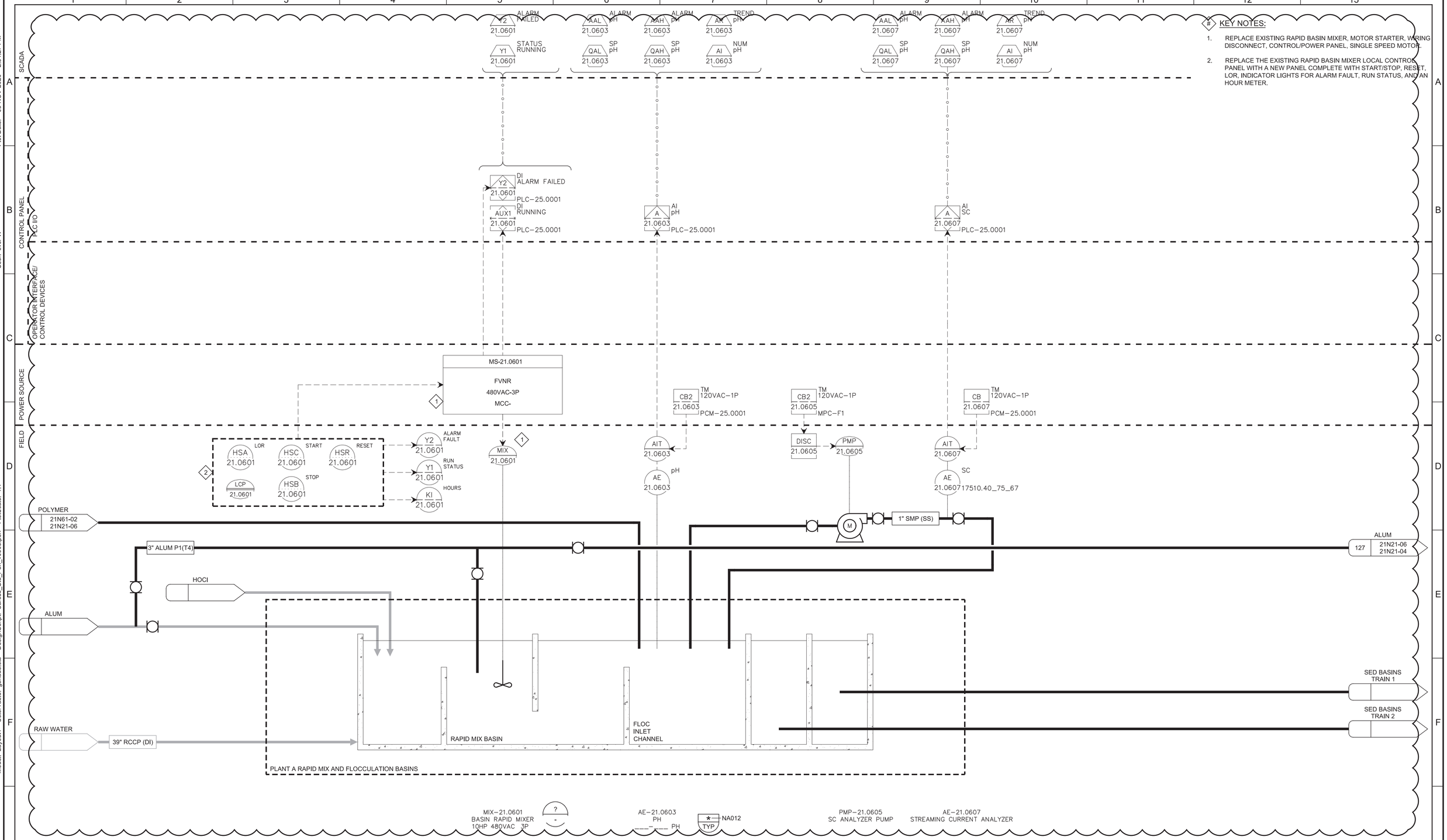

KEY NOTES:

1. REPLACE EXISTING RAPID BASIN MIXER, MOTOR STARTER, WIRING DISCONNECT, CONTROL/POWER PANEL, SINGLE SPEED MOTOR.
2. REPLACE THE EXISTING RAPID BASIN MIXER LOCAL CONTROL PANEL WITH A NEW PANEL COMPLETE WITH START/STOP, RESET, LOR, INDICATOR LIGHTS FOR ALARM FAULT, RUN STATUS, AND AN HOUR METER.

REV	DATE	BY	DESCRIPTION
1	11-04-20	MMB	REVISED ADDENDUM NO. 3

DESIGNED AWK
DRAWN SGS
CHECKED KMP
DATE SEPTEMBER 2020

Digitally signed by Ashritha Banapuram
Contact Info: Carollo Engineers, Inc.
Date: 2020.11.05 11:17:19-08'00'

REGISTERED PROFESSIONAL ENGINEER ASHRITHA BANAPURAM No. 21815 ELECTRICAL STATE OF CALIFORNIA

carollo

ANTIOCH CALIFORNIA OPPORTUNITY LIVES·HERE

CITY OF ANTIOCH
ANTIOCH BRACKISH WATER DESALINATION PROJECT
INSTRUMENTATION
RAW WATER SUPPLY TO PLANTS A AND B P&ID - 3

VERIFY SCALES
BAR IS ONE INCH ON ORIGINAL DRAWING
0 1"
IF NOT ONE INCH ON THIS SHEET, ADJUST SCALES ACCORDINGLY

JOB NO. 10024A.10
DRAWING NO. 21N21-06
SHEET NO. 362 OF 498

PROJECT NO. 10024A10 FILE NAME: 10024A1021N2106.dwg

Plot Date: 03-NOV-2020 2:54:27 PM User: svcPW PlotScale: 1:1 DesignScript: Carollo_Std_Pen_v0905.pen ColorTable: gshade.ctb Model: Layout1 LAST SAVED BY: sshepard

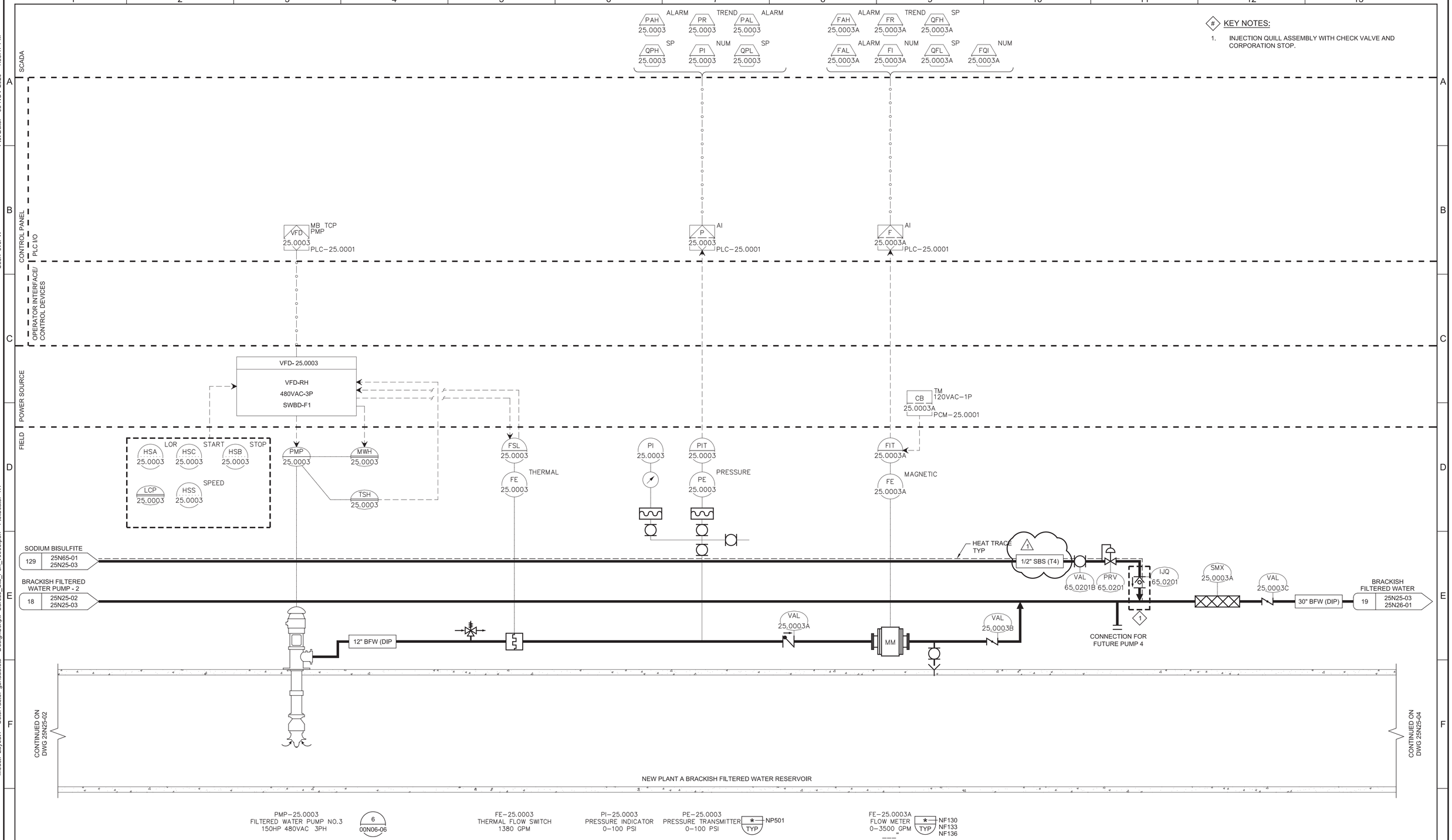

REV	DATE	BY	DESCRIPTION
1	11-04-20	MMB	REVISED PER ADDENDUM NO. 3

DESIGNED AWK
DRAWN SGS
CHECKED KMP
DATE SEPTEMBER 2020

Digitally signed by Ashritha Banapuram
Contact Info: Carollo Engineers, Inc.
Date: 2020.11.05 16:07:37 -08'00'

REGISTERED PROFESSIONAL ENGINEER ASHRITHA BANAPURAM No. 21815 ELECTRICAL STATE OF CALIFORNIA

carollo

ANTIOCH CALIFORNIA OPPORTUNITY LIVES·HERE

CITY OF ANTIOCH

ANTIOCH BRACKISH WATER DESALINATION PROJECT

INSTRUMENTATION

BRACKISH FILTERED WATER PUMPS P&ID - 3

VERIFY SCALES
BAR IS ONE INCH ON ORIGINAL DRAWING
0 1"
IF NOT ONE INCH ON THIS SHEET, ADJUST SCALES ACCORDINGLY

JOB NO. 10024A.10
DRAWING NO. 25N25-03
SHEET NO. 382 OF 498

Plot Date: 05-NOV-2020 1:58:47 PM
User: svcPW
PlotScale: 1:1
DesignScript: Carollo_Std_Pen_v0905.pen
ColorTable: gshade.ctb
Model: Layout1
LAST SAVED BY: sshepard

PROJECT NO. 10024A10 FILE NAME: 10024A1025N2503.dwg

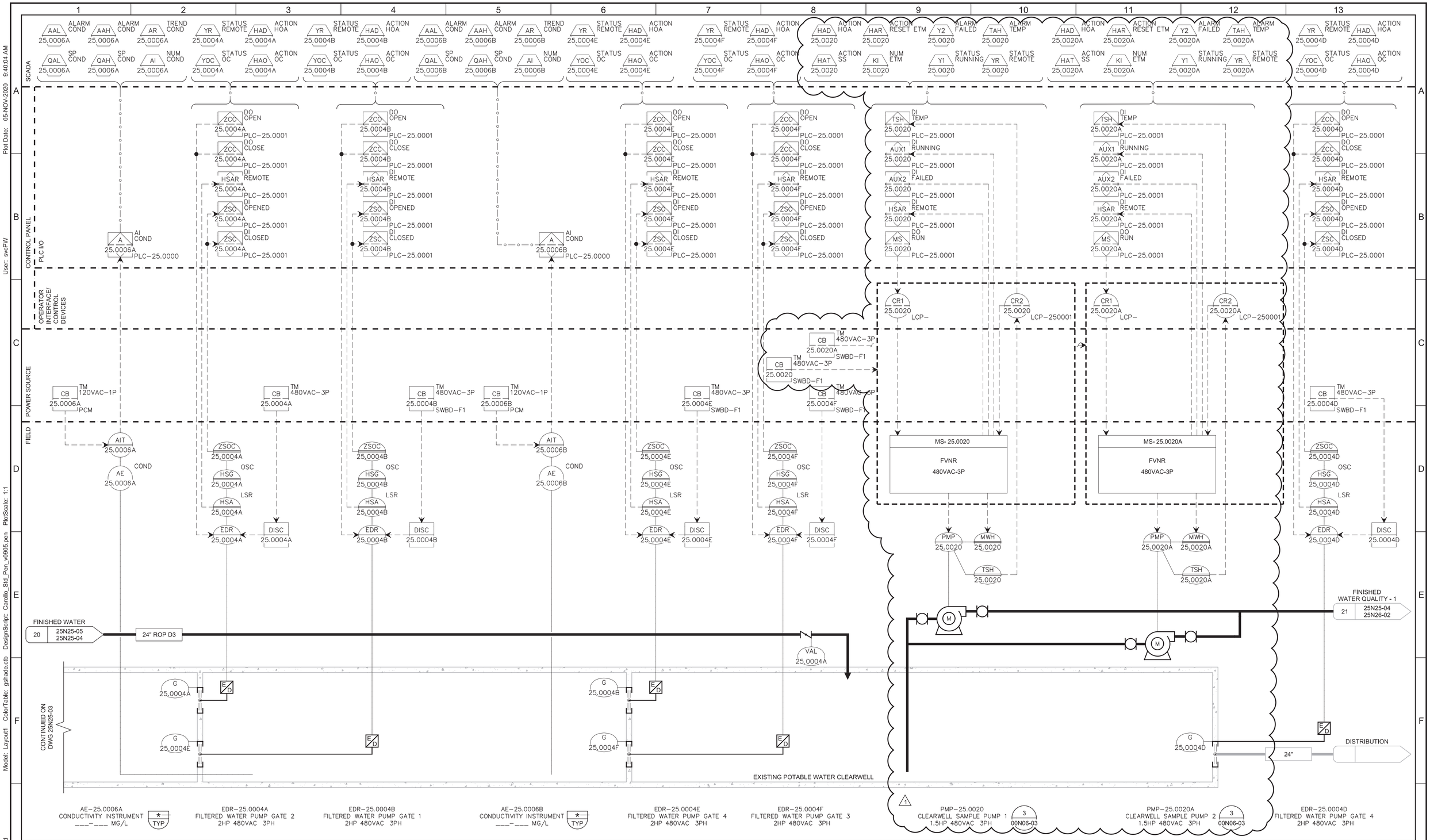

REV	DATE	BY	DESCRIPTION
1	11-04-20	MMB	REVISED PER ADDENDUM NO. 3

DESIGNED AWK
DRAWN SGS
CHECKED KMP
DATE SEPTEMBER 2020

Digitally signed by Ashritha Banapuram
Contact Info: Carollo Engineers, Inc.
Date: 2020.11.05 11:17:32-0700

REGISTERED PROFESSIONAL ENGINEER ASHRITHA BANAPURAM No. 21815 ELECTRICAL STATE OF CALIFORNIA

carollo®

ANTIOCH CALIFORNIA OPPORTUNITY LIVES·HERE

CITY OF ANTIOCH

ANTIOCH BRACKISH WATER DESALINATION PROJECT

INSTRUMENTATION

BRACKISH FILTERED WATER PUMP STATION AND POTABLE WATER CLEARWELL P&ID

VERIFY SCALES
BAR IS ONE INCH ON ORIGINAL DRAWING
0 1"
IF NOT ONE INCH ON THIS SHEET, ADJUST SCALES ACCORDINGLY

JOB NO. 10024A.10
DRAWING NO. 25N25-04
SHEET NO. 383 OF 498

PROJECT NO. 10024A10 FILE NAME: 10024A1025N2504.dwg

Model: Layout1 ColorTable: gshade.ctb DesignScript: Carollo_Std_Pen_v0905.pen PlotScale: 1:1 User: svcPW Plot Date: 05-NOV-2020 9:40:04 AM LAST SAVED BY: sshepard

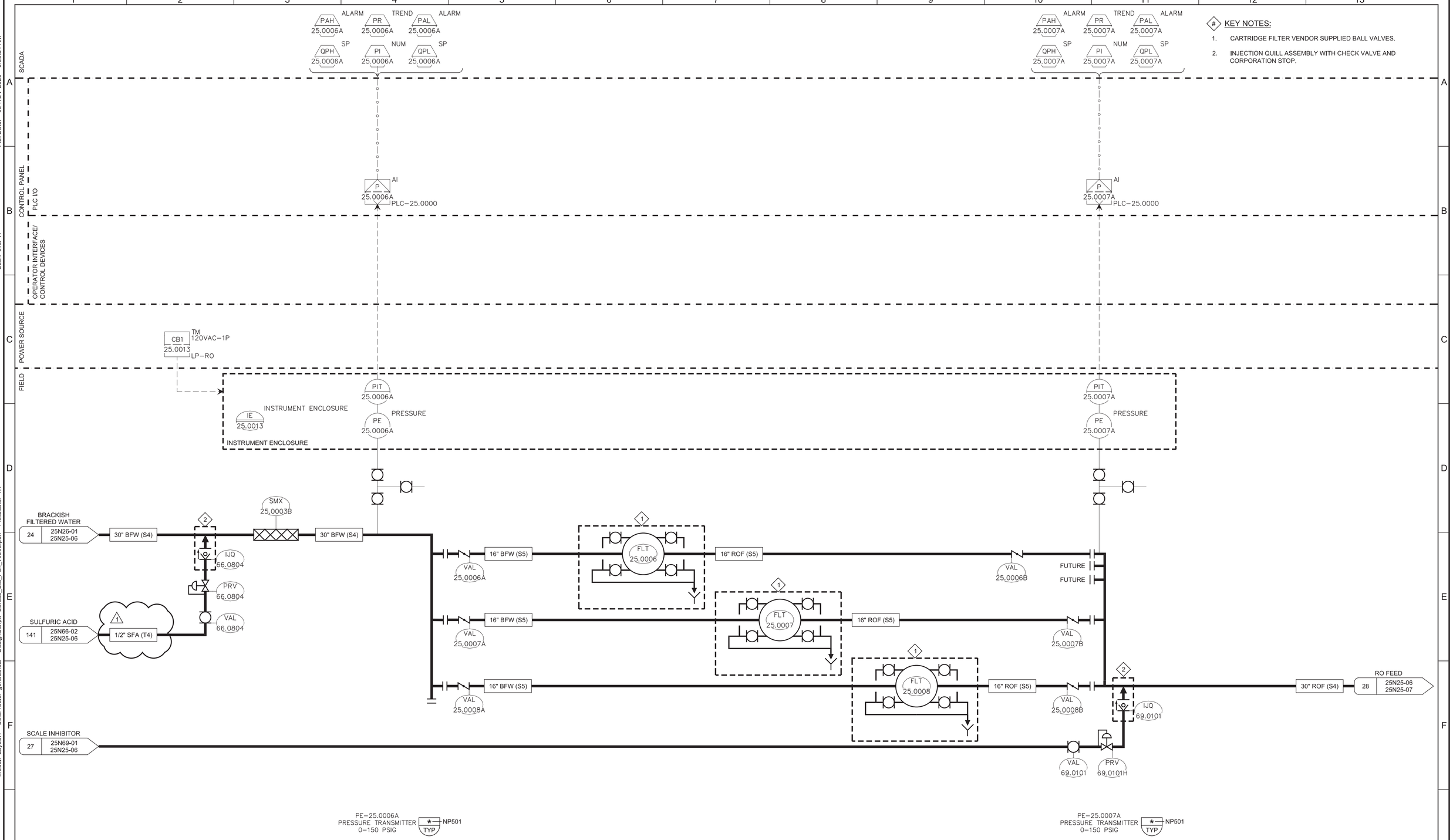

KEY NOTES:

1. CARTRIDGE FILTER VENDOR SUPPLIED BALL VALVES.
2. INJECTION QUILL ASSEMBLY WITH CHECK VALVE AND CORPORATION STOP.

REV	DATE	BY	DESCRIPTION
1	11-04-20	MMB	REVISED PER ADDENDUM NO. 3

DESIGNED AWK
DRAWN ESW
CHECKED KMP
DATE SEPTEMBER 2020

Digitally signed by Ashritha Banapuram
Contact Info: Carollo Engineers, Inc.
Date: 2020.11.05 11:16:31 -08'00'

REGISTERED PROFESSIONAL ENGINEER ASHRITHA BANAPURAM No. 21815 ELECTRICAL STATE OF CALIFORNIA

carollo

ANTIOCH CALIFORNIA OPPORTUNITY LIVES·HERE

CITY OF ANTIOCH

ANTIOCH BRACKISH WATER DESALINATION PROJECT

INSTRUMENTATION

RO CARTRIDGE FILTERS P&ID - 1

VERIFY SCALES
BAR IS ONE INCH ON ORIGINAL DRAWING
0 1"
IF NOT ONE INCH ON THIS SHEET, ADJUST SCALES ACCORDINGLY

JOB NO. 10024A.10
DRAWING NO. 25N25-06
SHEET NO. 385 OF 498

PROJECT NO. 10024A10 FILE NAME: 10024A1025N2506.dwg

Plot Date: 05-NOV-2020 9:38:24 AM
User: svcPW
PlotScale: 1:1
DesignScript: Carollo_Std_Pen_v0905.pen
ColorTable: gshade.ctb
Model: Layout1
LAST SAVED BY: sshepard

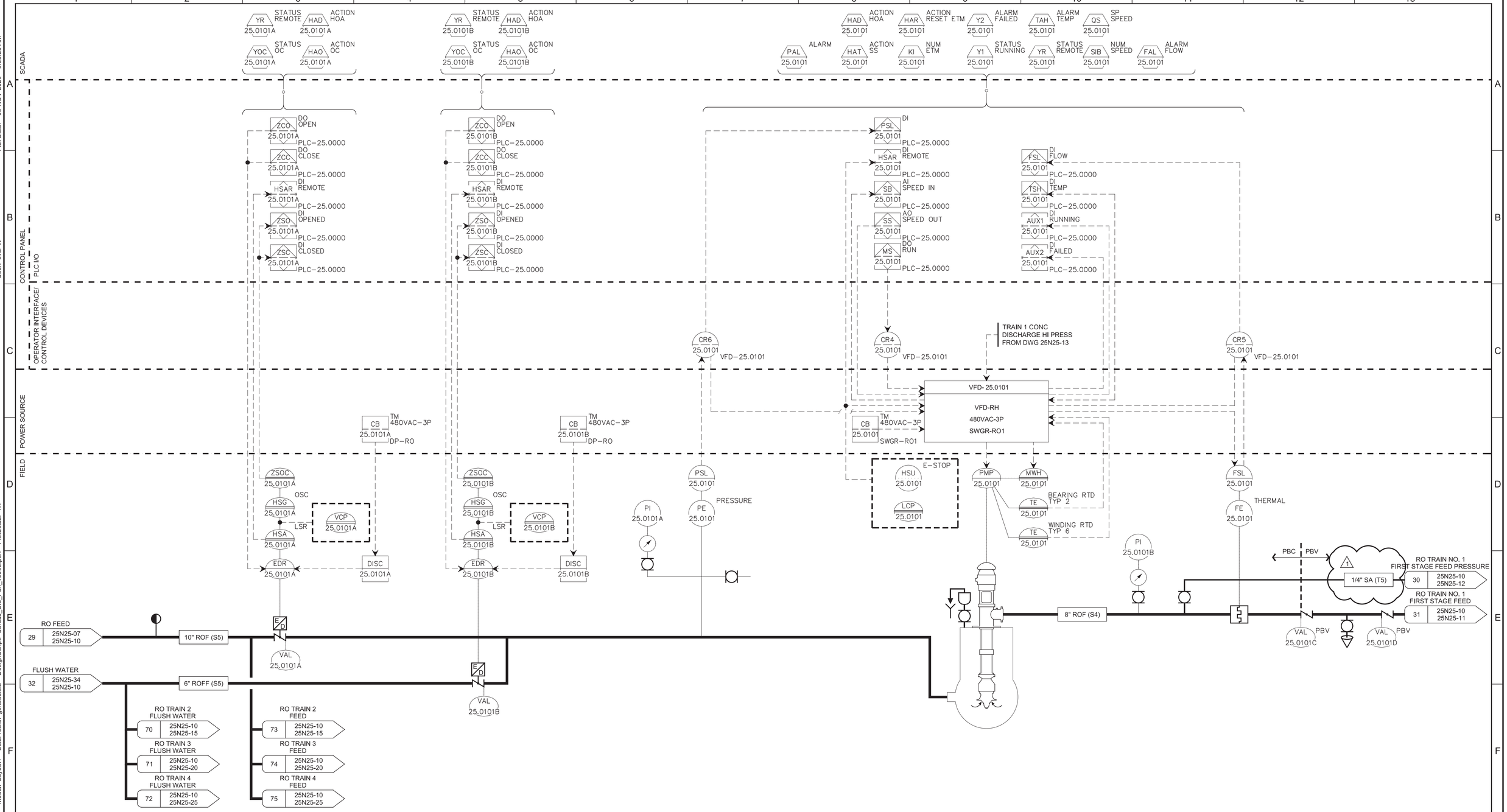

REV	DATE	BY	DESCRIPTION
1	11-04-20	MMB	REVISED PER ADDENDUM NO. 3

DESIGNED AWK
DRAWN ESW
CHECKED KMP
DATE SEPTEMBER 2020

Digitally signed by Ashritha Banapuram
Contact Info: Carollo Engineers, Inc.
Date: 2020.11.05 11:12:00 -08'00'

REGISTERED PROFESSIONAL ENGINEER ASHRITHA BANAPURAM No. 21815 ELECTRICAL STATE OF CALIFORNIA

carollo®

ANTIOCH CALIFORNIA OPPORTUNITY LIVES·HERE

CITY OF ANTIOCH

ANTIOCH BRACKISH WATER DESALINATION PROJECT

INSTRUMENTATION

RO TRAIN NO. 1
FEED PUMP P&ID

VERIFY SCALES
BAR IS ONE INCH ON ORIGINAL DRAWING
0 1"
IF NOT ONE INCH ON THIS SHEET, ADJUST SCALES ACCORDINGLY

JOB NO. 10024A.10
DRAWING NO. 25N25-10
SHEET NO. 387 OF 498

Model: Layout1 ColorTable: gshade.ctb DesignScript: Carollo_Std_Pen_v0905.pen PlotScale: 1:1 User: svcPW Plot Date: 05-NOV-2020 9:38:26 AM LAST SAVED BY: sshepard

PROJECT NO. 10024A10 FILE NAME: 10024A1025N2510.dwg

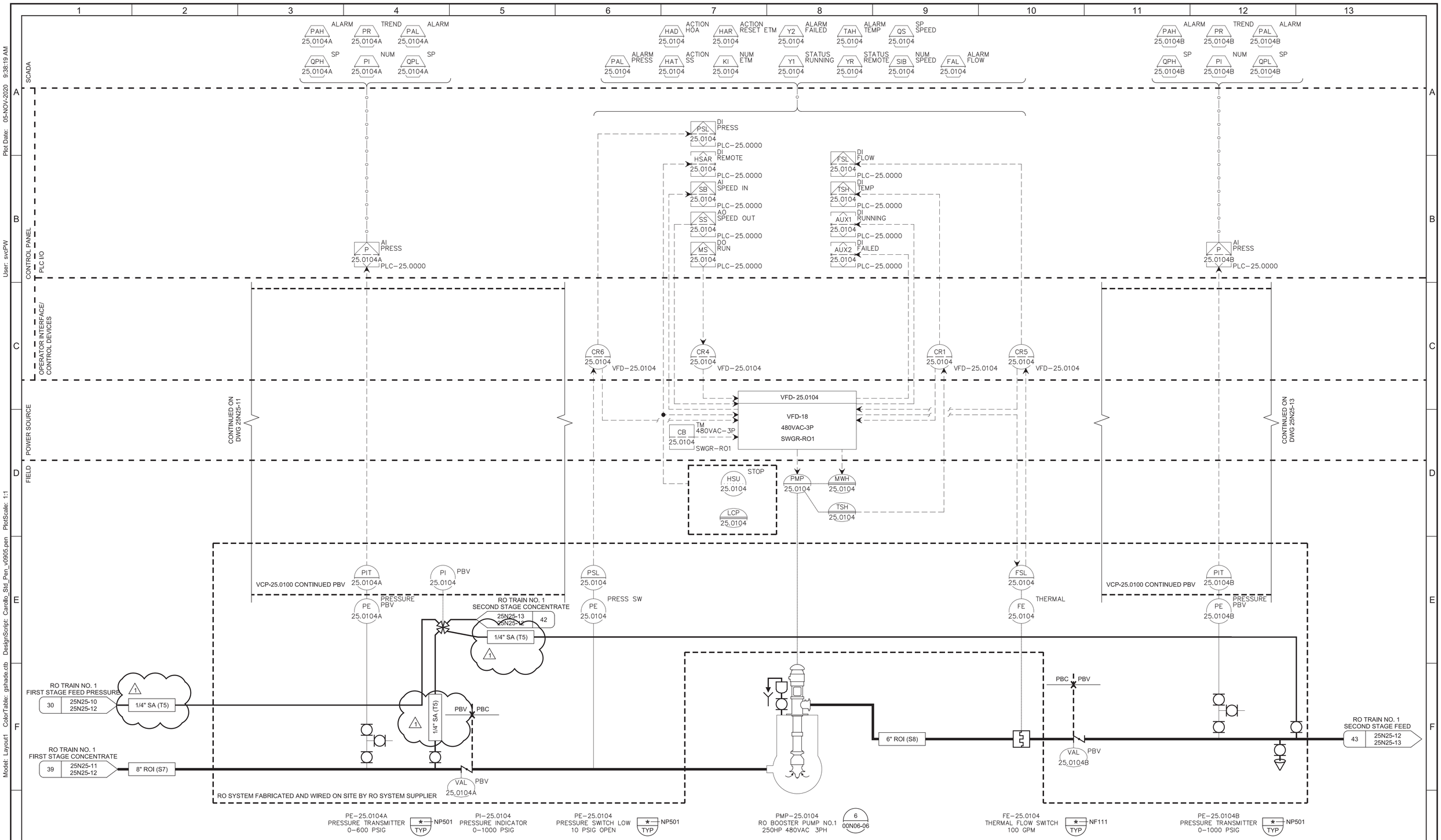

REV	DATE	BY	DESCRIPTION
1	11-04-20	MMB	REVISED PER ADDENDUM NO. 3

DESIGNED AWK
DRAWN ESW
CHECKED KMP
DATE SEPTEMBER 2020

Digitally signed by Ashritha Banapuram
Contact Info: Carollo Engineers, Inc.
Date: 2020.11.05 11:17:05-06'00'

REGISTERED PROFESSIONAL ENGINEER ASHRITHA BANAPURAM No. 21815 ELECTRICAL STATE OF CALIFORNIA

carollo

ANTIOCH CALIFORNIA OPPORTUNITY LIVES·HERE

CITY OF ANTIOCH
ANTIOCH BRACKISH WATER DESALINATION PROJECT
INSTRUMENTATION
RO TRAIN NO. 1
INTERSTAGE PUMP P&ID

VERIFY SCALES
BAR IS ONE INCH ON ORIGINAL DRAWING
0 1"
IF NOT ONE INCH ON THIS SHEET, ADJUST SCALES ACCORDINGLY

JOB NO. 10024A.10
DRAWING NO. 25N25-12
SHEET NO. 389 OF 498

PROJECT NO. 10024A10 FILE NAME: 10024A1025N2512.dwg

LAST SAVED BY: sshepard Model: Layout1 ColorTable: gshade.ctb DesignScript: Carollo_Std_Pen_v0905.pen PlotScale: 1:1 User: svcPW Plot Date: 05-NOV-2020 9:38:19 AM

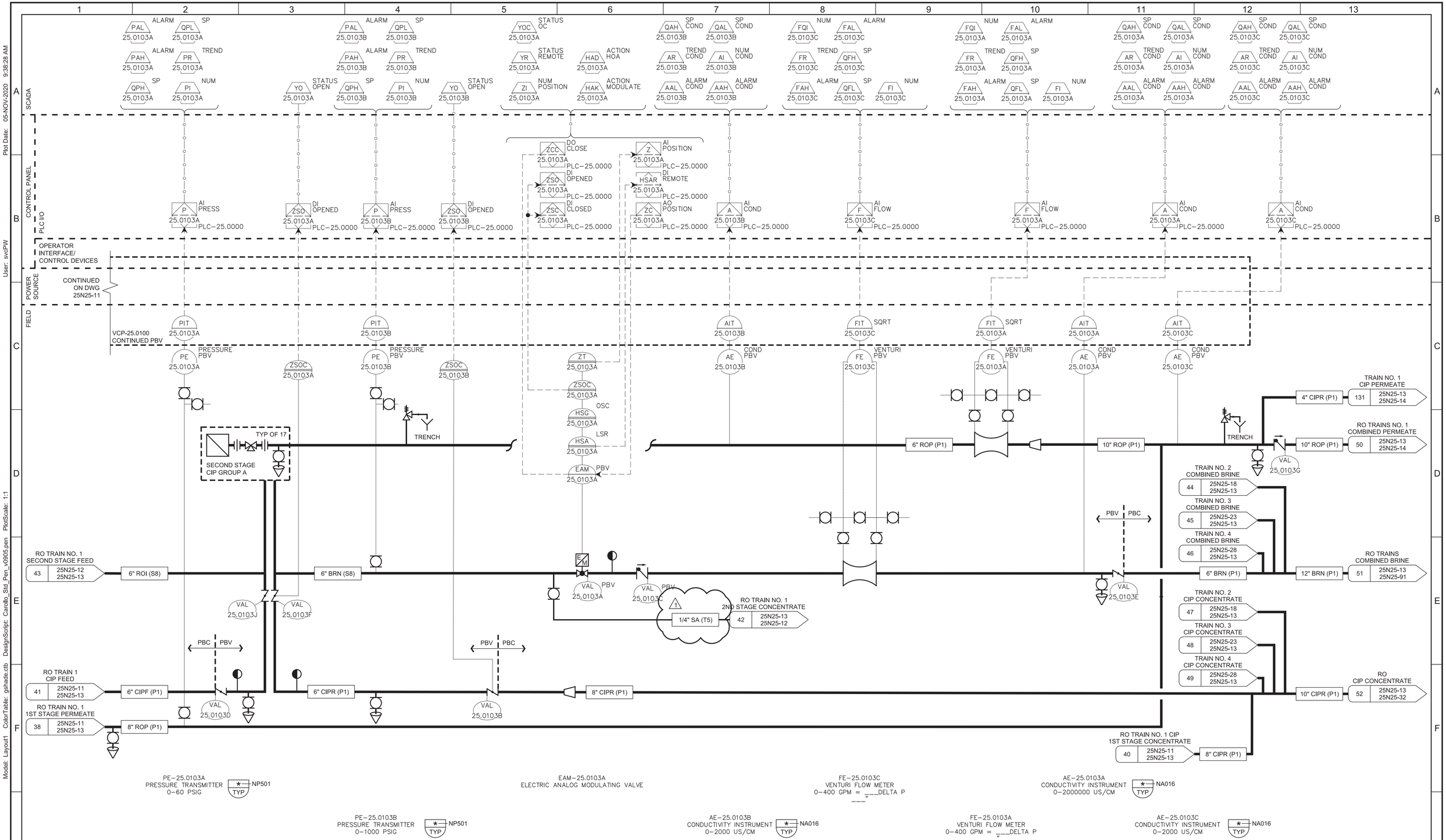

REV	DATE	BY	DESCRIPTION
1	11-04-20	MMB	REVISED PER ADDENDUM NO. 3

DESIGNED AWK
DRAWN ESW
CHECKED KMP
DATE SEPTEMBER 2020

Digitally signed by Ashritha Banapuram
Contact Info: Carollo Engineers, Inc.
Date: 2020.11.05 11:16:38-0700

REGISTERED PROFESSIONAL ENGINEER ASHRITHA BANAPURAM No. 21815 ELECTRICAL STATE OF CALIFORNIA

carollo

ANTIOCH CALIFORNIA OPPORTUNITY LIVES·HERE

CITY OF ANTIOCH

ANTIOCH BRACKISH WATER DESALINATION PROJECT

INSTRUMENTATION

RO TRAIN NO. 1
SECOND STAGE P&ID

VERIFY SCALES
BAR IS ONE INCH ON ORIGINAL DRAWING
0 1"
IF NOT ONE INCH ON THIS SHEET, ADJUST SCALES ACCORDINGLY

JOB NO. 10024A.10
DRAWING NO. 25N25-13
SHEET NO. 390 OF 498

PROJECT NO. 10024A10 FILE NAME: 10024A1025N2513.dwg

Plot Date: 05-NOV-2020 9:38:28 AM User: svcPW PlotScale: 1:1 DesignScript: Carollo_Std_Pen_v0905.pen ColorTable: gshade.ctb Model: Layout1 LAST SAVED BY: sshepard

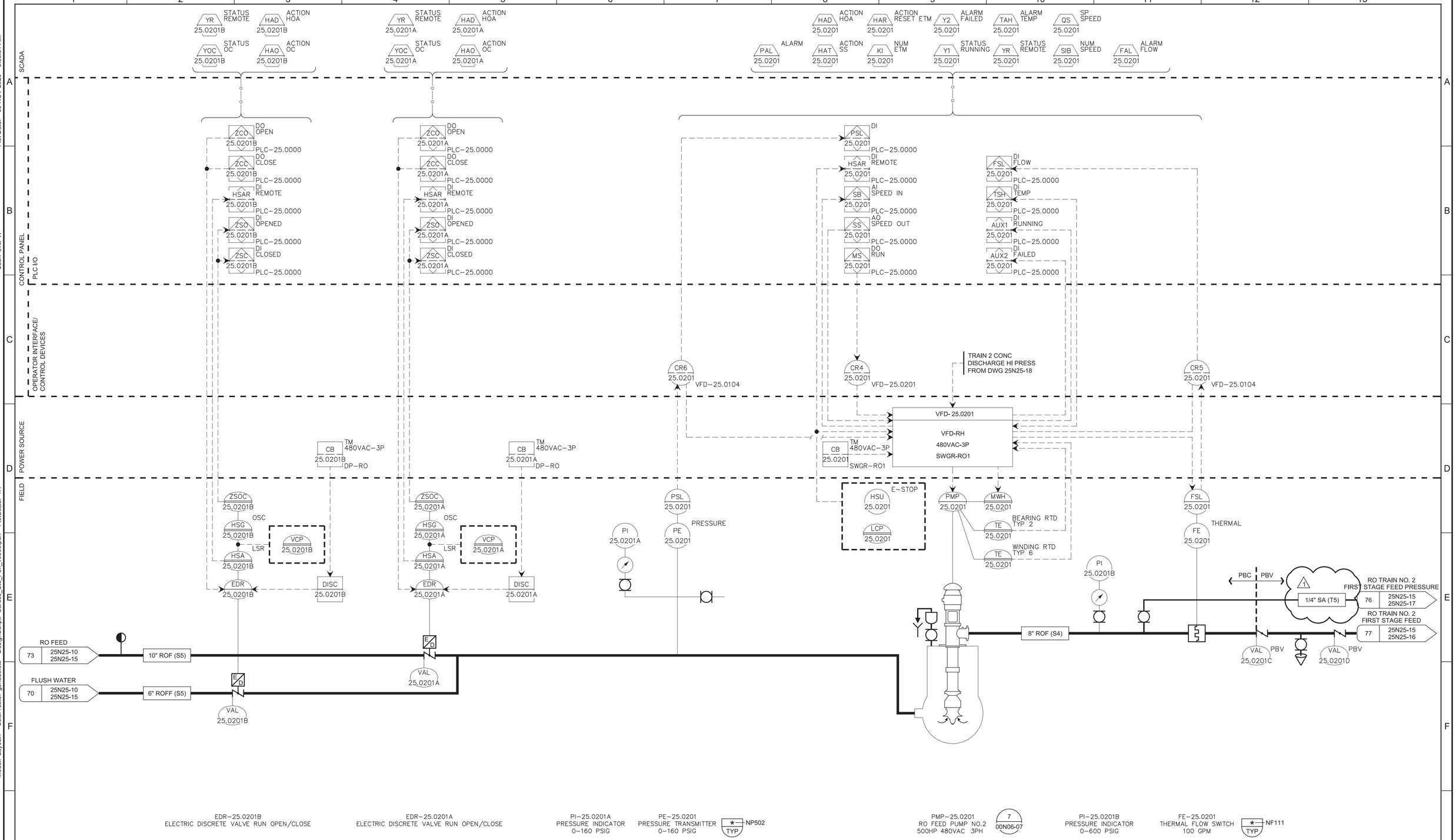

REV	DATE	BY	DESCRIPTION
1	11-04-20	MMB	REVISED PER ADDENDUM NO. 3

DESIGNED AWK
DRAWN SGS
CHECKED KMP
DATE SEPTEMBER 2020

Digitally signed by Ashritha Banapuram
Contact Info: Carollo Engineers, Inc.
Date: 2020.11.05 11:16:26-08'00'

REGISTERED PROFESSIONAL ENGINEER ASHRITHA BANAPURAM No. 21815 ELECTRICAL STATE OF CALIFORNIA

carollo

ANTIOCH CALIFORNIA OPPORTUNITY LIVES·HERE

CITY OF ANTIOCH

ANTIOCH BRACKISH WATER DESALINATION PROJECT

INSTRUMENTATION

RO TRAIN NO. 2
FEED PUMP P&ID

VERIFY SCALES
BAR IS ONE INCH ON ORIGINAL DRAWING
0 1"
IF NOT ONE INCH ON THIS SHEET, ADJUST SCALES ACCORDINGLY

JOB NO. 10024A.10
DRAWING NO. 25N25-15
SHEET NO. 392 OF 498

PROJECT NO. 10024A10 FILE NAME: 10024A1025N2515.dwg

Model: Layout1 ColorTable: gshade.ctb DesignScript: Carollo_Std_Pen_v0905.pen PlotScale: 1:1 User: svcPW Plot Date: 05-NOV-2020 9:38:31 AM LAST SAVED BY: sshepard

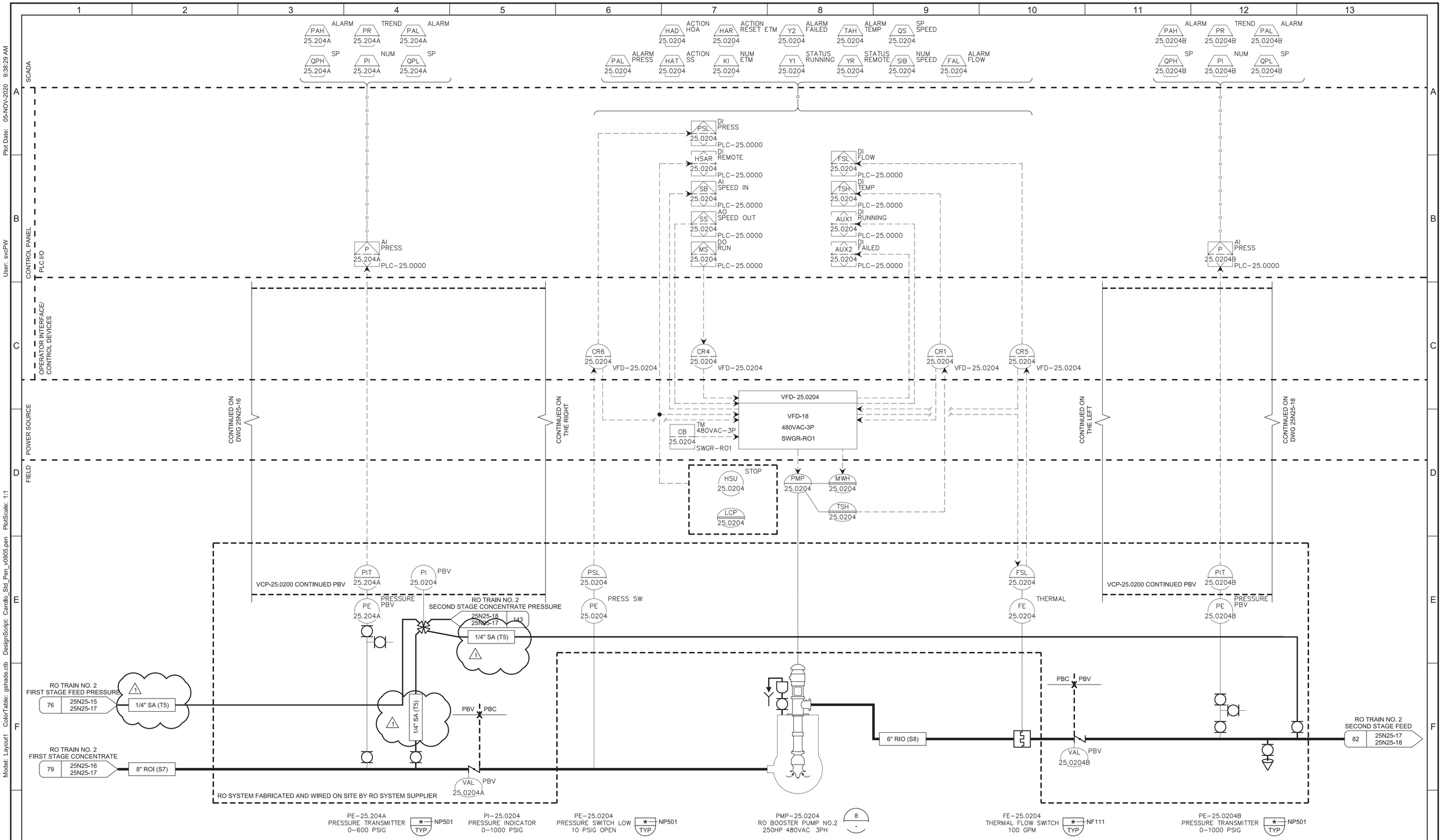

REV	DATE	BY	DESCRIPTION
1	11-04-20	MMB	REVISED PER ADDENDUM NO. 3

DESIGNED AWK
DRAWN SGS
CHECKED KMP
DATE SEPTEMBER 2020

Digitally signed by Ashritha Banapuram
Contact Info: Carollo Engineers, Inc.
Date: 2020.11.05 11:21:53-06'00'

REGISTERED PROFESSIONAL ENGINEER ASHRITHA BANAPURAM No. 21815 ELECTRICAL STATE OF CALIFORNIA

carollo

ANTIOCH CALIFORNIA OPPORTUNITY LIVES·HERE

CITY OF ANTIOCH
ANTIOCH BRACKISH WATER DESALINATION PROJECT
INSTRUMENTATION
RO TRAIN NO. 2
INTERSTAGE PUMP P&ID

VERIFY SCALES
BAR IS ONE INCH ON ORIGINAL DRAWING
0 1"
IF NOT ONE INCH ON THIS SHEET, ADJUST SCALES ACCORDINGLY

JOB NO. 10024A.10
DRAWING NO. 25N25-17
SHEET NO. 394 OF 498

PROJECT NO. 10024A10 FILE NAME: 10024A1025N2517.dwg

Plot Date: 05-NOV-2020 9:38:29 AM User: svcPW Model: Layout1 ColorTable: gshade.ctb DesignScript: Carollo_Std_Pen_v0905.pen PlotScale: 1:1 LAST SAVED BY: sshepard

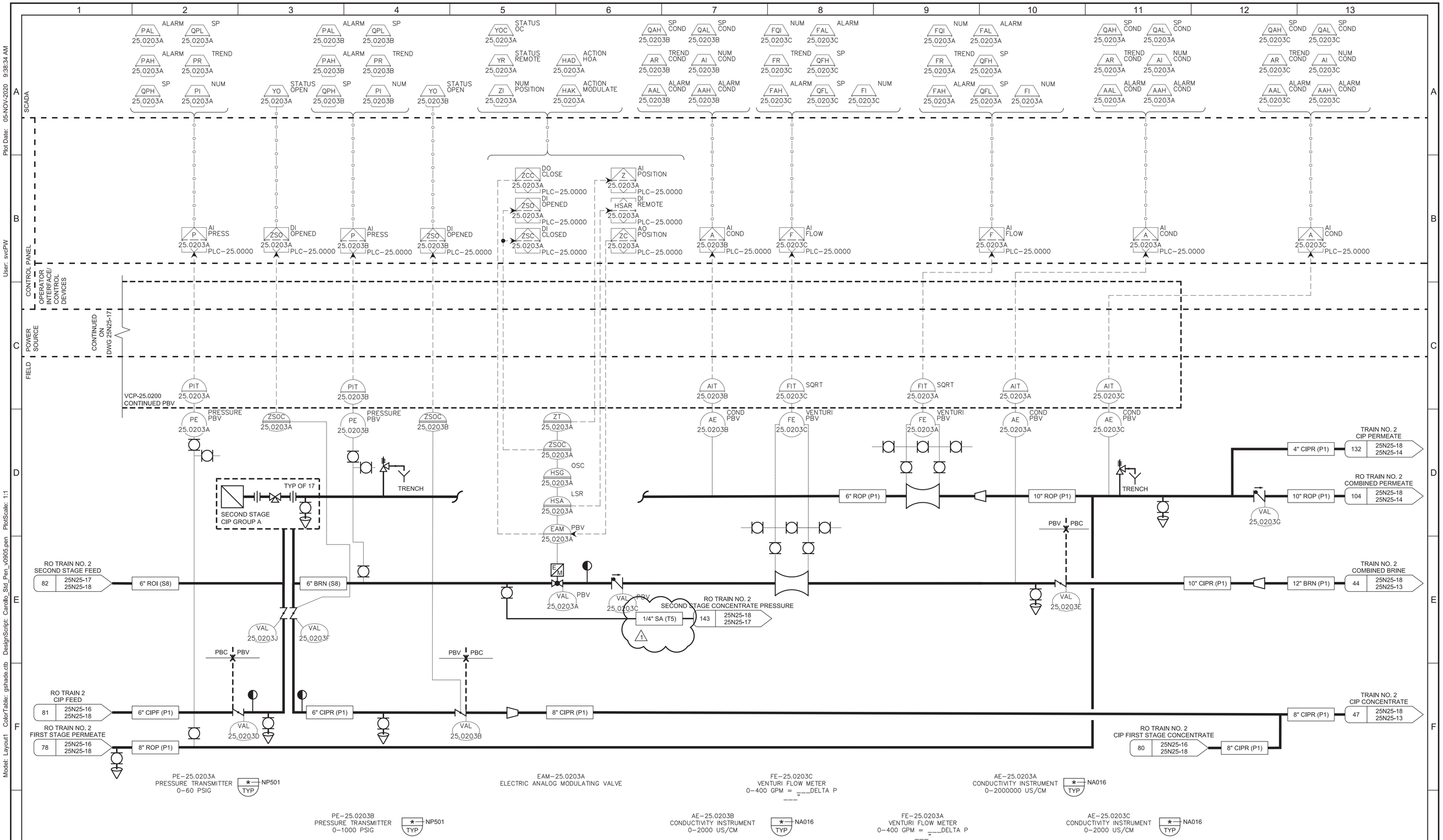

REV	DATE	BY	DESCRIPTION
1	11-04-20	MMB	REVISED PER ADDENDUM NO. 3

DESIGNED AWK
DRAWN SGS
CHECKED KMP
DATE SEPTEMBER 2020

Digitally signed by Ashritha Banapuram
Contact Info: Carollo Engineers, Inc.
Date: 2020.11.05 11:21:27-08'00'

REGISTERED PROFESSIONAL ENGINEER ASHRITHA BANAPURAM No. 21815 ELECTRICAL STATE OF CALIFORNIA

carollo®

ANTIOCH CALIFORNIA OPPORTUNITY LIVES·HERE

CITY OF ANTIOCH

ANTIOCH BRACKISH WATER DESALINATION PROJECT

INSTRUMENTATION

RO TRAIN NO. 2
SECOND STAGE P&ID

VERIFY SCALES
BAR IS ONE INCH ON ORIGINAL DRAWING
0 1"
IF NOT ONE INCH ON THIS SHEET, ADJUST SCALES ACCORDINGLY

JOB NO. 10024A.10
DRAWING NO. 25N25-18
SHEET NO. 395 OF 498

PROJECT NO. 10024A10 FILE NAME: 10024A1025N2518.dwg

Plot Date: 05-NOV-2020 9:38:34 AM User: svcPW PlotScale: 1:1 DesignScript: Carollo_Std_Pen_v0905.pen ColorTable: gshade.ctb Model: Layout1 LAST SAVED BY: sshepard

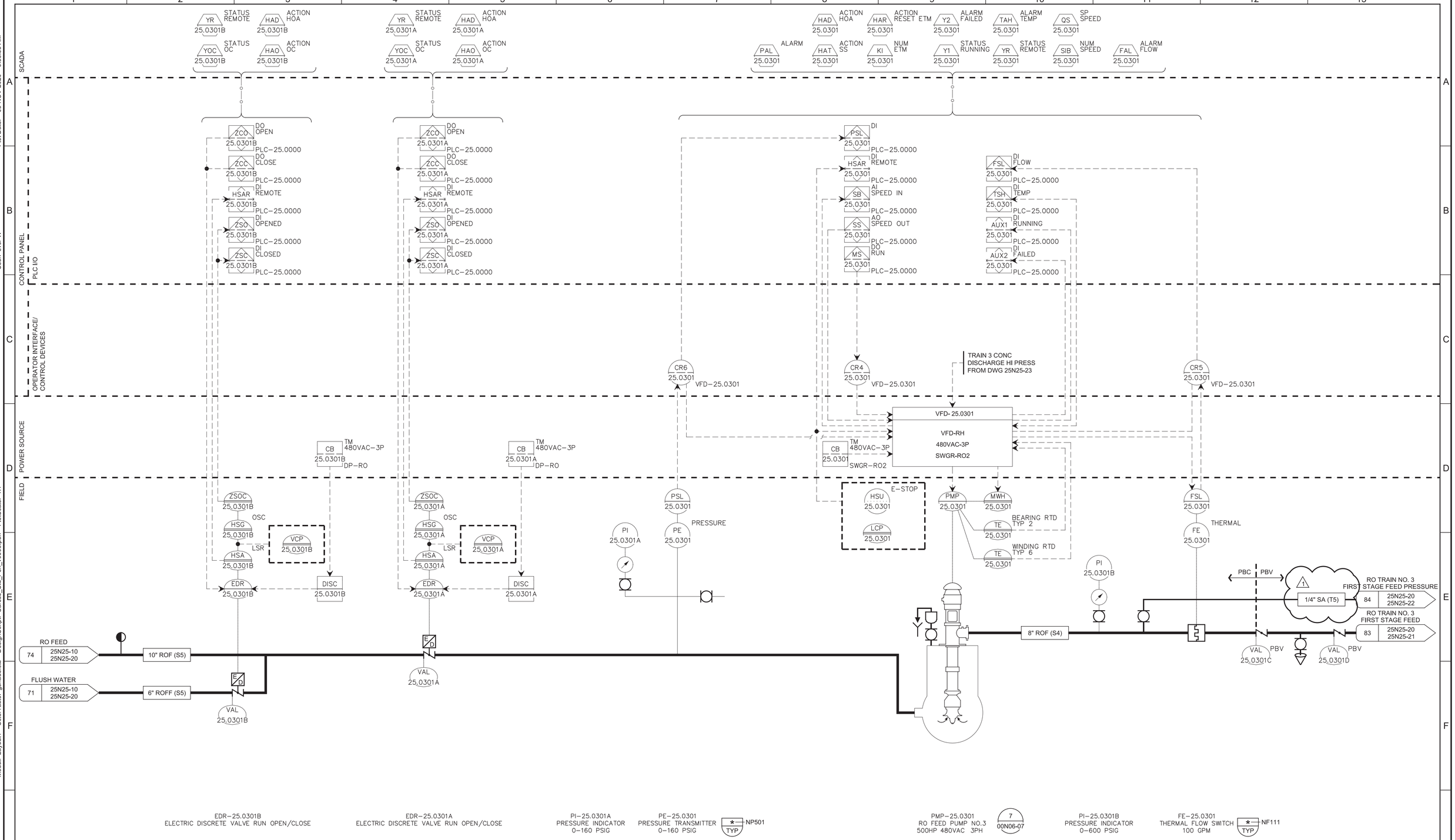

REV	DATE	BY	DESCRIPTION
1	11-04-20	MMB	REVISED PER ADDENDUM NO. 3

DESIGNED AWK
DRAWN SGS
CHECKED KMP
DATE SEPTEMBER 2020

Digitally signed by Ashritha Banapuram
Contact Info: Carollo Engineers, Inc.
Date: 2020.11.05 11:20:39-08'00'

REGISTERED PROFESSIONAL ENGINEER ASHRITHA BANAPURAM No. 21815 ELECTRICAL STATE OF CALIFORNIA

carollo

ANTIOCH CALIFORNIA OPPORTUNITY LIVES·HERE

CITY OF ANTIOCH

ANTIOCH BRACKISH WATER DESALINATION PROJECT

INSTRUMENTATION

RO TRAIN NO. 3
FEED PUMP P&ID

VERIFY SCALES
BAR IS ONE INCH ON ORIGINAL DRAWING
0 1"
IF NOT ONE INCH ON THIS SHEET, ADJUST SCALES ACCORDINGLY

JOB NO. 10024A.10
DRAWING NO. 25N25-20
SHEET NO. 396 OF 498

PROJECT NO. 10024A10 FILE NAME: 10024A1025N2520.dwg

Plot Date: 05-NOV-2020 9:38:35 AM User: svcPW PlotScale: 1:1 DesignScript: Carollo_Std_Pen_v0905.pen ColorTable: gshade.ctb Model: Layout1 LAST SAVED BY: sshepard

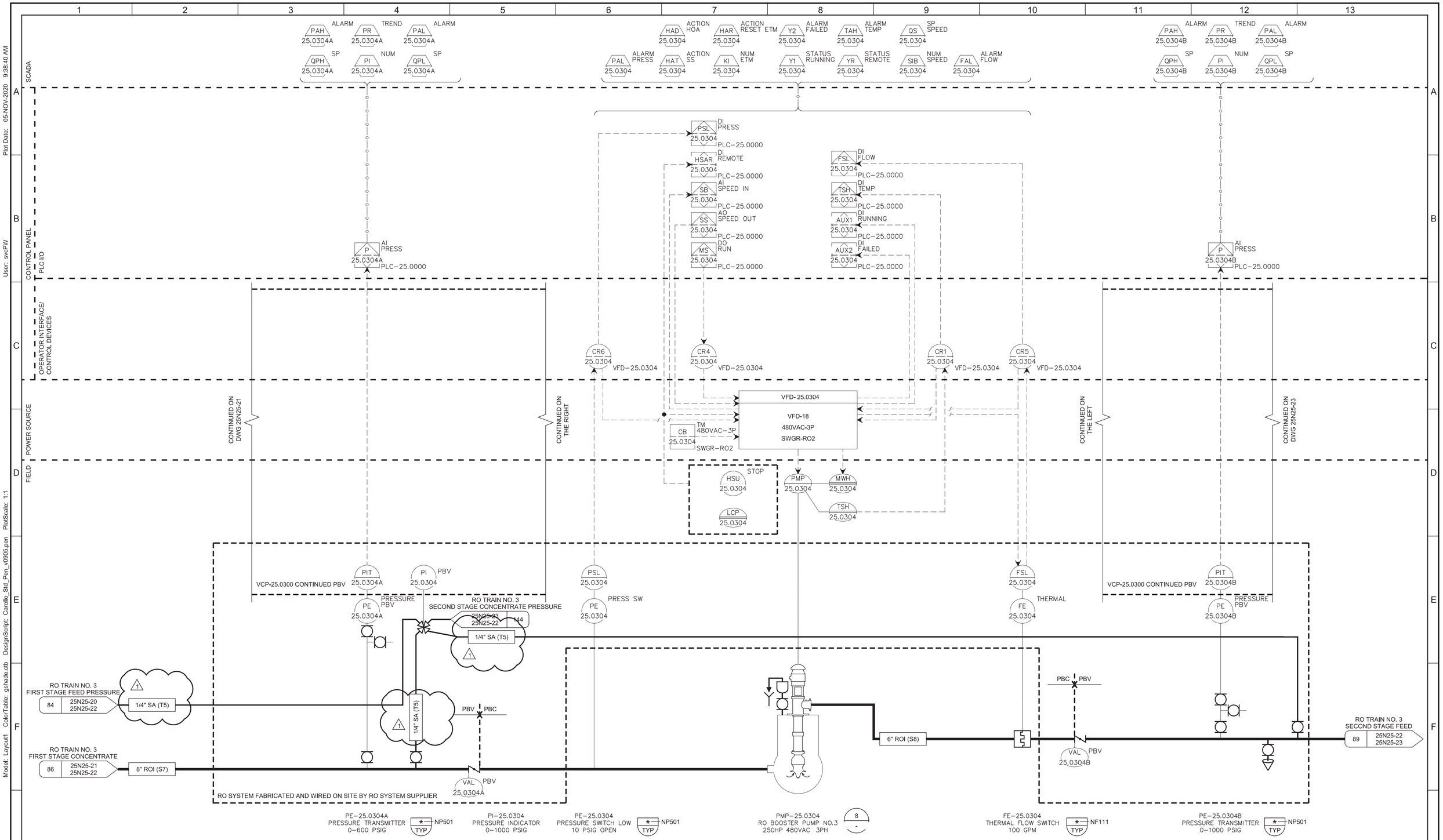

REV	DATE	BY	DESCRIPTION
1	11-04-20	MMB	REVISED PER ADDENDUM NO. 3

DESIGNED AWK
DRAWN SGS
CHECKED KMP
DATE SEPTEMBER 2020

Digitally signed by Ashritha Banapuram
Contact Info: Carollo Engineers, Inc.
Date: 2020.11.05 11:19:20-08'00'

REGISTERED PROFESSIONAL ENGINEER ASHRITHA BANAPURAM No. 21815 ELECTRICAL STATE OF CALIFORNIA

carollo

ANTIOCH CALIFORNIA OPPORTUNITY LIVES·HERE

CITY OF ANTIOCH

ANTIOCH BRACKISH WATER DESALINATION PROJECT

INSTRUMENTATION

RO TRAIN NO. 3
INTERSTAGE PUMP P&ID

VERIFY SCALES
BAR IS ONE INCH ON ORIGINAL DRAWING
0 1"
IF NOT ONE INCH ON THIS SHEET, ADJUST SCALES ACCORDINGLY

JOB NO. 10024A.10
DRAWING NO. 25N25-22
SHEET NO. 398 OF 498

Plot Date: 05-NOV-2020 9:38:40 AM
User: svcPW
PlotScale: 1:1
DesignScript: Carollo_Std_Pen_v0905.pen
ColorTable: gshade.ctb
Model: Layout1
LAST SAVED BY: sshepard

PROJECT NO. 10024A10 FILE NAME: 10024A1025N2522.dwg

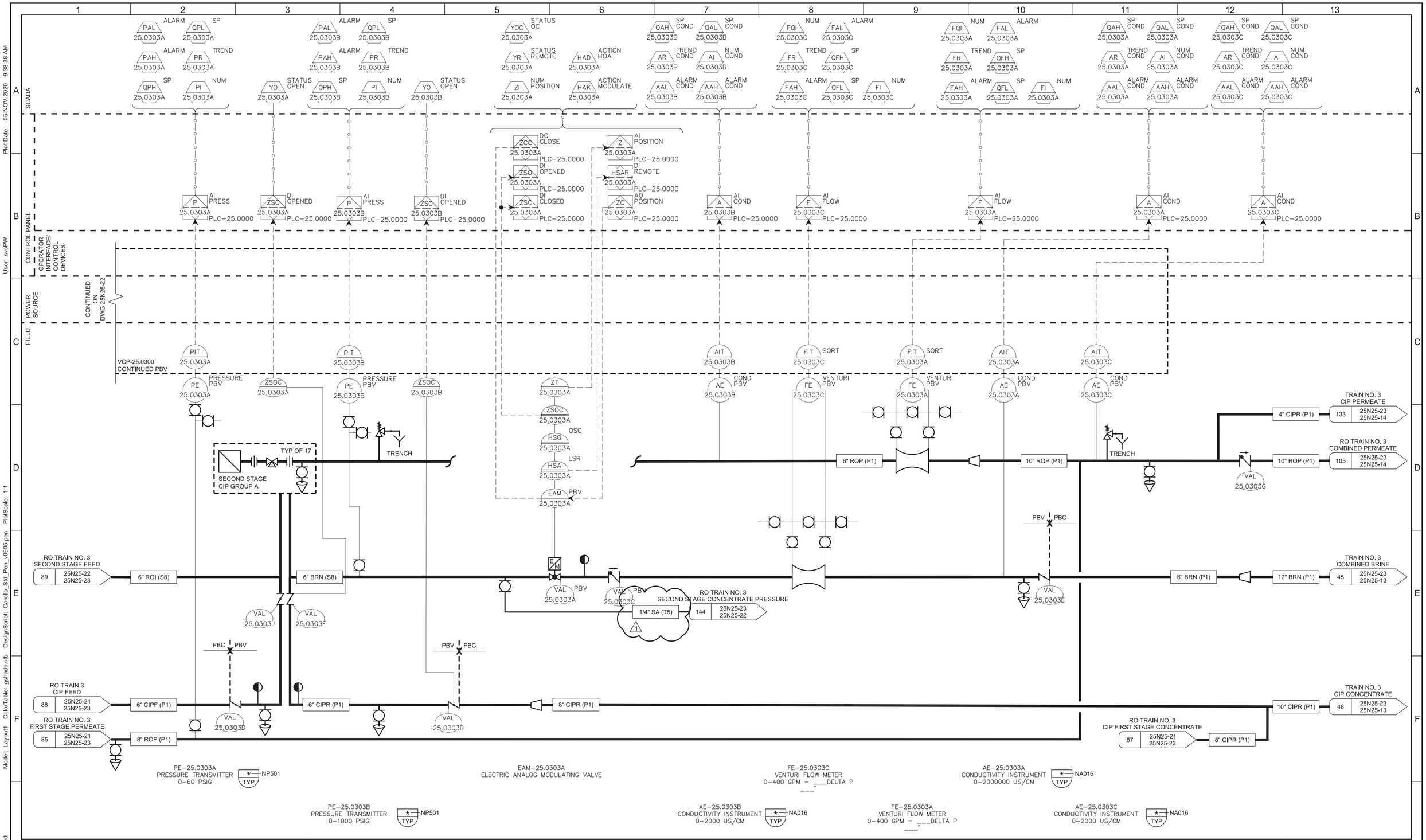

REV	DATE	BY	DESCRIPTION
1	11-04-20	MMB	REVISED PER ADDENDUM NO. 3

DESIGNED AWK
DRAWN SGS
CHECKED KMP
DATE SEPTEMBER 2020

Digitally signed by Ashritha Banapuram
Contact Info: Carollo Engineers, Inc.
Date: 2020.11.05 11:25:24-08'00'

REGISTERED PROFESSIONAL ENGINEER ASHRITHA BANAPURAM No. 21815 ELECTRICAL STATE OF CALIFORNIA

carollo

ANTIOCH CALIFORNIA OPPORTUNITY LIVES·HERE

CITY OF ANTIOCH

ANTIOCH BRACKISH WATER DESALINATION PROJECT

INSTRUMENTATION

RO TRAIN NO. 3 SECOND STAGE P&ID

VERIFY SCALES
BAR IS ONE INCH ON ORIGINAL DRAWING
0 1"
IF NOT ONE INCH ON THIS SHEET, ADJUST SCALES ACCORDINGLY

JOB NO. 10024A.10
DRAWING NO. 25N25-23
SHEET NO. 399 OF 498

PROJECT NO. 10024A10 FILE NAME: 10024A1025N2523.dwg

Plot Date: 05-NOV-2020 9:38:38 AM
User: svcPW
PlotScale: 1:1
DesignScript: Carollo_Std_Pen_v0905.pen
ColorTable: gshade.ctb
Model: Layout1
LAST SAVED BY: sshepard

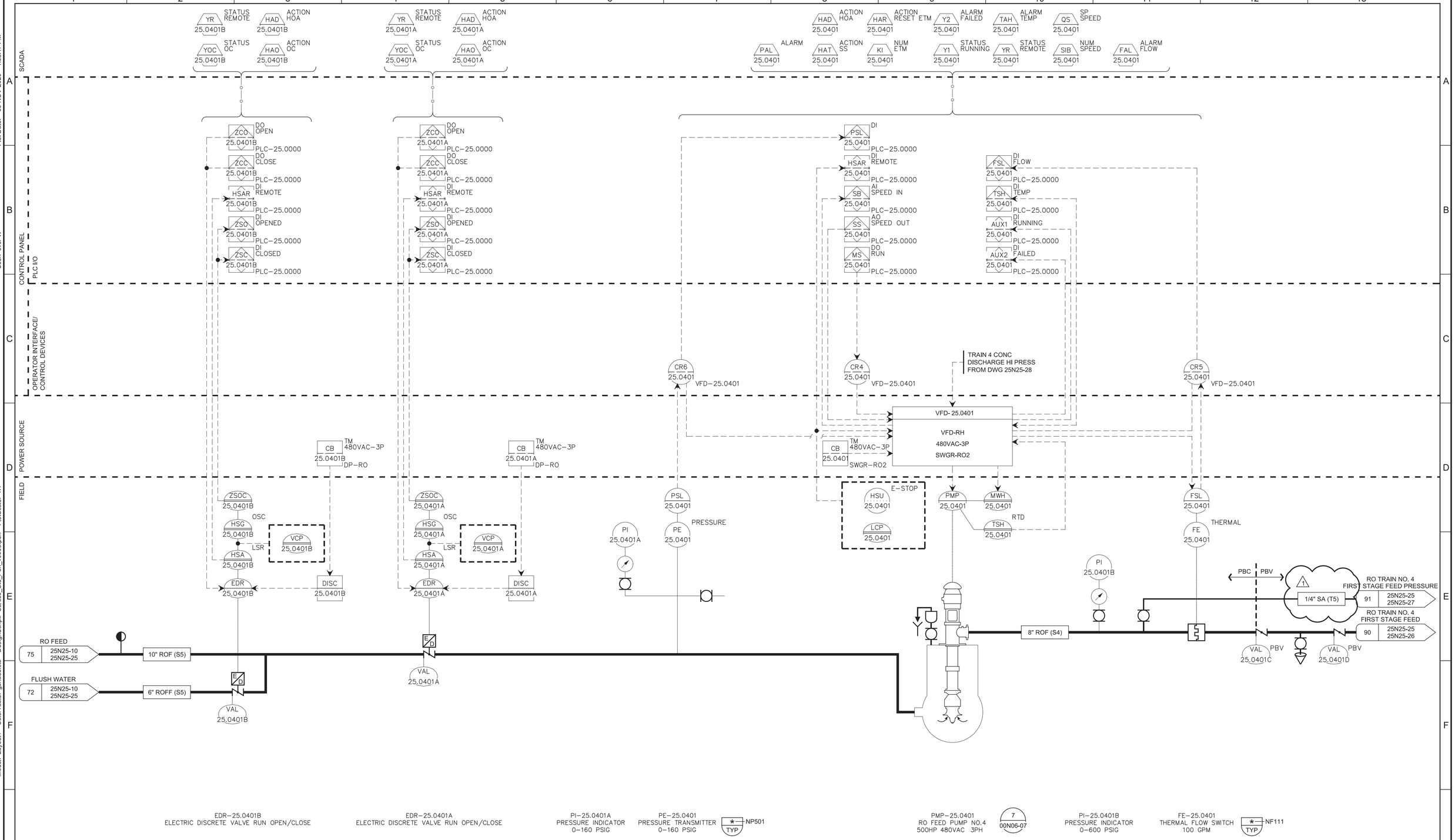

REV	DATE	BY	DESCRIPTION
1	11-04-20	MMB	REVISED PER ADDENDUM NO. 3

DESIGNED AWK
DRAWN SGS
CHECKED KMP
DATE SEPTEMBER 2020

Digitally signed by Ashritha Baraparam
Contact Info: Carollo Engineers, Inc.
Date: 2020.11.05 16:07:24-08'00'

REGISTERED PROFESSIONAL ENGINEER ASHRITHA BARAPARAM No. 21815 ELECTRICAL STATE OF CALIFORNIA

carollo

ANTIOCH CALIFORNIA OPPORTUNITY LIVES·HERE

CITY OF ANTIOCH

ANTIOCH BRACKISH WATER DESALINATION PROJECT

INSTRUMENTATION

RO TRAIN NO. 4 FEED PUMP P&ID

VERIFY SCALES
BAR IS ONE INCH ON ORIGINAL DRAWING
0 1"
IF NOT ONE INCH ON THIS SHEET, ADJUST SCALES ACCORDINGLY

JOB NO. 10024A.10
DRAWING NO. 25N25-25
SHEET NO. 400 OF 498

PROJECT NO. 10024A10 FILE NAME: 10024A1025N2525.dwg

Plot Date: 05-NOV-2020 1:58:47 PM User: svcPW PlotScale: 1:1 DesignScript: Carollo_Std_Pen_v0905.pen ColorTable: gshade.ctb Model: Layout1 LAST SAVED BY: sshepard

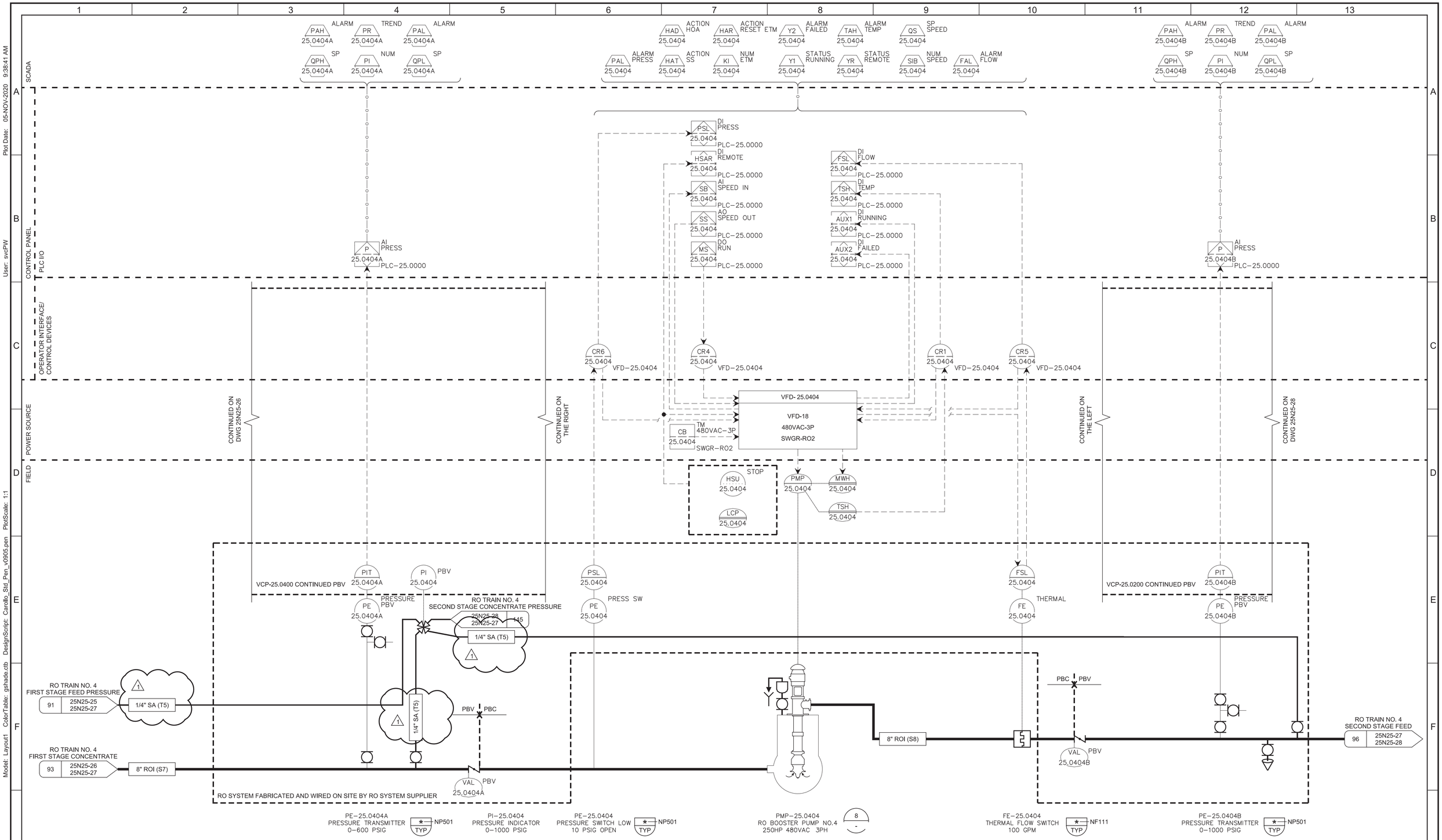

REV	DATE	BY	DESCRIPTION
1	11-04-20	MMB	REVISED PER ADDENDUM NO. 3

DESIGNED AWK
DRAWN SGS
CHECKED KMP
DATE SEPTEMBER 2020

Digitally signed by Ashritha Banapuram
Contact Info: Carollo Engineers, Inc.
Date: 2020.11.05 11:19:32-09'00'

REGISTERED PROFESSIONAL ENGINEER ASHRITHA BANAPURAM No. 21815 ELECTRICAL STATE OF CALIFORNIA

carollo

ANTIOCH CALIFORNIA OPPORTUNITY LIVES·HERE

CITY OF ANTIOCH
ANTIOCH BRACKISH WATER DESALINATION PROJECT
INSTRUMENTATION
RO TRAIN NO. 4
INTERSTAGE PUMP P&ID

VERIFY SCALES
BAR IS ONE INCH ON ORIGINAL DRAWING
0 1"
IF NOT ONE INCH ON THIS SHEET, ADJUST SCALES ACCORDINGLY

JOB NO. 10024A.10
DRAWING NO. 25N25-27
SHEET NO. 402 OF 498

PROJECT NO. 10024A10 FILE NAME: 10024A1025N2527.dwg

LAST SAVED BY: sshepard Model: Layout1 ColorTable: gshade.ctb DesignScript: Carollo_Std_Pen_v0905.pen PlotScale: 1:1 User: svcPW Plot Date: 05-NOV-2020 9:38:41 AM

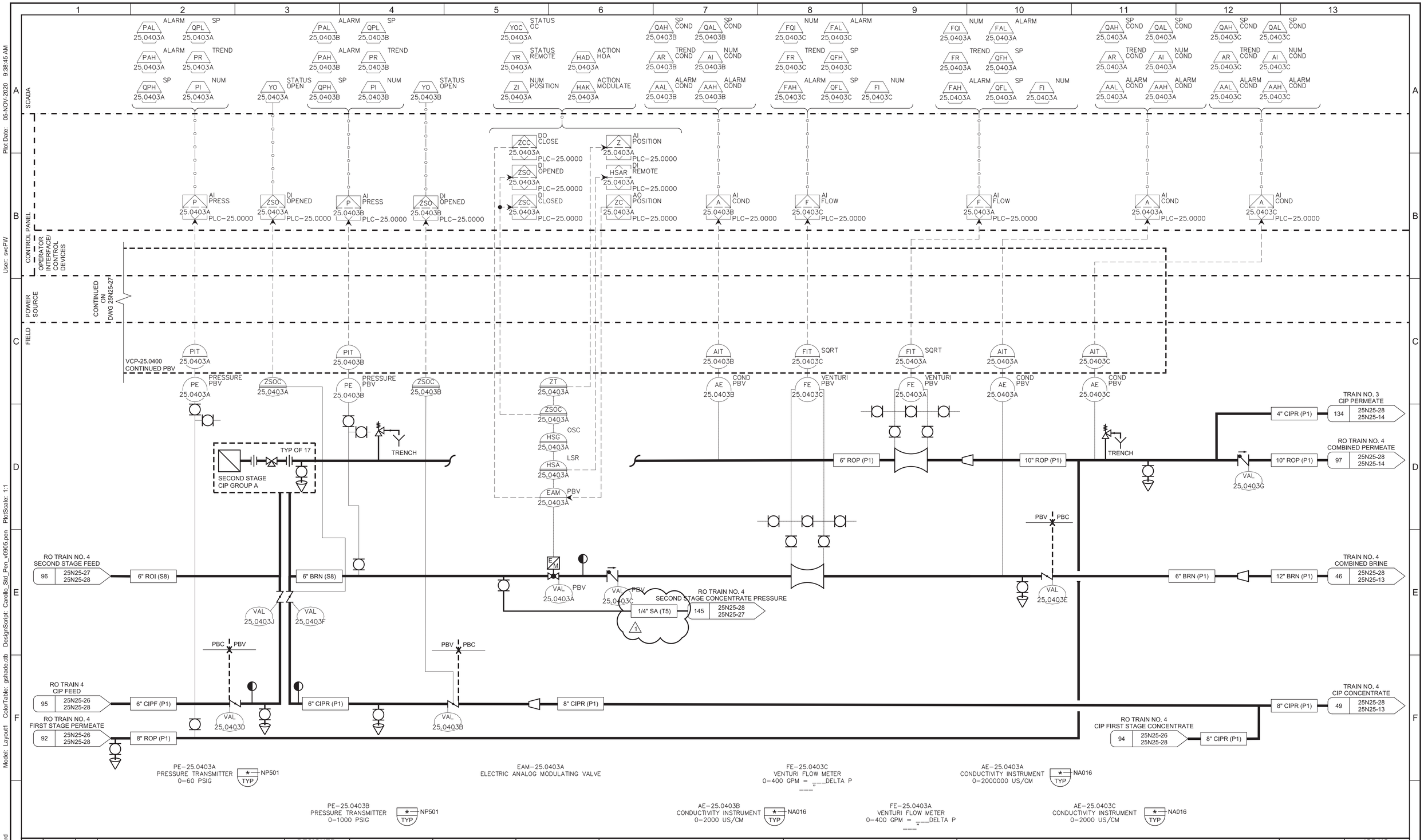

REV	DATE	BY	DESCRIPTION
1	11-04-20	MMB	REVISED PER ADDENDUM NO. 3

DESIGNED AWK
DRAWN SGS
CHECKED KMP
DATE SEPTEMBER 2020

Digitally signed by Ashwitha Banapuram
Contact Info: Carollo Engineers, Inc.
Date: 2020.11.05 11:05:34-08'00'

REGISTERED PROFESSIONAL ENGINEER ASWITHA BANAPURAM No. 21815 ELECTRICAL STATE OF CALIFORNIA

carollo

ANTIOCH CALIFORNIA OPPORTUNITY LIVES·HERE

CITY OF ANTIOCH

ANTIOCH BRACKISH WATER DESALINATION PROJECT

INSTRUMENTATION

RO TRAIN NO. 4 SECOND STAGE P&ID

VERIFY SCALES
BAR IS ONE INCH ON ORIGINAL DRAWING
0 1"
IF NOT ONE INCH ON THIS SHEET, ADJUST SCALES ACCORDINGLY

JOB NO. 10024A.10
DRAWING NO. 25N25-28
SHEET NO. 403 OF 498

PROJECT NO. 10024A10 FILE NAME: 10024A1025N2528.dwg

Plot Date: 05-NOV-2020 9:38:45 AM
User: svcPW
PlotScale: 1:1
DesignScript: Carollo_Std_Pen_v0905.pen
ColorTable: gshade.ctb
Model: Layout1
LAST SAVED BY: sshepard

Plot Date: 05-NOV-2020 9:38:15 AM
User: svcPW
PlotScale: 1:1
DesignScript: Carollo_Std_Pen_v0905.pen
ColorTable: gshade.ctb
Model: Layout1
LAST SAVED BY: sshepard

SCADA

CONTROL PANEL
PLC I/O

OPERATOR INTERFACE/
CONTROL DEVICES

POWER
SOURCE

FIELD

KEY NOTES:

1. INJECTION QUILL ASSEMBLY WITH CHECK VALVE AND CORPORATION STOP.

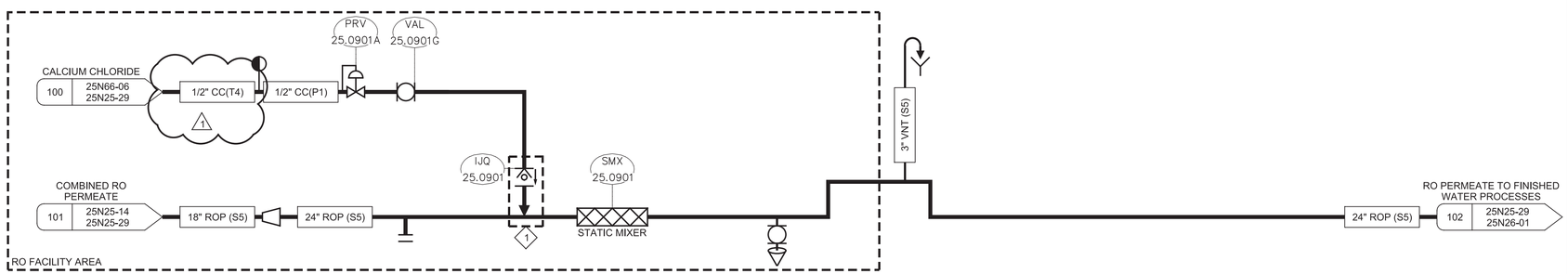

REV	DATE	BY	DESCRIPTION
1	11-04-20	MMB	REVISED PER ADDENDUM NO. 3

DESIGNED AWK
DRAWN SGS
CHECKED KMP
DATE SEPTEMBER 2020

Digitally signed by Ashritha Banapuram
Contact Info: Carollo Engineers, Inc.
Date: 2020.11.05 11:26:24-08'00'

REGISTERED PROFESSIONAL ENGINEER
ASHRITHA BANAPURAM
No. 21815
ELECTRICAL
STATE OF CALIFORNIA

carollo

ANTIOCH CALIFORNIA
OPPORTUNITY LIVES·HERE

CITY OF ANTIOCH

ANTIOCH BRACKISH WATER DESALINATION PROJECT

INSTRUMENTATION

COMBINED RO PERMEATE P&ID

VERIFY SCALES
BAR IS ONE INCH ON ORIGINAL DRAWING
0 1"
IF NOT ONE INCH ON THIS SHEET, ADJUST SCALES ACCORDINGLY

JOB NO. 10024A.10
DRAWING NO. 25N25-29
SHEET NO. 404 OF 498

PROJECT NO. 10024A10 FILE NAME: 10024A1025N2529.dwg

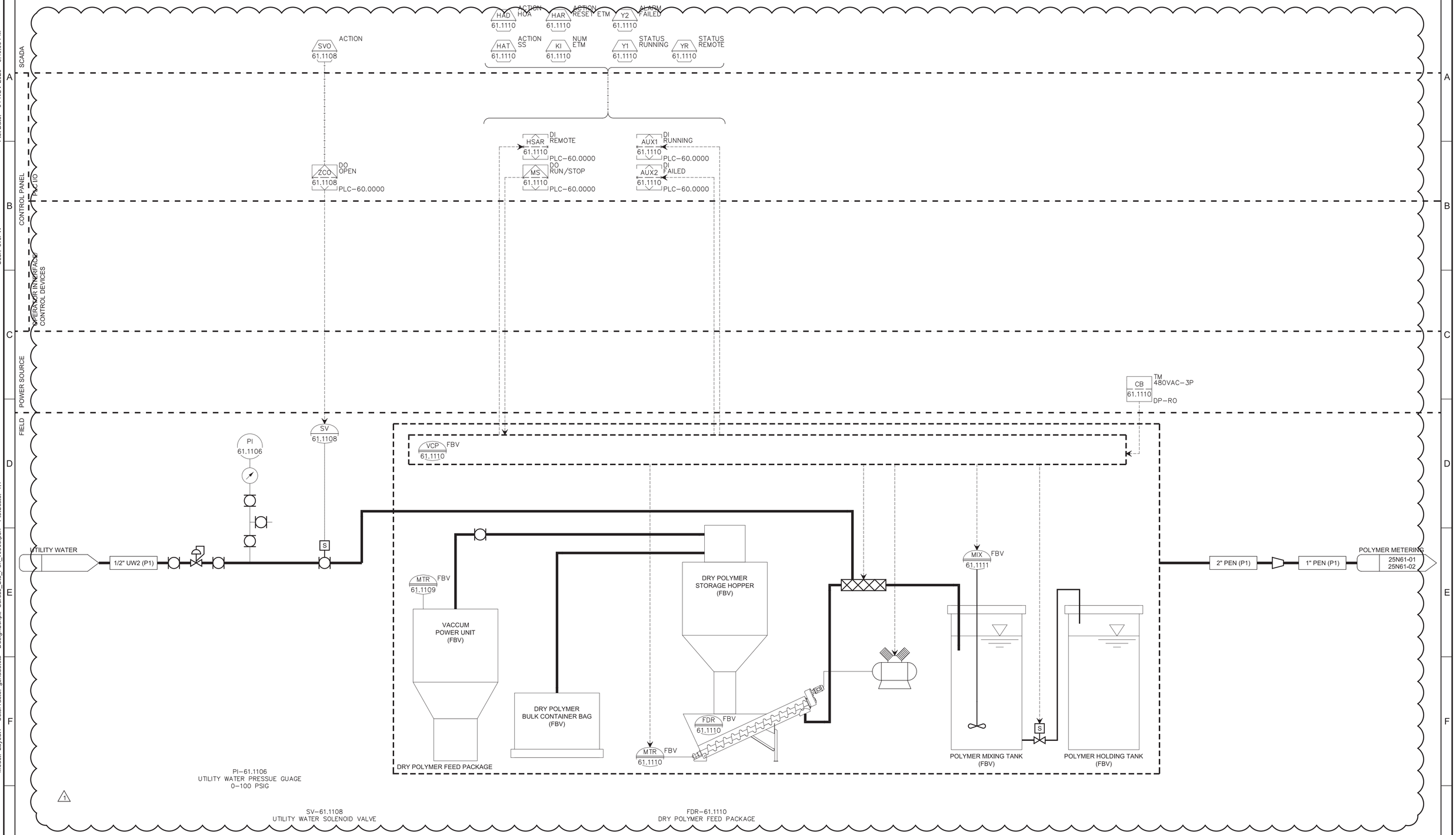

REV	DATE	BY	DESCRIPTION
1	11-04-20	MMB	REVISED PER ADDENDUM NO. 3

DESIGNED AWK
DRAWN LM
CHECKED KMP
DATE SEPTEMBER 2020

Digitally signed by Ashritha Banapuram
Contact Info: Carollo Engineers, Inc.
Date: 2020.11.05 11:19:14-0700

REGISTERED PROFESSIONAL ENGINEER ASHRITHA BANAPURAM No. 21815 ELECTRICAL STATE OF CALIFORNIA

carollo

ANTIOCH CALIFORNIA OPPORTUNITY LIVES·HERE

CITY OF ANTIOCH

ANTIOCH BRACKISH WATER DESALINATION PROJECT

INSTRUMENTATION

POLYMER STORAGE AND FEED P&ID - 1

VERIFY SCALES
BAR IS ONE INCH ON ORIGINAL DRAWING
0 1"
IF NOT ONE INCH ON THIS SHEET, ADJUST SCALES ACCORDINGLY

JOB NO. 10024A.10
DRAWING NO. 25N61-01
SHEET NO. 420A OF 498

PROJECT NO. 10024A10 FILE NAME: 10024A1025N6101.dwg

Plot Date: 04-NOV-2020 6:40:09 PM
User: svcPW
Model: Layout1 ColorTable: gshade.ctb DesignScript: Carollo_Std_Pen_v0905.pen PlotScale: 1:1
LAST SAVED BY: sshepard

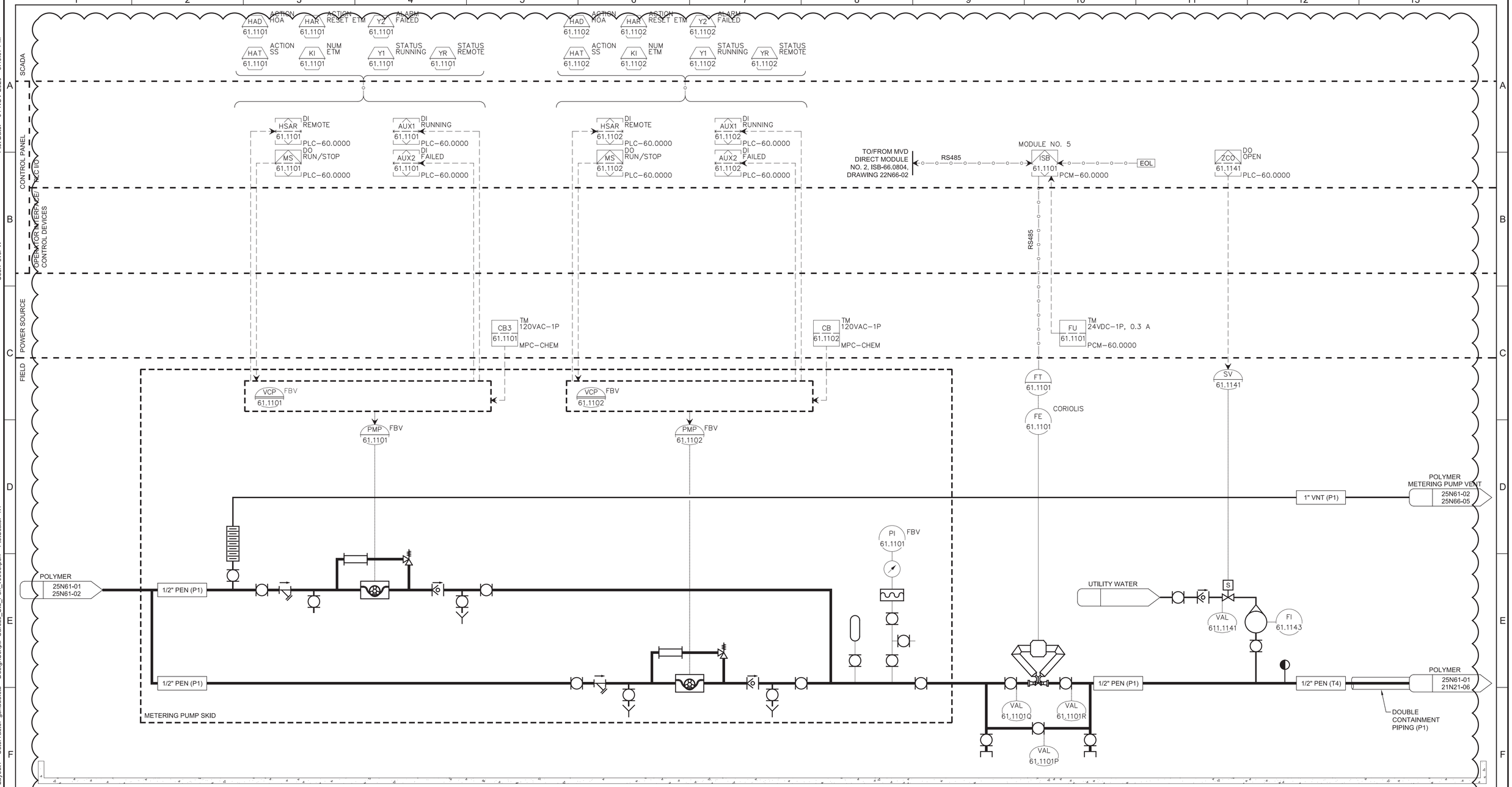

REV	DATE	BY	DESCRIPTION
1	11-04-20	MMB	REVISED PER ADDENDUM NO. 3

DESIGNED AWK
DRAWN LM
CHECKED KMP
DATE SEPTEMBER 2020

Digitally signed by Ashritha Banapuram
Contact Info: Carollo Engineers, Inc.
Date: 2020.11.05 11:23:15-08'00'

REGISTERED PROFESSIONAL ENGINEER ASHRITHA BANAPURAM No. 21815 ELECTRICAL STATE OF CALIFORNIA

carollo

ANTIOCH CALIFORNIA OPPORTUNITY LIVES·HERE

CITY OF ANTIOCH

ANTIOCH BRACKISH WATER DESALINATION PROJECT

INSTRUMENTATION

POLYMER METERING P&ID - 2

VERIFY SCALES
BAR IS ONE INCH ON ORIGINAL DRAWING
0 1"
IF NOT ONE INCH ON THIS SHEET, ADJUST SCALES ACCORDINGLY

JOB NO. 10024A.10
DRAWING NO. 25N61-02
SHEET NO. 420B OF 498

PROJECT NO. 10024A10 FILE NAME: 10024A1025N6102.dwg

Plot Date: 04-NOV-2020 6:40:07 PM User: svcPW PlotScale: 1:1 DesignScript: Carollo_Std_Pen_v0905.pen ColorTable: gshade.ctb Model: Layout1 LAST SAVED BY: sshepard

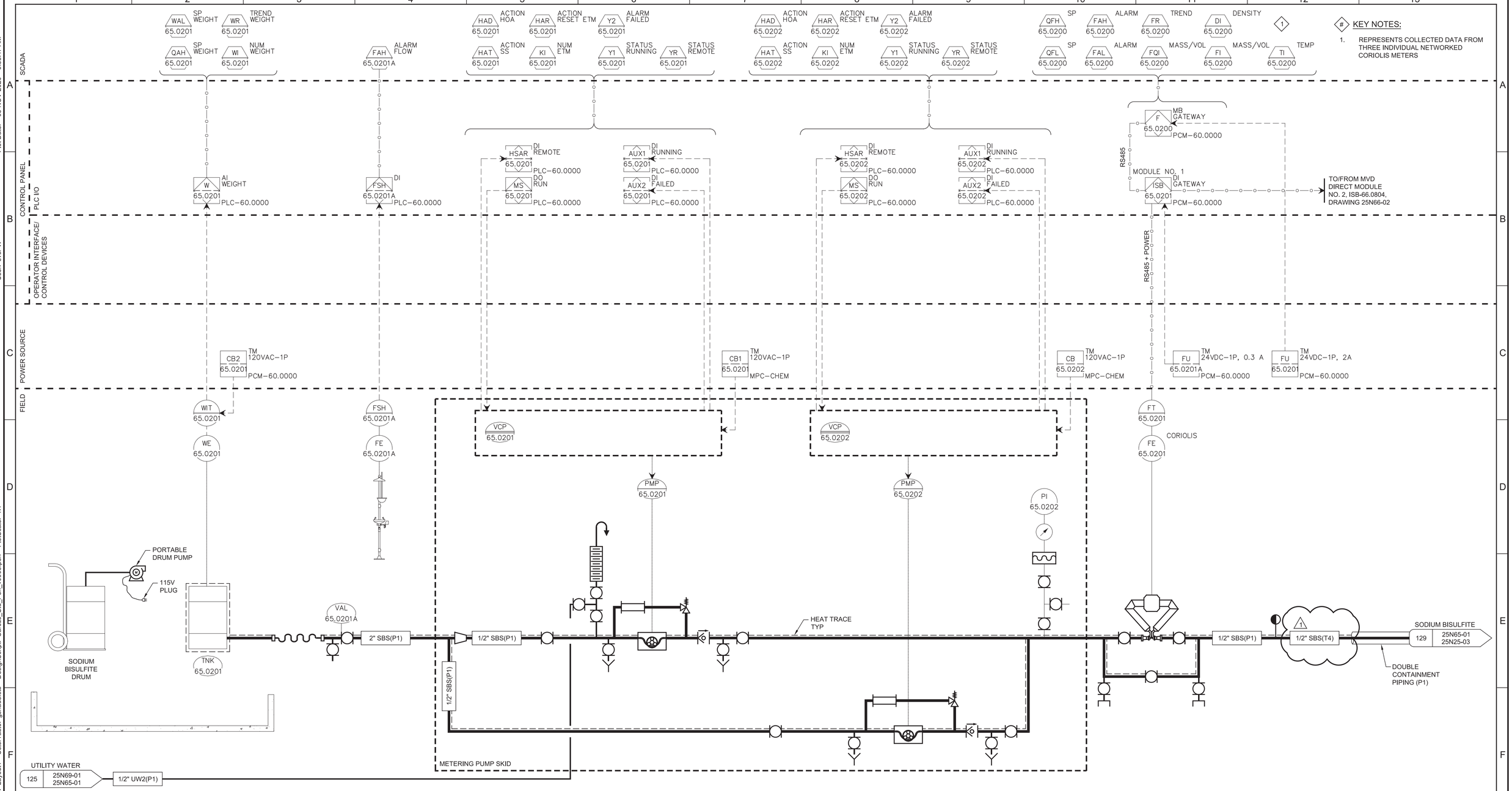

REV	DATE	BY	DESCRIPTION
1	11-04-20	MMB	REVISED PER ADDENDUM NO. 3

DESIGNED AWK
DRAWN SGS
CHECKED KMP
DATE SEPTEMBER 2020

Digitally signed by Ashritha Banapuram
Contact Info: Carollo Engineers, Inc.
Date: 2020.11.05 11:23:34-08'00'

REGISTERED PROFESSIONAL ENGINEER ASHRITHA BANAPURAM No. 21815 ELECTRICAL STATE OF CALIFORNIA

carollo

ANTIOCH CALIFORNIA OPPORTUNITY LIVES·HERE

CITY OF ANTIOCH

ANTIOCH BRACKISH WATER DESALINATION PROJECT

INSTRUMENTATION

SODIUM BISULFITE STORAGE AND METERING P&ID

VERIFY SCALES
BAR IS ONE INCH ON ORIGINAL DRAWING
0 1"
IF NOT ONE INCH ON THIS SHEET, ADJUST SCALES ACCORDINGLY

JOB NO. 10024A.10
DRAWING NO. 25N65-01
SHEET NO. 421 OF 498

PROJECT NO. 10024A10 FILE NAME: 10024A1025N6501.dwg

Plot Date: 05-NOV-2020 9:38:47 AM
User: svcPW
PlotScale: 1:1
DesignScript: Carollo_Std_Pen_v0905.pen
ColorTable: gshade.ctb
Model: Layout1
LAST SAVED BY: sshepard

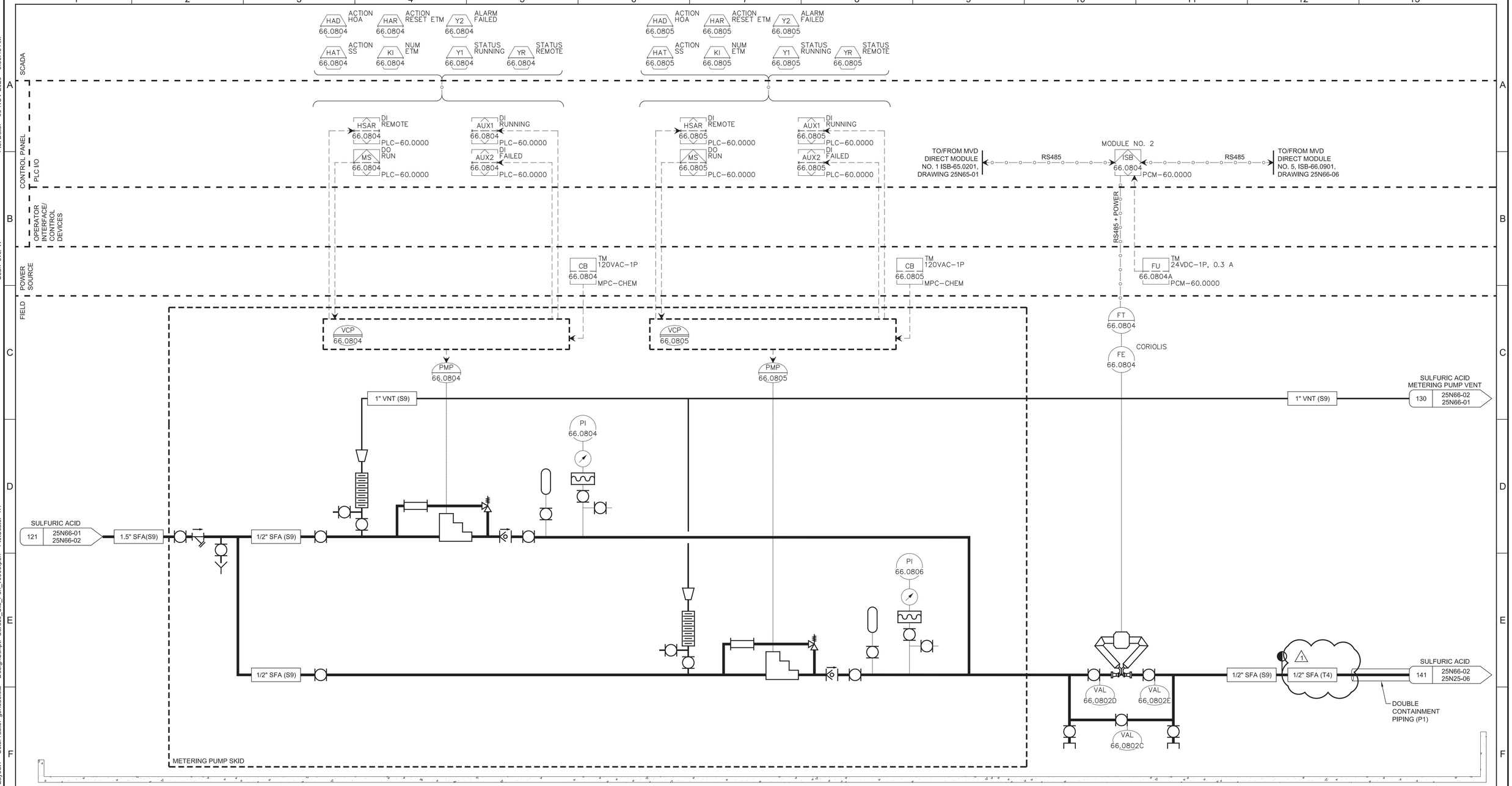

PMP-66.0804
SULFURIC ACID METERING PUMP NO. 4
0.25HP 120VAC 1PH

PMP-66.0805
SULFURIC ACID METERING PUMP NO. 5
0.25HP 120VAC 1PH

FE-66.0804
H2SO4 METERING PUMPS DISCHARGE FLOW TRANSMITTER
0.05-5.21 GPH

PI-66.0804
H2SO4 METERING PUMPS DISCHARGE PRESSURE GAGE
0-100 PSIG

PI-66.0806
H2SO4 METERING PUMPS DISCHARGE PRESSURE GAGE
0-100 PSIG

REV	DATE	BY	DESCRIPTION
1	11-04-20	MMB	REVISED PER ADDENDUM NO. 3

DESIGNED AWK
DRAWN SGS
CHECKED KMP
DATE SEPTEMBER 2020

Digitally signed by Ashritha Banapuram
Contact Info: Carollo Engineers, Inc.
Date: 2020.11.05 11:22:45-08'00'

REGISTERED PROFESSIONAL ENGINEER ASHRITHA BANAPURAM No. 21815 ELECTRICAL STATE OF CALIFORNIA

carollo

ANTIOCH CALIFORNIA OPPORTUNITY LIVES·HERE

CITY OF ANTIOCH
ANTIOCH BRACKISH WATER DESALINATION PROJECT
INSTRUMENTATION
SULFURIC ACID STORAGE AND METERING P&ID - 2

VERIFY SCALES
BAR IS ONE INCH ON ORIGINAL DRAWING
0 1"
IF NOT ONE INCH ON THIS SHEET, ADJUST SCALES ACCORDINGLY

JOB NO. 10024A.10
DRAWING NO. 25N66-02
SHEET NO. 423 OF 498

PROJECT NO. 10024A10 FILE NAME: 10024A1025N6602.dwg

Plot Date: 05-NOV-2020 9:38:48 AM
User: svcPW
PlotScale: 1:1
DesignScript: Carollo_Std_Pen_v0905.pen
ColorTable: gshade.ctb
Model: Layout1
LAST SAVED BY: sshepard

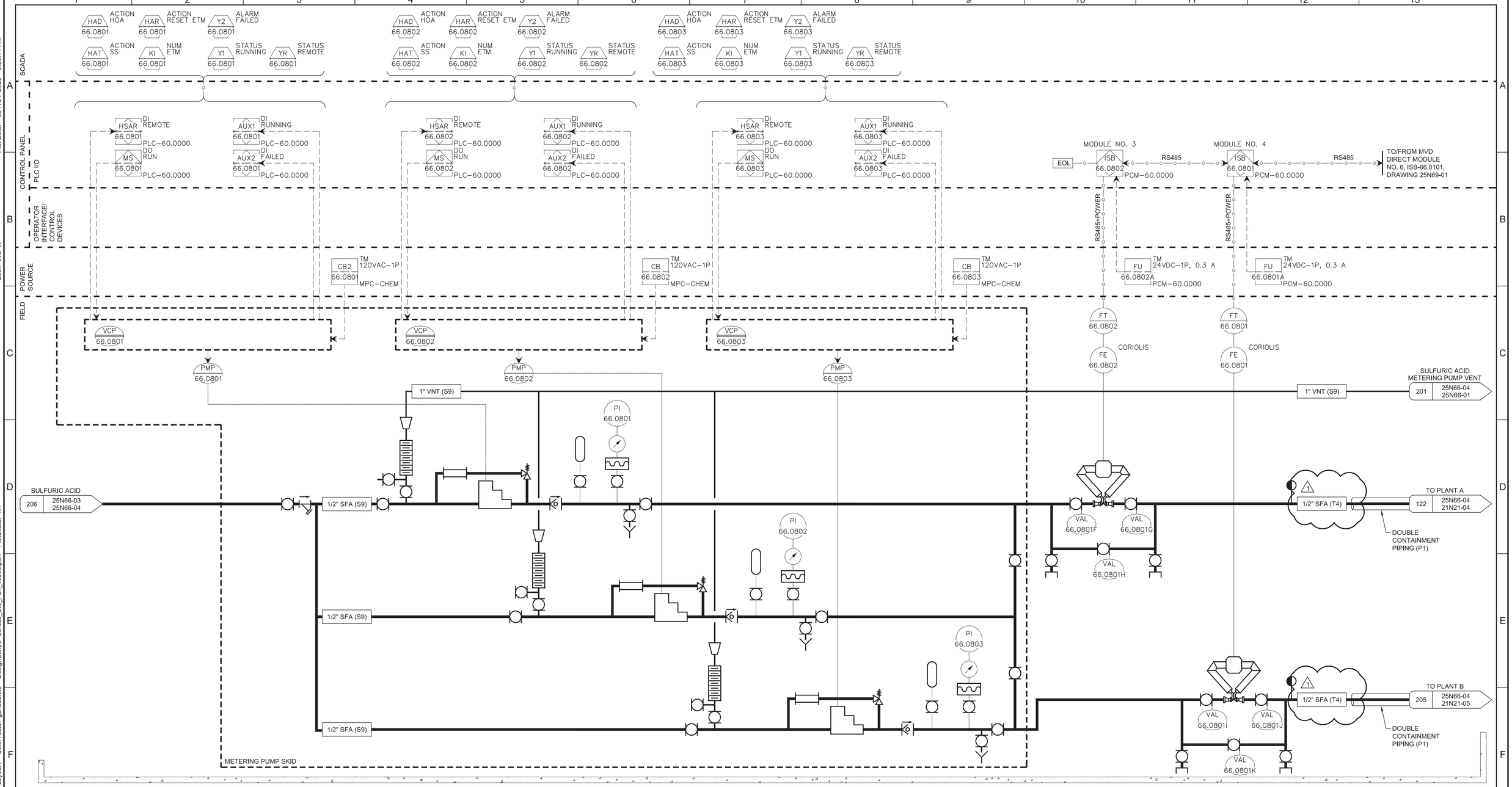

PMP-66.0801
SULFURIC ACID METERING PUMP NO.1
0.25HP 120VAC 1PH

PMP-66.0802
SULFURIC ACID METERING PUMP NO.2
0.25HP 120VAC 1PH

PMP-66.0803
SULFURIC ACID METERING PUMP NO.3
0.25HP 120VAC 1PH

FE-66.0802
H2SO4 METERING PUMPS DISCHARGE FLOW TRANSMITTER
0.05-5.21 GPH
___

PI-66.0801
H2SO4 METERING PUMPS DISCHARGE PRESSURE GAGE NO. 1
0-100 PSIG

PI-66.0802
H2SO4 METERING PUMPS DISCHARGE PRESSURE GAGE NO. 2
0-100 PSIG

PI-66.0803
H2SO4 METERING PUMPS DISCHARGE PRESSURE GAGE NO. 3
0-___ PSIG

FE-66.0801
H2SO4 METERING PUMPS DISCHARGE FLOW TRANSMITTER
0.05-5.21 GPH
___

REV	DATE	BY	DESCRIPTION
1	11-04-20	MMB	REVISED PER ADDENDUM NO. 3

DESIGNED AWK
DRAWN SGS
CHECKED KMP
DATE SEPTEMBER 2020

Digitally signed by Ashritha Banapuram
Contact Info: Carollo Engineers, Inc.
Date: 2020.11.05 11:22:28-0800

REGISTERED PROFESSIONAL ENGINEER ASHRITHA BANAPURAM No. 21815 ELECTRICAL STATE OF CALIFORNIA

carollo

ANTIOCH CALIFORNIA OPPORTUNITY LIVES·HERE

CITY OF ANTIOCH
ANTIOCH BRACKISH WATER DESALINATION PROJECT
INSTRUMENTATION
SULFURIC ACID STORAGE AND METERING P&ID - 4

VERIFY SCALES
BAR IS ONE INCH ON ORIGINAL DRAWING
0 1"
IF NOT ONE INCH ON THIS SHEET, ADJUST SCALES ACCORDINGLY

JOB NO. 10024A.10
DRAWING NO. 25N66-04
SHEET NO. 425 OF 498

PROJECT NO. 10024A10 FILE NAME: 10024A1025N6604.dwg

Plot Date: 05-NOV-2020 9:38:14 AM User: svcPW PlotScale: 1:1 DesignScript: Carollo_Std_Pen_v0905.pen ColorTable: gshade.ctb Model: Layout1 LAST SAVED BY: sshepard

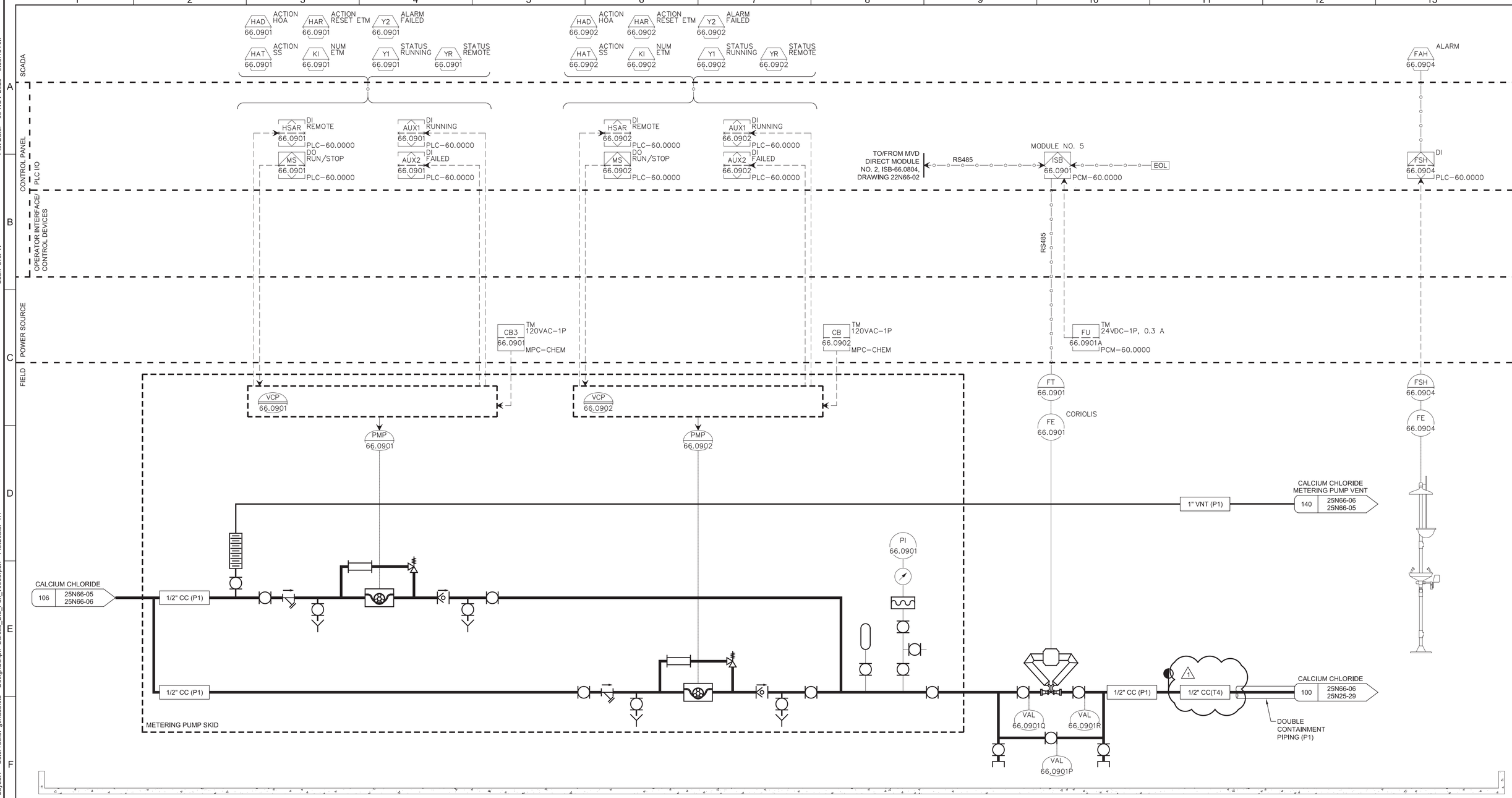

PMP-66.0901
CALCIUM CHLORIDE METERING PUMP NO.1
0.25HP 120VAC 1PH

PMP-66.0902
CALCIUM CHLORIDE METERING PUMP NO.2
0.25HP 120VAC 1PH

FE-66.0901
CACL2 METERING PUMPS DISCHARGE FLOW TRANSMITTER
3.3-24.2 GPH
N/A TYP

PI-66.0901
CACL2 METERING PUMPS DISCHARGE PRESSURE GAGE NO. 1
0-100 PSIG

FE-66.0904
CaCl2 EMERGENCY SHOWER & EYEWASH FLOW SWITCH
1 GPM

REV	DATE	BY	DESCRIPTION
1	11-04-20	MMB	REVISED PER ADDENDUM NO. 3

DESIGNED AWK
DRAWN SGS
CHECKED KMP
DATE SEPTEMBER 2020

Digitally signed by Ashritha Baraparam
Contact Info: Carollo Engineers, Inc.
Date: 2020.11.05 11:22:15-08'00'

REGISTERED PROFESSIONAL ENGINEER ASHRITHA BARAPARAM No. 21815 ELECTRICAL STATE OF CALIFORNIA

carollo

ANTIOCH CALIFORNIA OPPORTUNITY LIVES·HERE

CITY OF ANTIOCH
ANTIOCH BRACKISH WATER DESALINATION PROJECT
INSTRUMENTATION
CALCIUM CHLORIDE METERING AND STORAGE P&ID - 2

VERIFY SCALES
BAR IS ONE INCH ON ORIGINAL DRAWING
0 1"
IF NOT ONE INCH ON THIS SHEET, ADJUST SCALES ACCORDINGLY

JOB NO. 10024A.10
DRAWING NO. 25N66-06
SHEET NO. 427 OF 498

PROJECT NO. 10024A10 FILE NAME: 10024A1025N6606.dwg

Plot Date: 05-NOV-2020 9:38:18 AM
User: svcPW
Model: Layout1 ColorTable: gshade.ctb DesignScript: Carollo_Std_Pen_v0905.pen PlotScale: 1:1
LAST SAVED BY: sshepard

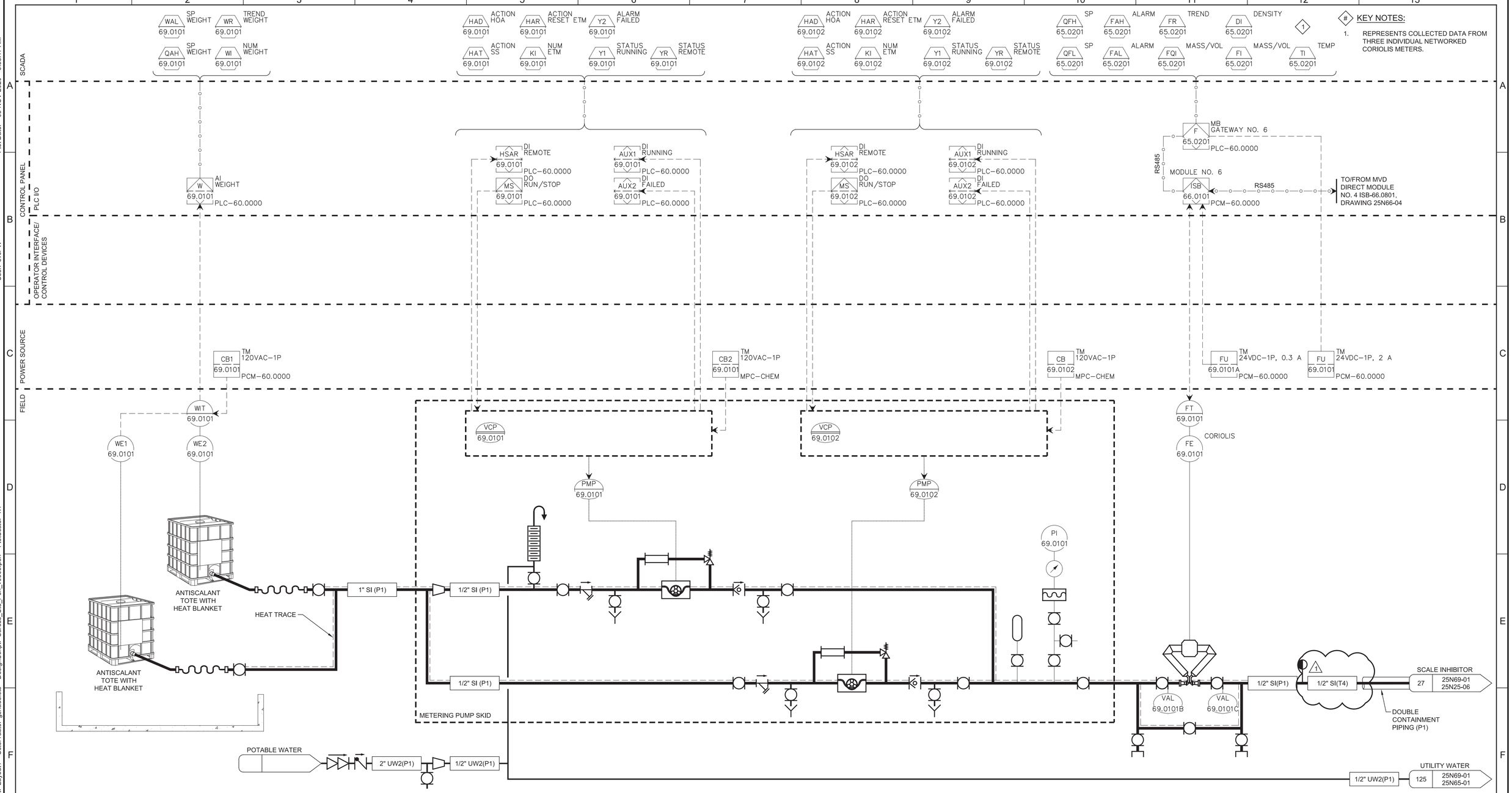

REV	DATE	BY	DESCRIPTION
1	11-04-20	MMB	REVISED PER ADDENDUM NO. 3

DESIGNED AWK
DRAWN SGS
CHECKED KMP
DATE SEPTEMBER 2020

Digitally signed by Ashritha Banapuram
Contact Info: Carollo Engineers, Inc.
Date: 2020.11.05 11:23:44-08'00'

REGISTERED PROFESSIONAL ENGINEER ASHRITHA BANAPURAM No. 21815 ELECTRICAL STATE OF CALIFORNIA

carollo

ANTIOCH CALIFORNIA OPPORTUNITY LIVES·HERE

CITY OF ANTIOCH

ANTIOCH BRACKISH WATER DESALINATION PROJECT

INSTRUMENTATION

ANTISCALANT STORAGE AND METERING P&ID

VERIFY SCALES
BAR IS ONE INCH ON ORIGINAL DRAWING
0 1"
IF NOT ONE INCH ON THIS SHEET, ADJUST SCALES ACCORDINGLY

JOB NO. 10024A.10
DRAWING NO. 25N69-01
SHEET NO. 428 OF 498

PROJECT NO. 10024A10 FILE NAME: 10024A1025N6901.dwg

Plot Date: 05-NOV-2020 9:38:17 AM
User: svcPW
DesignScript: Carollo_Std_Pen_v0905.pen PlotScale: 1:1
ColorTable: gshade.ctb
Model: Layout1
LAST SAVED BY: sshepard

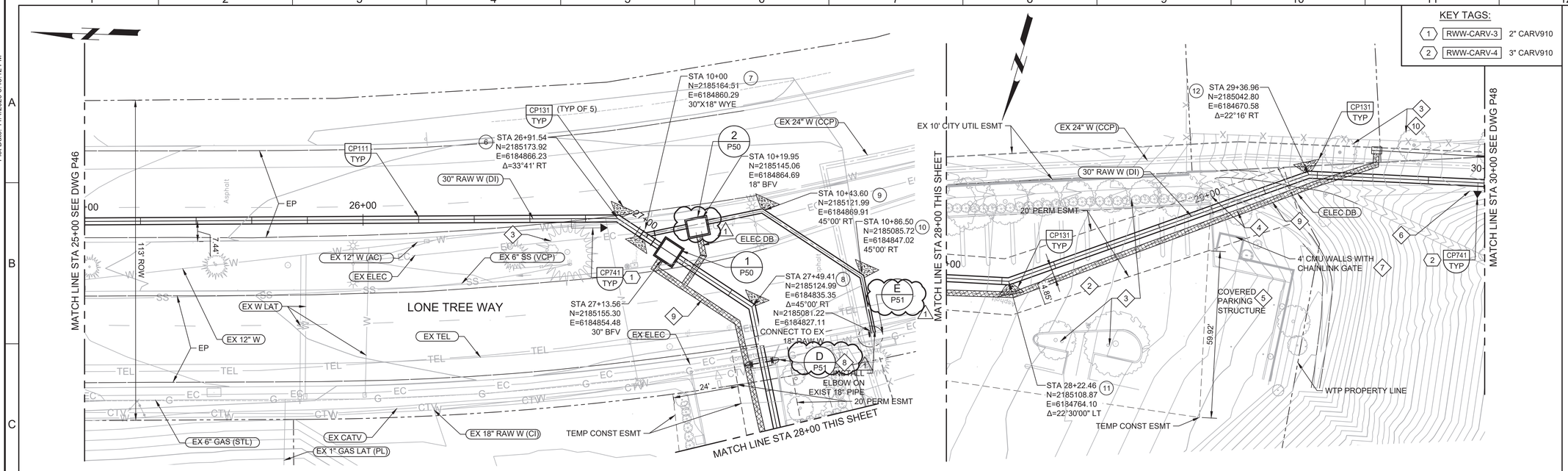

PLAN

SCALE: 1"=20'
FILE: Proj_Num_01C101

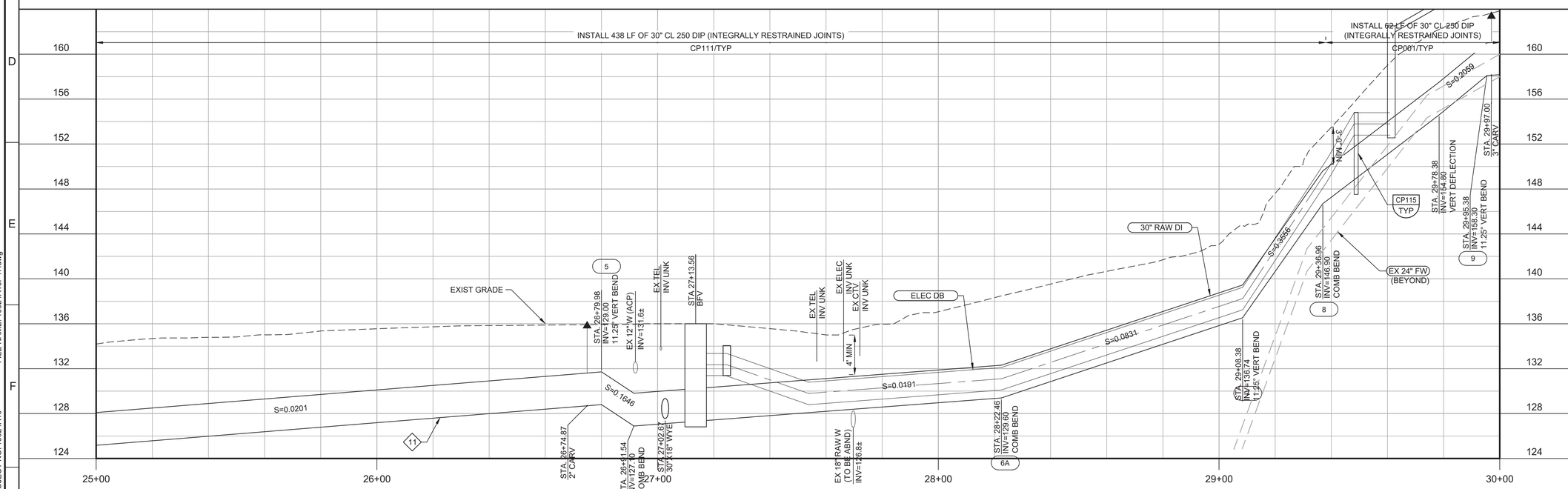

PROFILE

HORIZ SCALE: 1"=20'
VERT SCALE: 1"=5'
FILE: Proj_Num_01C101

KEY TAGS:

1	RWW-CARV-3	2" CARV910
2	RWW-CARV-4	3" CARV910

GENERAL NOTES:

1. SEE DWG G05 FOR GENERAL NOTES AND PIPELINE NOTES.
2. SEE CATHODIC PROTECTION TABLE FOR CATHODIC PROTECTION REQUIREMENTS.
3. SEE SECTION 01550 FOR TRAFFIC CONTROL REQUIREMENTS.
4. WORK FROM STA 29+00 TO STA 34+00 MAY NOT OCCUR DURING INCLEMENT WEATHER TO PREVENT SOIL RUNOFF ONTO NEIGHBORING PROPERTIES.
5. ZERO DUST IS ALLOWED ON NEIGHBORING PROPERTIES.

KEY NOTES:

1. SEE SECTION 01140 FOR WORK RESTRICTIONS.
2. REPLACE IN KIND PARKING LOT AC PAVEMENT AND BASE COARSE SLURRY SEAL AND RESTRIPE ALL EXISTING PAVING WITHIN TEMPORARY AND PERMANENT EASEMENTS REMOVED OR DAMAGED BY CONSTRUCTION.
3. PROTECT IN PLACE TREES. TRIM TREES IN ADVANCE OF CONSTRUCTION TO A MINIMUM OF 14' ABOVE ROAD USING CERTIFIED ARBORIST.
4. REMOVE TREES AND STUMP AS REQUIRED FOR CONSTRUCTION.
5. PROTECT IN PLACE EXISTING PARKING STRUCTURE.
6. REPLACE EX 3' WIDE CONC V-DITCH WITH SHOTCRETE OR PRECAST J-DITCH PER CP001/TYP FROM STA 29+38 TO STA 31+70.
7. PROTECT IN PLACE CMU WALLS AND CHAINLINK GATE DAMAGED OR REMOVED BY CONSTRUCTION.
8. FILL APPROX 1735 LF OF EX 18" RAW W LINE AND 15 LF OF 30 RAW W LINE TO ABANDONED IN PLACE WITH CLSM FROM APPROX STA 10+00 TO STA 27+75.
9. INSTALL DUCT BANK WITH POWER AND CONTROL 4'-6" OFFSET FROM 30" RAW WATER CL TO DB CL FROM VALVE VAULTS IN LONE TREE WAY TO STA 29+60.
10. INSTALL TEMP CHAIN LINK SECURITY FENCE AT PROPERTY LINE. EXISTING BOARD FENCING MAY NOT BE USED FOR SECURITY.
11. CONTRACTOR MAY ENCOUNTER ROCK EXCAVATION IN THIS AREA.

Call before you Dig
Avoid cutting underground utility lines. It's costly.
Call 811

KEY MAP

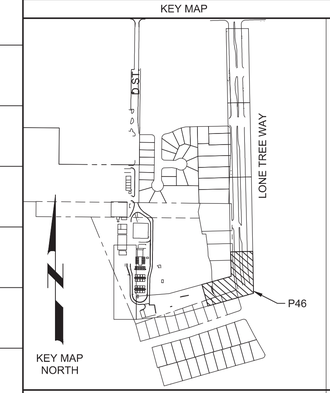

SCALE

0 10' 20' 40'
HORIZONTAL

0 2.5' 5' 10'
VERTICAL

REV	DATE	BY	DESCRIPTION
1	11-4-2020	MMB	REVISED PER ADDENDUM #3

DESIGNED JES
DRAWN ART
CHECKED JM
DATE SEPTEMBER 2020

Digitally signed by Jill E. Shankel
Contact Info: Carollo Engineers, Inc.
Date: 2020.11.04

REGISTERED PROFESSIONAL ENGINEER JILL E. SHANKEL No. 54604 CIVIL STATE OF CALIFORNIA

carollo

ANTIOCH CALIFORNIA OPPORTUNITY LIVES•HERE

CITY OF ANTIOCH
ANTIOCH BRACKISH WATER DESALINATION PROJECT
CIVIL
30" RAW WATER - PLAN AND PROFILE
STA 25+00 TO 30+00

VERIFY SCALES
BAR IS ONE INCH ON ORIGINAL DRAWING
0 1"
IF NOT ONE INCH ON THIS SHEET, ADJUST SCALES ACCORDINGLY

JOB NO. 10024A.10
DRAWING NO. P47
SHEET NO. 480 OF 498

Plot Date: 11/4/2020 6:45:12 PM
FILE NAME: 10024A10P47.dwg
PROJECT NO.10024A10
LAST SAVED BY: atucker

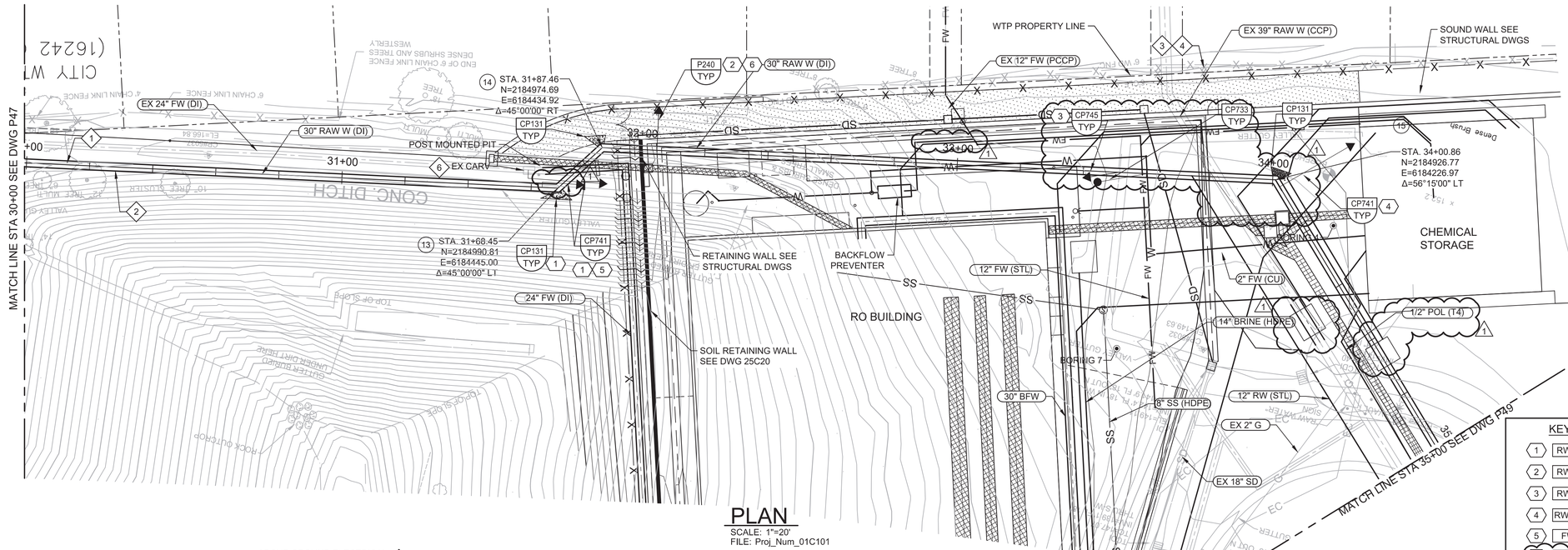

PLAN

SCALE: 1"=20'
FILE: Proj_Num_01C101

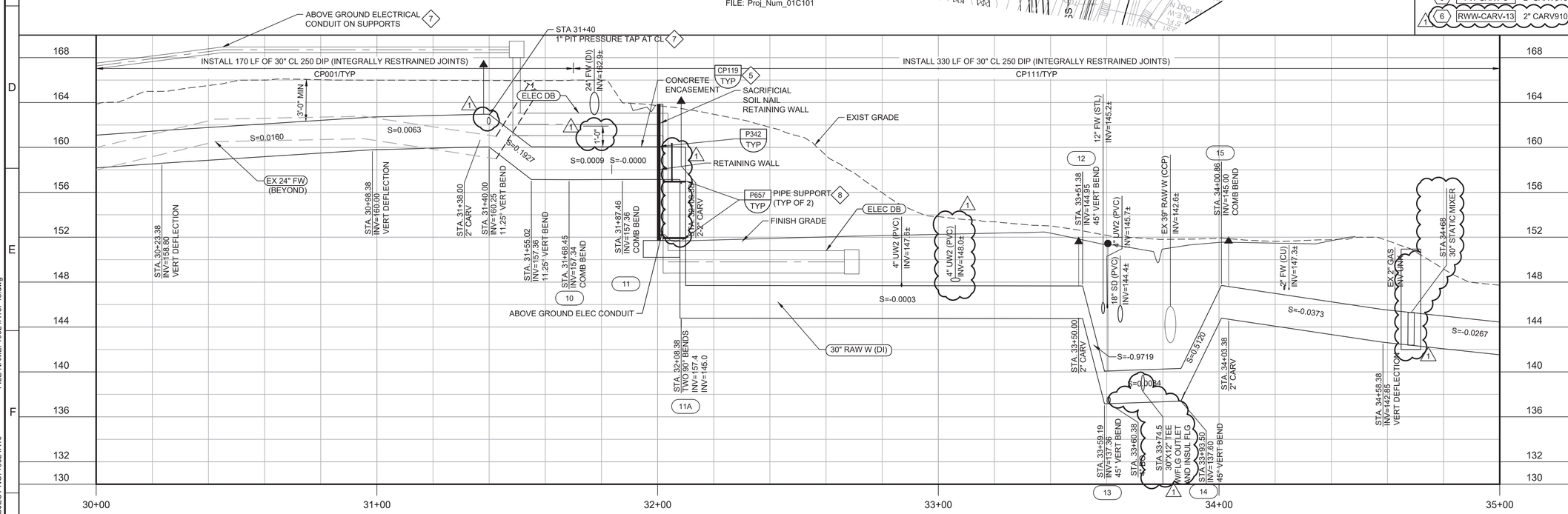

PROFILE

HORIZ SCALE: 1"=20'
VERT SCALE: 1"=5'
FILE: Proj_Num_01C101

GENERAL NOTES:

1. SEE DWG G05 FOR GENERAL NOTES AND PIPELINE NOTES.
2. SEE CATHODIC PROTECTION TABLE FOR CATHODIC PROTECTION REQUIREMENTS.
3. WORK FROM STA 29+00 TO STA 34+00 MAY NOT OCCUR DURING INCLEMENT WEATHER TO PREVENT SOIL RUNOFF ONTO NEIGHBORING PROPERTIES.
4. ZERO DUST IS ALLOWED ON NEIGHBORING PROPERTIES.

KEY NOTES:

1. REPLACE EX 3' WIDE CONC V-DITCH WITH SHOTCRETE OR PRECAST J-DITCH PER CP001/TYP FROM STA 29+38 TO STA 31+70.
2. INSTALL DUCT BANK WITH POWER AND CONTROL PER DETAIL EM001/TYP AND 4'-6" OFFSET FROM 30" RAW WATER LINE FROM RO BUILDING TO VALVE VAULTS IN LONE TREE WAY.
3. INSTALL TEMP CHAIN LINK SECURITY FENCE AT PROPERTY LINE. EXISTING BOARD FENCING MAY NOT BE USED FOR SECURITY.
4. INSTALL TEMP K-RAIL OR EQUIVALENT MEASURE DOWNHILL OF THE PIPE TRENCH TO PREVENT SOILS FROM ENTERING NEIGHBORING PROPERTIES.
5. CONCRETE ENCASE PIPE WHERE MIN COVER IS LESS THAN 3'.
6. REMOVE EX CARV VAULT. REPLACE OUTSIDE OF ROAD PER DETAIL CP741/TYP.
7. SEE ELECTRICAL DRAWINGS FOR DUCT BANK AND CONDUIT DETAILS.
8. INSTALL FLANGED 30° 90° BEND AT RETAINING WALL INSTALL PIPE FLANGES AT PIPE SUPPORTS. MAX PIPE SUPPORT SPACING IS 5'.

KEY TAGS:

1	RWW-CARV-7	2" CARV910
2	RWW-CARV-8	2" CARV910
3	RWW-CARV-9	2" CARV910
4	RWW-CARV-10	2" CARV910
5	FW-CARV-3	2" CARV910
1 6	RWW-CARV-13	2" CARV910

Call before you Dig
Avoid cutting underground utility lines. It's costly.
Call 811

KEY MAP

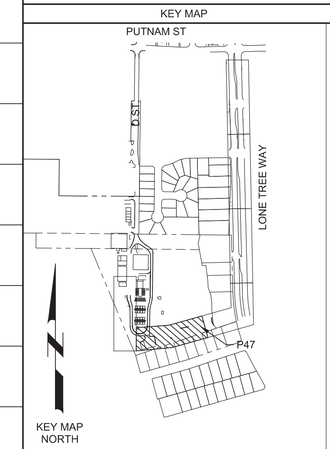

SCALE

0 10' 20' 40' HORIZONTAL
0 2.5' 5' 10' VERTICAL

REV	DATE	BY	DESCRIPTION
1	11-4-2020	MMB	REVISED PER ADDENDUM #3

DESIGNED JES
DRAWN ART
CHECKED JM
DATE SEPTEMBER 2020

Digitally signed by Jill E. Shankel
Contact Info: Carollo Engineers, Inc.
Date: 2020.11.04

REGISTERED PROFESSIONAL ENGINEER JILL E. SHANKEL No. 54604 CIVIL STATE OF CALIFORNIA

carollo

ANTIOCH CALIFORNIA OPPORTUNITY LIVES·HERE

CITY OF ANTIOCH
ANTIOCH BRACKISH WATER DESALINATION PROJECT
CIVIL
30" RAW WATER - PLAN AND PROFILE
STA 30+00 TO 35+00

VERIFY SCALES
BAR IS ONE INCH ON ORIGINAL DRAWING
0 1"
IF NOT ONE INCH ON THIS SHEET, ADJUST SCALES ACCORDINGLY

JOB NO. 10024A.10
DRAWING NO. P48
SHEET NO. 481 OF 498

Plot Date: 11/4/2020 1:37:46 PM
FILE NAME: 10024A10P48.dwg
PROJECT NO.10024A10
LAST SAVED BY: atucker

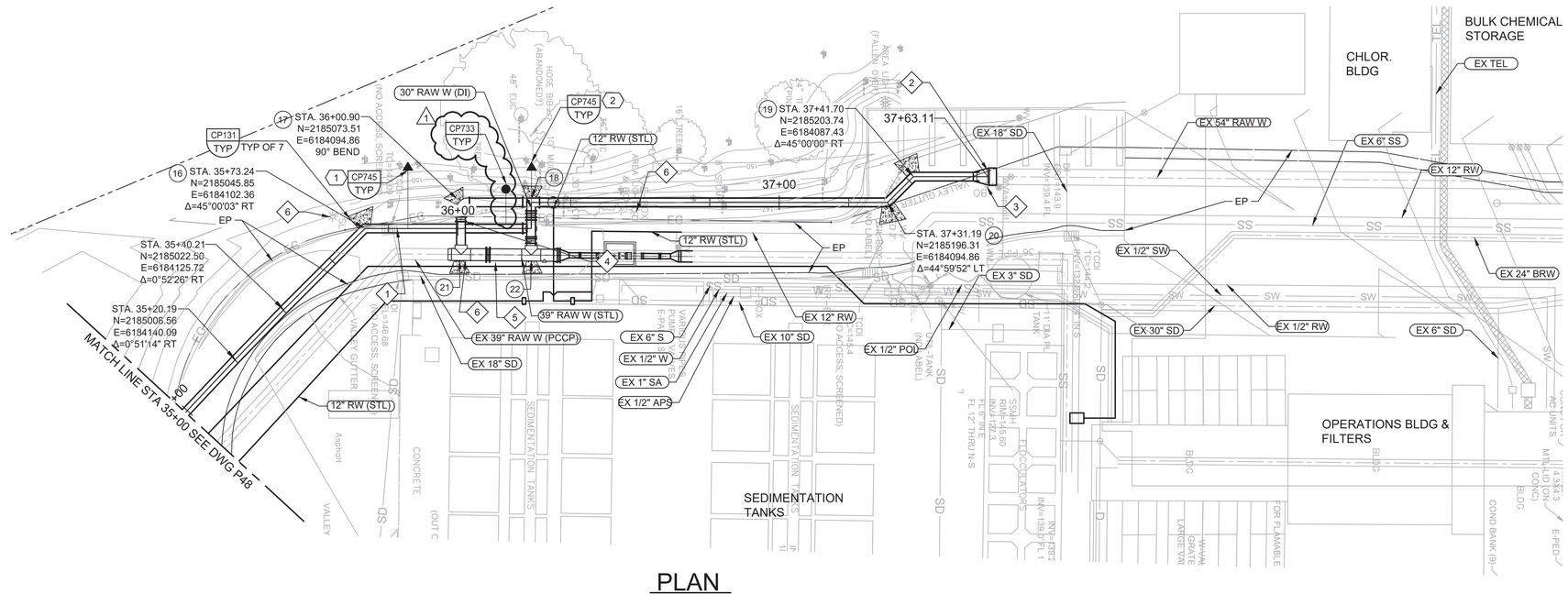

PLAN

SCALE: 1"=20'
FILE: Proj_Num_01C101

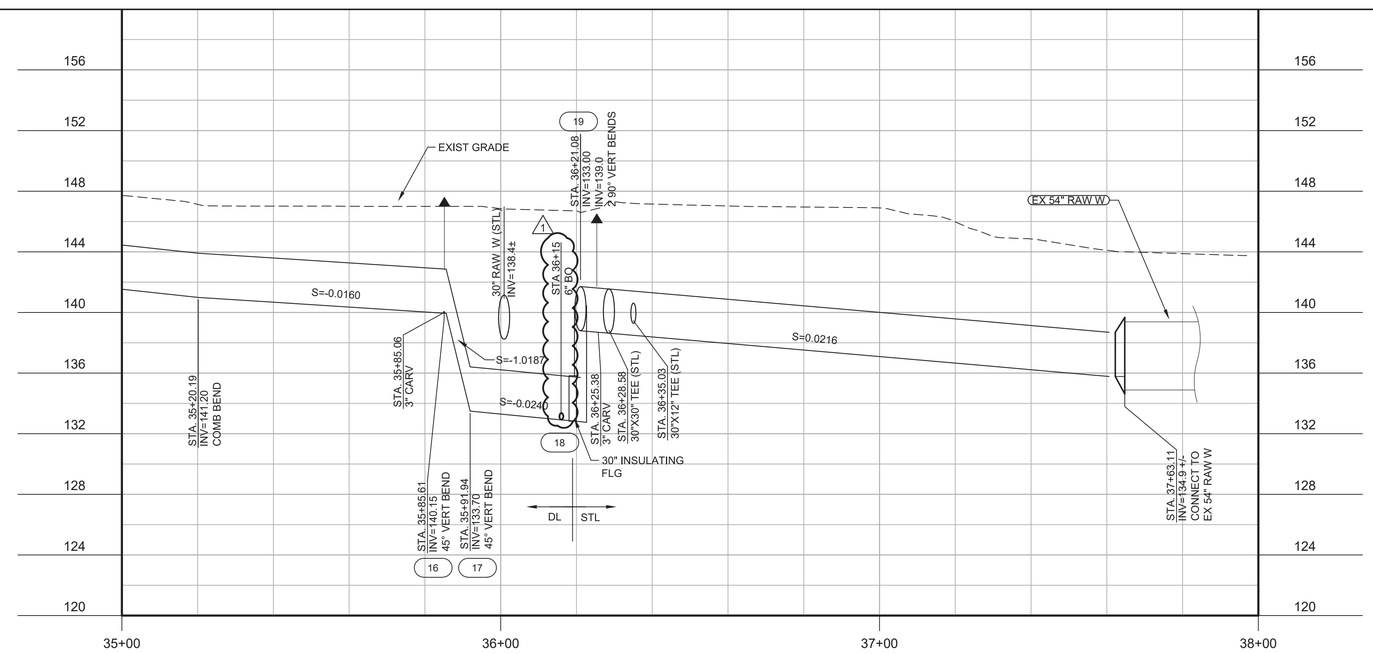

PROFILE

HORIZ SCALE: 1"=20'
VERT SCALE: 1"=5'
FILE: Proj_Num_01C101

GENERAL NOTES:

1. SEE DWG G05 FOR GENERAL NOTES AND PIPELINE NOTES.
2. SEE CATHODIC PROTECTION TABLE FOR CATHODIC PROTECTION REQUIREMENTS.

KEY NOTES:

1. REMOVE AND REPLACE IN-KIND CATCH BASIN AND 12" SD AS REQUIRED FOR CONSTRUCTION.
2. FIELD VERIFY DEPTH AND LOCATION OF EX 54" RAW W. REMOVE BLIND FLANGE AND INSTALL FLANGED 30"X54" DI REDUCER.
3. REPLACE IN-KIND BLOWOFF ON 54" RAW W IF DAMAGED BY CONSTRUCTION.
4. INSTALL 30" BFV, FIELD LOCATE AS REQUIRED FOR CONSTRUCTION.
5. SEE DWGS 25C15 AND 25C16 FOR VALVE AND FM DETAILS.
6. REMOVE AND REINSTALL STREET LIGHT, ELEC BOX, AND ELEC CONDUIT AS REQUIRED FOR CONSTRUCTION.

KEY TAGS:

1 RWW-CARV-11 3" CARV910
2 RWW-CARV-12 3" CARV910

Call before you Dig
Avoid cutting underground utility lines. It's costly.
Call 811

KEY MAP

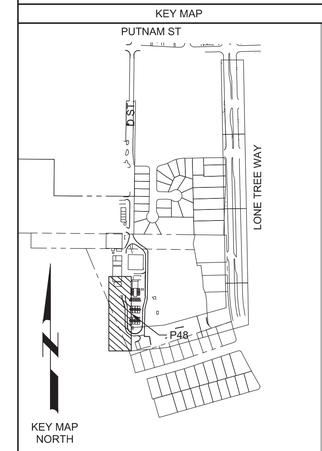

SCALE

0 10' 20' 40'
HORIZONTAL
0 2.5' 5' 10'
VERTICAL

REV	DATE	BY	DESCRIPTION
1	11-4-2020	MMB	REVISED PER ADDENDUM #3

DESIGNED JES
DRAWN ART
CHECKED JM
DATE SEPTEMBER 2020

Digitally signed by Jill E. Shankel
Contact Info: Carollo Engineers, Inc.
Date: 2020.11.04

REGISTERED PROFESSIONAL ENGINEER JILL E. SHANKEL No. 54604 CIVIL STATE OF CALIFORNIA

carollo

ANTIOCH CALIFORNIA OPPORTUNITY LIVES·HERE

CITY OF ANTIOCH
ANTIOCH BRACKISH WATER DESALINATION PROJECT
CIVIL
30" RAW WATER - PLAN AND PROFILE
STA 35+00 TO 40+00

VERIFY SCALES
BAR IS ONE INCH ON ORIGINAL DRAWING
0 1"
IF NOT ONE INCH ON THIS SHEET, ADJUST SCALES ACCORDINGLY

JOB NO. 10024A.10
DRAWING NO. P49
SHEET NO. 482 OF 498

Plot Date: 11/2/2020 10:55:54 AM
FILE NAME: 10024A10P49.dwg
PROJECT NO. 10024A10
LAST SAVED BY: atucker

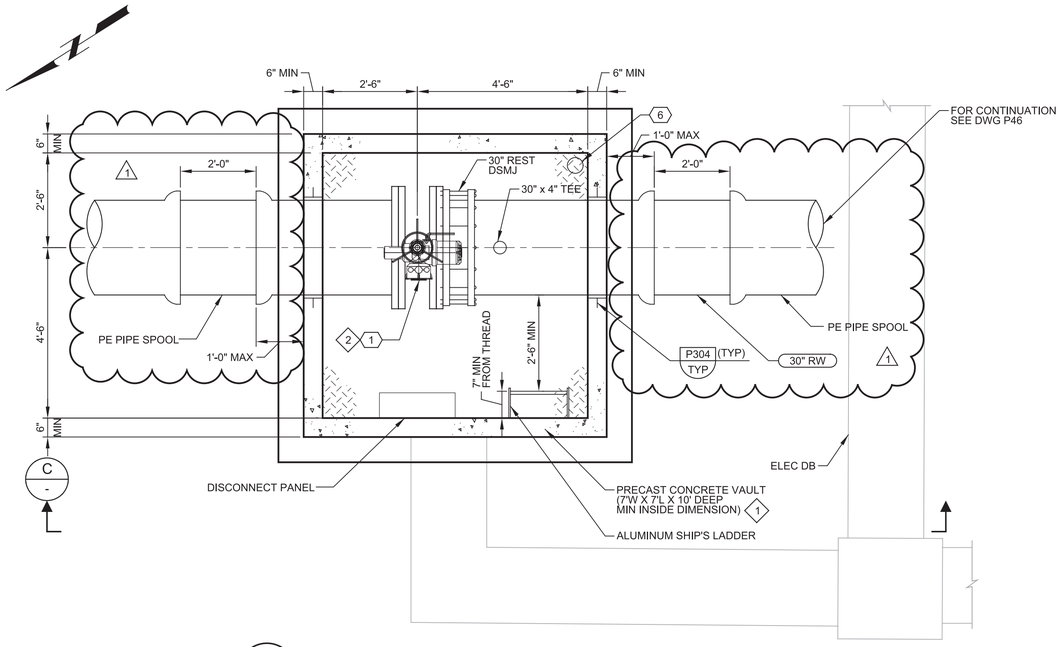

1 30" VALVE VAULT PLAN

P47

SCALE: 1/2"=1'-0"
FILE: 10024A1025M104

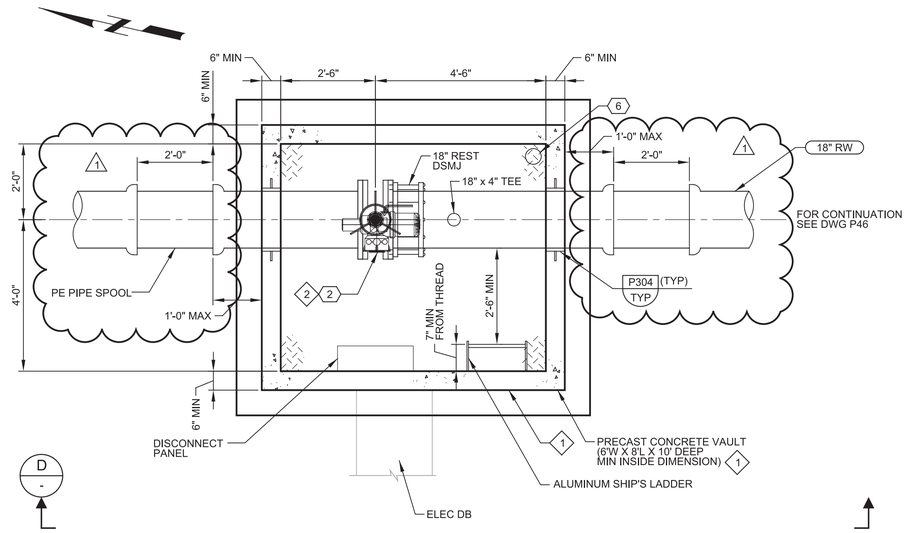

2 18" VALVE VAULT PLAN

P47

SCALE: 1/2"=1'-0"
FILE: 10024A1025M104

GENERAL NOTES:

1. SEE DRAWING G03 FOR GENERAL NOTES AND PIPELINE NOTES.

KEY NOTES:

1. PRECAST CONCRETE VAULT PER SECTION 02085 WITH CAST IN PLACE SLAB AND H-20 ACCESS HATCH PER SECTION 08320.
2. SEE ELECTRICAL DWGS FOR POWER AND CONTROL WIRING.
3. FILL OPENING WITH NON-SHRINK GROUT PER SECTION 03600.
4. PROVIDE 2 FOOT LONG SPOOL PIECE TO ACCOMMODATE SETTLEMENT AND EARTHQUAKE MOVEMENT. PIPE SHALL BE INSTALLED STRAIGHT WITHOUT HORIZONTAL OR VERICAL OFFSET. DO NOT USE JOINT ANGULAR DELFECTION TO MAKE UP FOR MISALIGNED PIPE. 1

KEY TAGS:

1	VAL-21.0601A	30" BFV 510 (FLANGED) W/MOTOR OPERATOR
2	VAL-21.0601B	18" BFV 510 (FLANGED) W/MOTOR OPERATOR
3	RWW-CARV-5	2" CARV 910
4	RWW-CARV-6	2" CARV 910
5	LE/LSH-21.0605	FLOAT SWITCH
6	LE/LSH-21.0606	FLOAT SWITCH

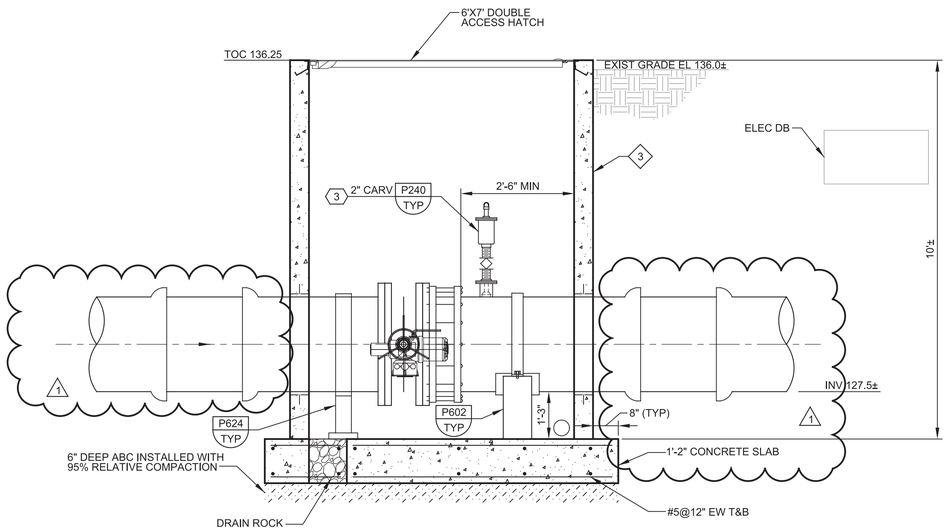

C 30" VALVE VAULT SECTION

-

SCALE: 1/2"=1'-0"
FILE: 10024A1025M304

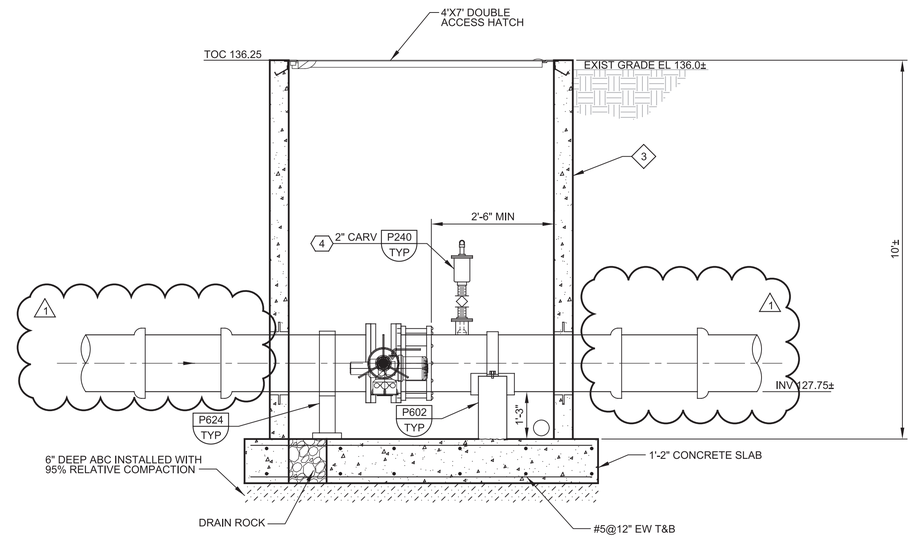

D 18" VALVE VAULT SECTION

-

SCALE: 1/2"=1'-0"
FILE: 10024A1025M304

REV	DATE	BY	DESCRIPTION
1	11-04-20	JES	REVISED PER ADDENDUM NO. 3

DESIGNED JES
DRAWN GL
CHECKED JM
DATE SEPTEMBER 2020

Digitally signed by Jill E. Shankel
Contact Info: Carollo Engineers, Inc.
Date: 2020.11.04

REGISTERED PROFESSIONAL ENGINEER JILL E. SHANKEL No. 54604 CIVIL STATE OF CALIFORNIA

carollo

ANTIOCH CALIFORNIA OPPORTUNITY LIVES·HERE

CITY OF ANTIOCH
ANTIOCH BRACKISH WATER DESALINATION PROJECT
CIVIL
RAW WATER PIPELINE DETAILS PLAN

VERIFY SCALES
BAR IS ONE INCH ON ORIGINAL DRAWING
0 1"
IF NOT ONE INCH ON THIS SHEET, ADJUST SCALES ACCORDINGLY

JOB NO. 10024A.10
DRAWING NO. P50
SHEET NO. 483 OF 498

PROJECT NO. 10024A10 FILE NAME: 10024A10P50.dgn

Plot Date: 03-NOV-2020 9:13:49 AM
User: svcPW
Model: Layout1 ColorTable: gsisade.ctb DesignScript: Carollo_Std_Pen_v0905.pen PlotScale: 1:1
LAST SAVED BY: gleal